S. 1ST AND STRAND STREET

ROAD AND UTILITY EXTENSIONS
CITY OF ST. HELENS

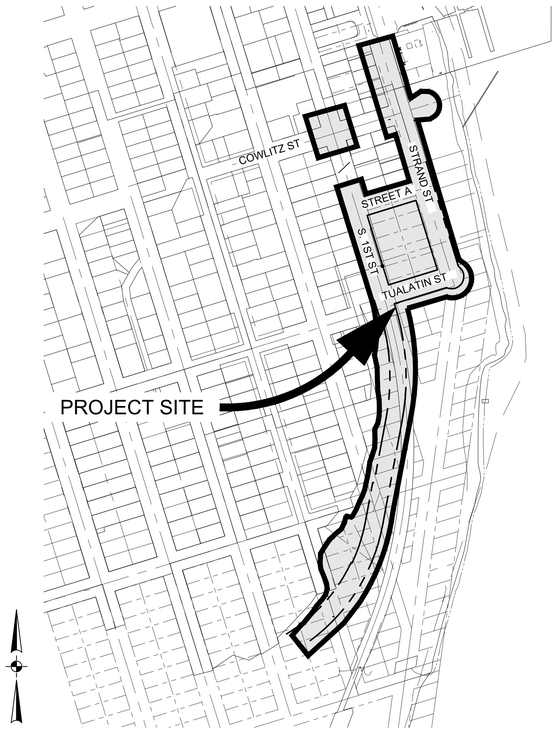

PROJECT MAP
N.T.S.

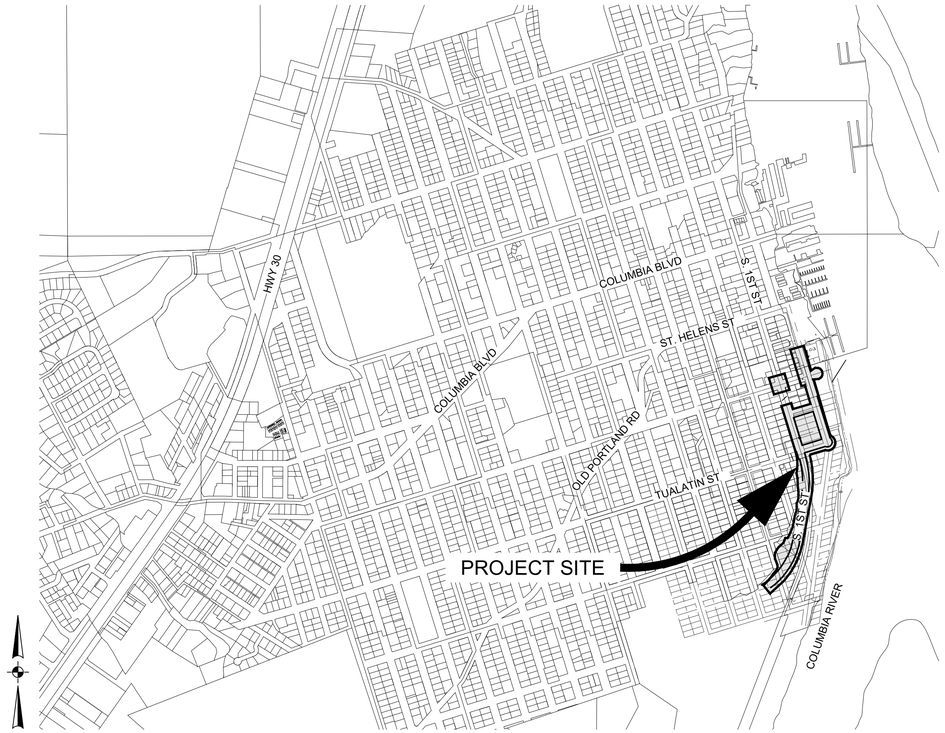

VICINITY MAP
N.T.S.

OWNER

NAME:	CITY OF ST. HELENS
CONTACT:	MOUHAMAD ZAHER, PE
ADDRESS:	265 STRAND STREET ST HELENS, OR 97051
PHONE:	(503) 366-8223

CIVIL ENGINEER

NAME:	OTAK INCORPORATED
CIVIL ENGINEER:	KEITH BUISMAN, P.E.
ADDRESS:	808 SW THIRD AVENUE, SUITE 800 PORTLAND, OR 97204
PHONE:	(503) 287-6825

SURVEYOR

NAME:	OTAK INCORPORATED
CONTACT:	SUE TSOI, PLS
ADDRESS:	808 SW THIRD AVENUE, SUITE 800 PORTLAND, OR 97204
PHONE:	(503) 287-6825

LANDSCAPE ARCHITECT

NAME:	MAYER/REED, INC.
CONTACT:	SHANNON SIMMS, ASLA, PLA
ADDRESS:	319 SW WASHINGTON STREET, SUITE 820 PORTLAND, OR 97204
PHONE:	(503) 223-5953

GEOTECHNICAL ENGINEER

NAME:	NV5
CONTACT:	SHAWN DIMKE, PE
ADDRESS:	703 BROADWAY STREET, SUITE 650 VANCOUVER, WA 98660
PHONE:	(360) 693-8416

ENVIRONMENTAL ENGINEER

NAME:	NV5
CONTACT:	COLBY HUNT, PE
ADDRESS:	9450 SW COMMERCE CIRCLE, SUITE 300 WILSONVILLE, OR 97070
PHONE:	(503) 968-3068

TRAFFIC ENGINEER

NAME:	DKS
CONTACT:	STEVE BOICE, PE
ADDRESS:	720 SW WASHINGTON STREET, SUITE 500 PORTLAND, OR 97205
PHONE:	(503) 243-3500

UTILITY ENGINEER

NAME:	LEEWAY ENGINEERING
CONTACT:	ROB LEE, PE
ADDRESS:	12597 NW MAJESTIC SEQUOIA WAY PORTLAND, OR 97229
PHONE:	(503) 828-7542

LIFT STATION ENGINEER

NAME:	GRAYLING ENGINEERING
CONTACT:	KYLE THOMPSON, PE
ADDRESS:	654 OFFICERS ROW VANCOUVER, WA 98660
PHONE:	(360) 977-3104

LOCATES
(48 HOUR NOTICE PRIOR TO EXCAVATION)

OREGON LAW REQUIRES YOU TO FOLLOW THE RULES ADOPTED BY THE OREGON UTILITY NOTIFICATION CENTER. THOSE RULES ARE SET FORTH IN OAR 952-001-0010 THROUGH OAR 952-001-0090. YOU MAY OBTAIN COPIES OF THE RULES FROM THE CENTER BY CALLING (503) 246-1987

Know what's below. Call before you dig.

ONE CALL SYSTEM 1-800-332-2344

PUBLIC WORKS SUPERVISOR, DAVE ELDER (503) 397-3532, MUST BE NOTIFIED 48 HOURS IN ADVANCE TO COORDINATE ANY TAPS OR WATER VALVE OPERATION. THE CONTRACTOR IS NOT ALLOWED TO OPERATE ANY WATER VALVES CONTROLLING FLOW TO NEW PIPING FROM THE CITY'S POTABLE WATER SYSTEM

CITY PROJECT NUMBERS:

P-525
R-706
S-673
W-477
SD-192

City of St. Helens FOUNDED 1850

REGISTERED PROFESSIONAL ENGINEER 72,629 OREGON JUNE 11, 2008 KEITH BUISMAN
PRELIMINARY
EXPIRES: 12/31/2023

Otak

Otak, Inc.
808 SW Third Avenue, Ste. 800
Portland, OR 97204
503. 287. 6825
www.otak.com

S. 1ST AND STRAND STREETS
ROAD AND UTILITY EXTENSIONS
ST. HELENS, OREGON
GENERAL
COVER SHEET

TITLE

#	DATE	DESCRIPTION

REVISIONS

NAVD88
DATUM

OTAK CAD — KJB
DRAWN BY — CHECKED BY

90% PLANS
STATUS

JANUARY 10, 2022
DATE

19823
PROJECT NUMBER

1

© 2021 OTAK, INC.

If this drawing is not 22" x 34", it has been reduced/enlarged. Scale accordingly.

Plotted: Jan 10, 2022 - 5:53pm keith.buisman L:\Project\19800\19823\CADD\ACAD\Dwgs\C19823C00.dwg Layout Name: 1

SHEET INDEX

SHEET NUMBER	SHEET TITLE
GENERAL	
1	COVER SHEET
1A	SHEET INDEX AND LEGEND
1B	PROJECT KEY MAPS
1C	GENERAL NOTES
STREET SECTION	
2A-1	STREET SECTIONS
2A-2	STREET SECTIONS
2A-3	STREET SECTIONS
DETAILS	
2B-1	STREET DETAILS
2B-2	STREET DETAILS
2B-3	STORM AND SANITARY SEWER DETAILS
2B-4	STORM AND SANITARY SEWER DETAILS
2B-5	WATER DETAILS
HORIZONTAL CONTROL PLANS	
2E-1	HORIZONTAL CONTROL PLAN
2E-2	HORIZONTAL CONTROL PLAN
CURB RETURNS	
2F-1	S. 1ST STREET & TUALATIN (SE RETURN)
2F-2	S. 1ST STREET & TUALATIN (NE RETURN)
2F-3	S. 1ST STREET & STREET A (NE RETURN)
2F-4	S. 1ST STREET & STREET A (SE RETURN)
2F-5	S. 1ST STREET & COWLITZ STREET (SW RETURN)
2F-6	S. 1ST STREET & COWLITZ STREET (NW RETURN)
2F-7	S. 1ST STREET & COWLITZ STREET (NE RETURN)
2F-8	S. 1ST STREET & COWLITZ STREET (SE RETURN)
2F-9	STRAND STREET & COWLITZ STREET (NW RETURN)
2F-10	STRAND STREET & COWLITZ STREET (SW RETURN)
2F-11	STRAND STREET & STREET A (SW RETURN)
2F-12	STRAND STREET & STREET A (NW RETURN)
2F-13	STRAND STREET & TUALATIN STREET (NW RETURN)
2F-14	STRAND STREET & TUALATIN STREET (EYEBROW)
2F-15	STRAND STREET & TUALATIN STREET (EYEBROW)
2F-16	STRAND STREET & PLAZA SQUARE
INTERSECTION PLANS	
2G-1	S. 1ST STREET & TUALATIN STREET
2G-2	S. 1ST STREET & STREET A
2G-3	S. 1ST STREET & COWLITZ STREET
2G-4	STRAND STREET & COWLITZ STREET
2G-5	STRAND STREET & STREET A
2G-6	STRAND STREET & TUALATIN STREET
PARKING CURB PLANS	
2H-1	S. 1ST STREET PARKING CURB PLAN
2H-2	S. 1ST STREET PARKING CURB PLAN
2H-3	S. 1ST STREET PARKING CURB PLAN
2H-4	S. 1ST STREET PARKING CURB PLAN
2H-5	S. 1ST STREET PARKING CURB PLAN
2H-6	S. 1ST STREET PARKING CURB PLAN
2H-7	STRAND STREET PARKING CURB PLAN
2H-8	STRAND STREET PARKING CURB PLAN
2H-9	STRAND STREET PARKING CURB PLAN
2H-10	TUALATIN STREET PARKING CURB PLAN
2H-11	STREET A PARKING CURB PLAN
2H-12	COWLITZ STREET PARKING CURB PLAN
EXISTING CONDITIONS AND DEMOLITION PLANS	
2J-1	EXISTING CONDITIONS AND DEMOLITION
2J-2	EXISTING CONDITIONS AND DEMOLITION
CONCRETE REINFORCEMENT PLANS	
2K-1	STRAND STREET
2K-2	COWLITZ STREET
STRUCTURAL PLANS	
2L-1	WALL EXTENSION PLAN AND DETAILS
2L-2	PUMP STATION FOUNDATION DETAILS
STREET AND STORM DRAIN PLAN AND PROFILE	
3A	S. 1ST STREET STA 13+25 TO 16+00
3B	S. 1ST STREET STA 16+00 TO 20+50
3C	S. 1ST STREET STA 20+50 TO 25+00
3D	S. 1ST STREET STA 25+00 TO 28+50
3E	S. 1ST STREET STA 28+50 TO 32+25
3F	S. 1ST STREET STA 32+25 TO 37+00
3G	STRAND STREET STA 9+50 TO 13+00
3H	STRAND STREET STA 13+00 TO 16+00
3J	STRAND STREET STA 16+00 TO 20+25
3K	TUALATIN ST STA 10+00 TO 12+80
3L	STREET A STA 10+00 TO 12+80
3M	COWLITZ STREET STA 8+50 TO 11+50
3N	COWLITZ STREET STA 11+50 TO 15+00

SHEET INDEX (cont.)

SHEET NUMBER	SHEET TITLE
3P	SD-3 STA 1+00 TO 3+50
3Q	SD-3 STA 3+50 TO 7+00
3R	SD-7 STA 0+50 TO 4+00
3S	SD-7 STA 4+00 TO 6+77
3T	SD-8 STA 1+00 TO 4+85
TRAIL PLANS	
4A-1	TRAIL ALIGNMENT A
4A-2	TRAIL ALIGNMENT B STA 4+77 TO 9+25
4A-3	TRAIL ALIGNMENT B STA 9+25 TO 13+75
4A-4	TRAIL ALIGNMENT B STA 13+75 TO 16+00
SITE MATERIALS PLANS	
L1.00	SITE MATERIALS KEY PLAN
L1.01	SITE MATERIALS PLANS
L1.02	SITE MATERIALS PLANS
L1.03	SITE MATERIALS PLANS
L1.04	SITE MATERIALS PLANS
L1.05	SITE MATERIALS PLANS
L1.06	SITE MATERIALS PLANS
L1.07	SITE MATERIALS PLANS
L1.08	SITE MATERIALS PLANS
SITE LAYOUT PLANS	
L1.32	SITE LAYOUT PLANS
L1.33	SITE LAYOUT PLANS
L1.34	SITE LAYOUT PLANS
L1.35	SITE LAYOUT PLANS
L1.36	SITE LAYOUT PLANS
L1.37	SITE LAYOUT PLANS
L1.38	SITE LAYOUT PLANS
SITE DETAILS	
L1.40	SITE DETAILS
L1.41	SITE DETAILS
L1.42	SITE DETAILS
L1.43	SITE DETAILS
L1.44	SITE DETAILS
IRRIGATION PLANS	
L2.00	IRRIGATION KEY PLAN
L2.01	IRRIGATION PLAN
L2.02	IRRIGATION PLAN
L2.03	IRRIGATION PLAN
L2.04	IRRIGATION PLAN
L2.05	IRRIGATION PLAN
L2.06	IRRIGATION PLAN
L2.07	IRRIGATION PLAN
L2.08	IRRIGATION PLAN
L2.09	IRRIGATION PLAN
L2.10	IRRIGATION PLAN
L2.11	IRRIGATION PLAN
L2.12	IRRIGATION PLAN
L2.40	IRRIGATION DETAILS
PLANTING PLANS	
L3.00	PLANTING KEY PLAN
L3.01	PLANTING PLANS
L3.02	PLANTING PLANS
L3.03	PLANTING PLANS
L3.04	PLANTING PLANS
L3.05	PLANTING PLANS
L3.06	PLANTING PLANS
L3.07	PLANTING PLANS
L3.08	PLANTING PLANS
L3.09	PLANTING PLANS
L3.10	PLANTING PLANS
L3.11	PLANTING PLANS
L3.12	PLANTING PLANS
L3.20	PLANTING SCHEDULE AND NOTES
L3.40	PLANTING DETAILS
ILLUMINATION PLANS	
IL1	ILLUMINATION LEGEND
IL2	ILLUMINATION PLAN
IL3	ILLUMINATION PLAN
IL4	ILLUMINATION PLAN
IL5	ILLUMINATION PLAN
IL6	ILLUMINATION PLAN
IL7	ILLUMINATION PLAN
IL8	ILLUMINATION PLAN
IL9	ILLUMINATION DETAILS
IL10	ILLUMINATION DETAILS
IL11	ILLUMINATION DETAILS
IL12	ILLUMINATION DETAILS

SHEET INDEX (cont.)

SHEET NUMBER	SHEET TITLE
SIGNING AND STRIPING PLANS	
SS1	SIGNING AND STRIPING LEGEND
SS2	SIGNING AND STRIPING PLAN
SS3	SIGNING AND STRIPING PLAN
SS4	SIGNING AND STRIPING PLAN
SS5	SIGNING AND STRIPING PLAN
SS6	SIGNING AND STRIPING PLAN
SS7	SIGNING AND STRIPING PLAN
SS8	SIGNING AND STRIPING PLAN
SS9	STRIPING DETAILS
SS10	SIGNING DETAILS
SS11	SIGNING DETAILS
SS12	SIGNING DETAILS
SS13	SIGNING DETAILS
SS14	SIGNING DETAILS
SS15	SIGNING DETAILS
SANITARY SEWER PLAN AND PROFILE	
SA-1	S. 1ST STREET STA 9+25 TO 13+25
SA-2	S. 1ST STREET STA 13+25 TO 16+00
SA-3	S. 1ST STREET STA 16+00 TO 20+50
SA-4	S. 1ST STREET STA 20+50 TO 25+00
SA-5	S. 1ST STREET STA 25+00 TO 28+50
SA-6	S. 1ST STREET STA 28+50 TO 32+25
SA-7	S. 1ST STREET STA 32+25 TO 36+75
SA-8	STRAND STREET STA 13+00 TO 16+00
SA-9	EXISTING PUMP STATION DEMO
FORCE MAIN PLAN AND PROFILE	
FM-1	S. 1ST STREET STA 9+25 TO 13+25
FM-2	S. 1ST STREET STA 13+25 TO 16+00
FM-3	S. 1ST STREET STA 16+00 TO 20+50
FM-4	DIVERSION BOX MODIFICATION
WATER PLAN AND PROFILE	
WA-1	S. 1ST STREET STA 9+25 TO 13+25
WA-2	S. 1ST STREET STA 13+25 TO 16+00
WA-3	S. 1ST STREET STA 16+00 TO 20+50
WA-4	S. 1ST STREET STA 20+50 TO 25+00
WA-5	S. 1ST STREET STA 25+00 TO 28+50
WA-6	S. 1ST STREET STA 28+50 TO 32+25
WA-7	S. 1ST STREET STA 32+25 TO 36+75
WA-8	STRAND STREET STA 9+50 TO 13+00
WA-9	STRAND STREET STA 13+00 TO 16+00
WA-10	TUALATIN STREET STA 10+00 TO 12+80
EROSION AND SEDIMENT CONTROL PLANS	
EC-00	COVER SHEET AND GENERAL NOTES
EC-10	EXISTING CONDITIONS AND DEMOLITION
EC-11	EXISTING CONDITIONS AND DEMOLITION
EC-20	GRADING CONSTRUCTION
EC-21	GRADING CONSTRUCTION
EC-22	STREET, UTILITY CONSTRUCTION PLAN
EC-23	STREET, UTILITY CONSTRUCTION PLAN
EC-30	DETAILS
PUMP STATION PLANS	
PS-1	PUMP STATION NOTES AND ABBREVIATIONS
PS-2	PUMP STATION DESIGN DATA
PS-3	PUMP STATION SITE PLAN
PS-4	PUMP STATION GRADING AND SURFACING PLAN
PS-5	PUMP STATION MECHANICAL PLAN
PS-6	PUMP STATION SECTION A - WETWELL & VAULT
PS-7	PUMP STATION SECTION B - VAULT
PS-8	PUMP STATION DETAILS I
PS-9	PUMP STATION DETAILS II
PS-10	PUMP STATION DETAILS III
PS-11	PLUMBING AND MECHANICAL PLAN
PUMP STATION ELECTRICAL PLANS	
E1.00	ELECTRICAL LEGEND AND ABBREVIATIONS
E2.00	ELECTRICAL ONE-LINE, SCHEMATIC, & DETAILS
E3.00	ELECTRICAL SITEPLAN
E4.00	ELECTRICAL SCHEDULES
E5.00	ELECTRICAL DETAILS
E6.00	ELECTRICAL WIRING DIAGRAMS
E7.00	DISCONNECT PANEL WIRING & LAYOUT
PUMP STATION BUILDING PLANS	
A1	ABBREVIATIONS SYMBOLS AND GENERAL NOTES
A2	FLOOR & ROOF PLANS, CONNECTION DETAILS
A3	BUILDING ELEVATIONS & SECTION

LEGEND:

SOME SYMBOLS SHOWN MAY NOT BE USED ON MAP

EXISTING

- DECIDUOUS TREE
- EVERGREEN TREE
- STORM SEWER MANHOLE
- SANITARY SEWER CLEANOUT
- CATCH BASIN
- SANITARY SEWER MANHOLE
- WV — WATER VALVE
- W — WATER METER
- FIRE HYDRANT
- BOLLARD
- GV — GAS VALVE
- G — GAS METER
- SIGN
- MAILBOX
- UTILITY POLE
- LIGHT POLE
- E — ELECTRIC VAULT
- PROPERTY LINE
- UTILITY AND LIGHT POLE
- GUY WIRE
- P — ELECTRICAL POWER PEDESTAL
- C — COMMUNICATIONS PEDESTAL
- T — COMMUNICATIONS MANHOLE
- OHL — OVERHEAD LINE
- G — GAS LINE
- XE — ELECTRICAL LINE
- XCOM — COMMUNICATIONS LINE
- SA — SANITARY SEWER LINE
- ST — STORM DRAIN LINE
- WA — WATER LINE
- FENCELINE
- E — ELECTRIC RISER
- U — UTILITY RISER
- PROPERTY CORNER
- 396 — EXIST. 1' CONTOUR
- 400 — EXIST. 5' CONTOUR

PROPOSED

- SD — STORM LINE
- SD — STORM LATERAL
- SS — SANITARY LINE
- SS — SANITARY LATERAL
- W — WATER LINE
- SEWER MAINHOLE
- STORM MAINHOLE
- CURB
- CONCRETE SIDEWALK
- STREET CENTERLINE
- SAWCUT LINE
- 1 / 2A — STREET SECTION (SEE PLAN SHEETS AND SECTION SHEET 2A)
- STREET LIGHT
- FIRE HYDRANT
- TRAFFIC SIGN
- EASEMENT
- CLEAN OUT
- PROJECT LIMITS
- RIGHT OF WAY LINE
- CONCRETE DRIVEWAY
- CATCH BASIN
- RAMP SLOPE ARROW (7.2% MAX DESIGN)
- LANDING SLOPE ARROW (1.5% MAX DESIGN)
- 401 — PROPOSED 1' CONTOUR
- 400 — PROPOSED 5' CONTOUR
- PROPOSED CROSSWALK WITH STAMPED PAVEMENT
- GRIND/INLAY

ABBREVIATIONS

A.C.	ASPHALTIC CONCRETE
BCR	BEGIN CURB RETURN
BP	BEGINNING POINT
BZ	BUILDING ZONE
DW/Y	DRIVEWAY
ECR	END CURB RETURN
ELEV	ELEVATION
EP	END POINT
EZ	ENTRY ZONE
FB	FACE OF BUILDING
FL	FLOW LINE
FZ	FURNISHING ZONE
IE	INVERT ELEVATION
LF	LINEAL FEET
MWMAC	MINOR WARM MIX ASPHALTIC CONCRETE
N/A	NOT APPLICABLE
PC	POINT OF CURVATURE
PG	PLANTER GRADE
PL	PROPERTY LINE
PRC	POINT OF REVERSE CURVATURE
PT	POINT OF TANGENCY
PVI	POINT OF VERTICAL INTERSECTION
PZ	PEDESTRIAN ZONE
R/W	RIGHT OF WAY
STA	STATION
SW	SIDEWALK
TC	TOP OF CURB
TCD	TOP OF CHECK DAM
TP	TOP OF PLANTER
TPB	TOP OF PLANTER BOX CURB
TS	TOP OF SIDEWALK

City of St. Helens — FOUNDED 1850

REGISTERED PROFESSIONAL ENGINEER 72,629 OREGON JUNE 11, 2008 KEITH BUISMAN — PRELIMINARY

EXPIRES: 12/31/2023

Otak, Inc.
808 SW Third Avenue, Ste. 800
Portland, OR 97204
503. 287. 6825
www.otak.com

S. 1ST AND STRAND STREETS ROAD AND UTILITY EXTENSIONS

ST. HELENS, OREGON
GENERAL

SHEET INDEX AND LEGEND

TITLE

#	DATE	DESCRIPTION

REVISIONS

NAVD88
DATUM

OTAK CAD — KJB
DRAWN BY — CHECKED BY

90% PLANS
STATUS

JANUARY 10, 2022
DATE

19823
PROJECT NUMBER

1A

© 2021 OTAK, INC.

If this drawing is not 22" x 34", it has been reduced/enlarged. Scale accordingly.

Plotted: Jan 10, 2022 - 8:48am, keith.buisman L:\Projects\19800\19823\CADD\ACADD\dwg\C18823C00.dwg Layout Name: 1A

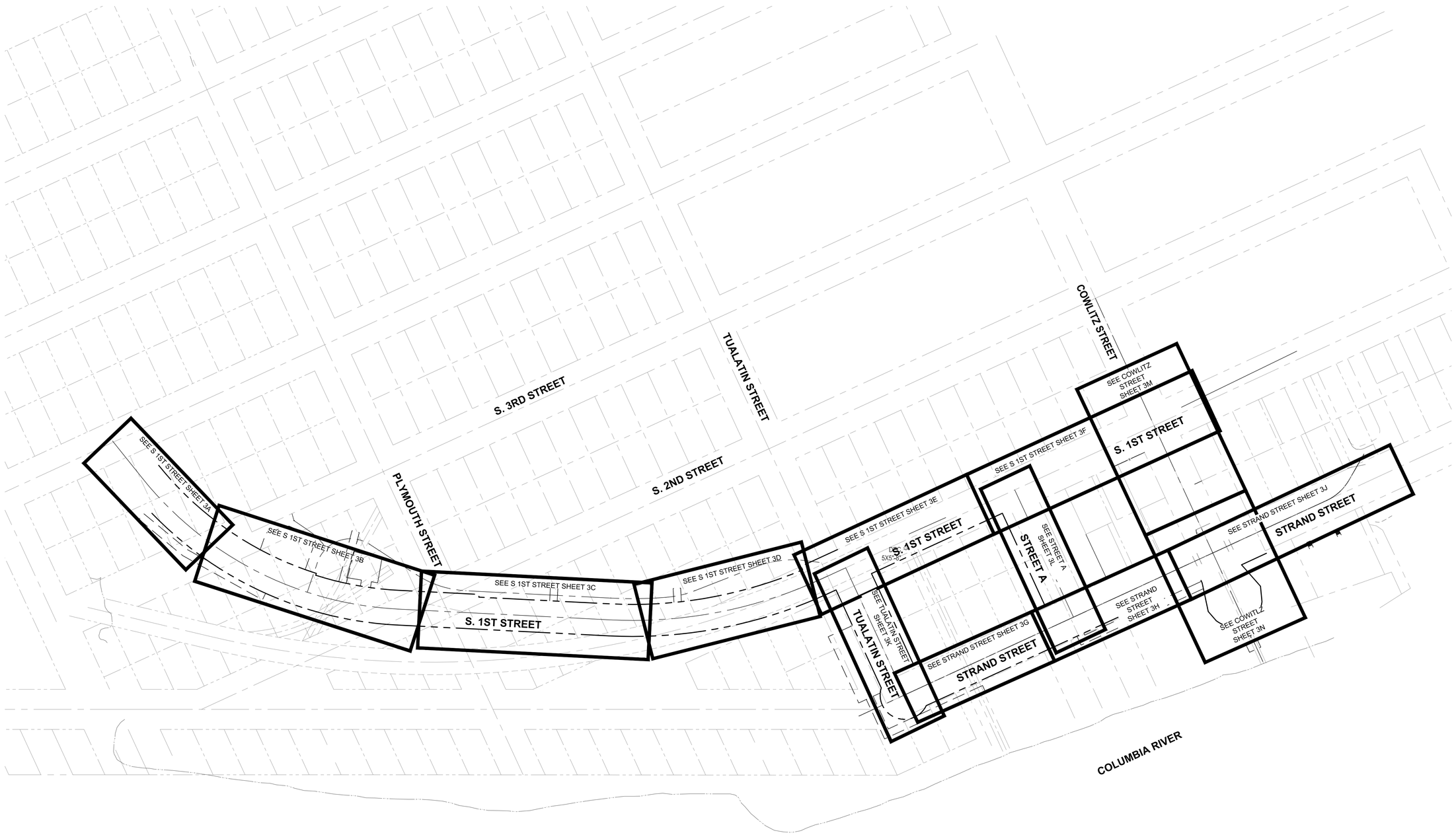

PROJECT KEY MAPS

0 100 200
SCALE IN FEET

City of St. Helens
FOUNDED 1850

REGISTERED PROFESSIONAL ENGINEER
72,629
OREGON
JUNE 11, 2008
KEITH BUISMAN
PRELIMINARY
EXPIRES: 12/31/2023

Otak

Otak, Inc.
808 SW Third Avenue, Ste. 800
Portland, OR 97204
503. 287. 6825
www.otak.com

S. 1ST AND STRAND STREETS ROAD AND UTILITY EXTENSIONS

ST. HELENS, OREGON
GENERAL

PROJECT KEY MAPS

TITLE

#	DATE	DESCRIPTION

REVISIONS

NAVD88
DATUM

OTAK CAD — KJB
DRAWN BY — CHECKED BY

90% PLANS
STATUS

JANUARY 10, 2022
DATE

19823
PROJECT NUMBER

1B

© 2021 OTAK, INC.

If this drawing is not 22" x 34", it has been reduced/enlarged. Scale accordingly.

Plotted: Jan 10, 2022 - 5:55pm keith.buisman L:\Project\19800\19823\CADD\ACAD\Dwg\C19823C1B.dwg Layout Name: 1B

GENERAL NOTES

1. ALL WORK SHALL BE IN ACCORDANCE WITH THE CURRENT AND APPLICABLE REGULATIONS, SPECIFICATIONS, CODES, AND REQUIREMENTS OF CITY OF ST. HELENS, THE OREGON STATE PLUMBING SPECIALTY CODE (UPC), AND THE OREGON STATE STRUCTURAL SPECIALTY CODE (OSSC).
2. THE CONTRACTOR SHALL PERFORM ALL WORK NECESSARY TO COMPLETE THIS PROJECT IN ACCORDANCE WITH THE PLANS INCLUDING SUCH INCIDENTALS AS MAY BE NECESSARY TO MEET APPLICABLE AGENCY REQUIREMENTS AND AS NECESSARY TO PROVIDE A COMPLETED PROJECT.
3. THE CONTRACTOR SHALL OBTAIN ALL REQUIRED PERMITS AND LICENSES PRIOR TO COMMENCING WORK ON THIS PROJECT.
4. THE CONTRACTOR SHALL KEEP A COPY OF ALL REQUIRED PERMITS AND AN APPROVED SET OF PLANS WITH ALL APPROVED REVISIONS ON THE PROJECT SITE AT ALL TIMES.
5. THE EXISTING AND APPROXIMATE LOCATION OF KNOWN UNDERGROUND UTILITIES OR STRUCTURES SHOWN ON THESE DRAWINGS WERE DETERMINED BY A SEARCH OF AVAILABLE PUBLIC RECORDS AND AS-BUILTS. THE LOCATIONS AND DEPTHS OF THESE UTILITIES ARE FROM THESE RECORDS AND ARE SHOWN FOR THE CONVENIENCE OF THE CONTRACTOR. NO RESPONSIBILITY IS ASSUMED BY EITHER THE CITY OR THE ENGINEER FOR ACCURACY OR COMPLETENESS OF THESE LOCATIONS.
6. THE CONTRACTOR SHALL PROTECT AND MAINTAIN ALL EXISTING UTILITIES ON THIS SITE AND IN ADJACENT STREETS. ANY DAMAGE TO EXISTING UTILITIES, WHETHER SHOWN OR NOT ON THIS DRAWING, SHALL BE REPAIRED / REPLACED AT THE CONTRACTOR'S EXPENSE AND TO THE SATISFACTION OF THE UTILITY OWNER. EXISTING SURFACE FEATURES AND FENCING DAMAGED BY CONTRACTOR SHALL BE REPLACED IN KIND TO THE SATISFACTION OF THE CITY.
7. THE CONTRACTOR SHALL HAVE ALL EXISTING UTILITIES LOCATED PRIOR TO STARTING ANY WORK.

   ATTENTION: OREGON LAW REQUIRES YOU TO FOLLOW RULES ADOPTED BY THE OREGON UTILITY NOTIFICATION CENTER. THOSE RULES ARE SET FORTH ON OAR 952-001-0010 THROUGH OAR 52-001-0090. YOU MAY OBTAIN COPIES OF THESE RULES FROM THE CENTER BY CALLING 503-232-1987. IF YOU HAVE ANY QUESTIONS ABOUT THE RULES, YOU MAY CONTACT THE CENTER.
8. THE CONTRACTOR SHALL NOTIFY ALL COMPANIES AND AGENCIES WITH UNDERGROUND FACILITIES IN THE PROJECT AREA 24 HOURS BEFORE COMMENCING CONSTRUCTION IN THEIR VICINITY.
9. THE CONTRACTOR SHALL BE RESPONSIBLE FOR COORDINATING THE RELOCATION OF BURIED AND OVERHEAD UTILITIES. NO SERVICE INTERRUPTIONS SHALL BE PERMITTED WITHOUT PRIOR WRITTEN AGREEMENT WITH THE UTILITY PROVIDER.
10. THE INSTALLATION OF NEW OR RELOCATION OF EXISTING ELECTRICAL, TELEPHONE, GAS, AND CABLE SERVICE SHALL BE COORDINATED BY THE CONTRACTOR WITH THE APPROPRIATE UTILITY COMPANY.
11. THE CONTRACTOR SHALL BE RESPONSIBLE FOR INSTALLATION OF UTILITY TRENCHES, CONDUIT, VAULTS, PADS, PEDESTALS, AND UTILITY TRENCH BACKFILL IN ACCORDANCE WITH STANDARD SPECIFICATIONS AND PLANS OF SERVICING UTILITIES (ELECTRICAL, TELEPHONE, GAS, AND CABLE).
12. ALL EXISTING SITE CONDITIONS AND ELEVATIONS SHOWN ON THESE DRAWINGS ARE FROM A TOPOGRAPHIC SURVEY. THE CONTRACTOR SHALL VISIT THE SITE AND VERIFY ALL EXISTING CONDITIONS AND ELEVATIONS. CONTRACTOR SHALL CONFIRM BENCHMARK LOCATION AND ELEVATION WITH SURVEYOR.
13. PROPERTY AND RIGHT-OF-WAY LINES SHOWN ARE FOR REFERENCE ONLY. THESE PLANS ARE NOT MEANT TO SERVE BOUNDARY SURVEY PURPOSES.
14. ANY ALTERATION OR VARIANCE FROM THESE PLANS, EXCEPT MINOR FIELD ADJUSTMENTS NEEDED TO MEET EXISTING FIELD CONDITIONS, SHALL BE APPROVED BY THE ENGINEER AND APPLICABLE REGULATORY AGENCY REPRESENTATIVE.
15. ANY CONSTRUCTION OBSERVATION BY CITY OF ST. HELENS, OR THE ENGINEER, SHALL NOT, IN ANY WAY, RELIEVE THE CONTRACTOR FROM ANY OBLIGATION TO PERFORM THE WORK IN STRICT COMPLIANCE WITH THE APPLICABLE CODES AND REGULATORY AGENCY REQUIREMENTS.
16. APPROVED EROSION CONTROL MEASURES SHALL BE IMPLEMENTED IN ACCORDANCE WITH REGULATORY AGENCY REQUIREMENTS. THE CONTRACTOR SHALL PROVIDE ALL MATERIAL, EQUIPMENT, AND PERSONNEL NECESSARY TO MAINTAIN SUCH EROSION PROTECTION MEASURES. ANY DAMAGE CAUSED BY EROSION SHALL BE CORRECTED BY THE CONTRACTOR AT ONCE.
17. THE CONTRACTOR SHALL MAINTAIN AND COORDINATE ACCESS TO ALL AFFECTED PROPERTIES.
18. ALL OPEN CUTTING OF EXISTING STREETS SHALL BE PATCHED WITH A.C., COLD (TEMPORARY) OR HOT MIX, AT THE CLOSE OF EACH WORK DAY. TRENCHES SHALL NOT BE LEFT OPEN OVERNIGHT.
19. DEMOLITION WORK SHALL INCLUDE REMOVAL OF ALL STUMPS AND VEGETATION DEBRIS. CONFORMANCE WITH ALL REGULATIONS AND PERMITTING REQUIREMENTS FOR SUCH WORK SHALL BE THE RESPONSIBILITY OF THE CONTRACTOR.
20. IT SHALL BE THE RESPONSIBILITY OF THE CONTRACTOR TO LOCATE AND COORDINATE THE REMOVAL AND/OR ABANDONMENT OF EXISTING UTILITIES OR PROPER FILLING OF THE UTILITIES (SEPTIC TANKS, LINES, ETC.) IF THEY ARE TO REMAIN. IT SHALL ALSO BE THE RESPONSIBILITY OF THE CONTRACTOR TO CONTACT THE STATE OF OREGON WATER MASTER 503-681-7018 TO APPROVE THE FILLING OF ANY SEPTIC TANKS AND REMOVAL OF ANY EXISTING WATER WELLS.
21. ALL SURVEY MONUMENTS ON THE SUBJECT SITE, OR THAT MAY BE SUBJECT TO DISTURBANCE WITHIN THE CONSTRUCTION AREA, OR THE CONSTRUCTION OF ANY OFF-SITE IMPROVEMENTS SHALL BE ADEQUATELY REFERENCED AND PROTECTED PRIOR TO COMMENCEMENT OF ANY CONSTRUCTION ACTIVITY. IF THE SURVEY MONUMENTS ARE DISTURBED, MOVED, RELOCATED, OR DESTROYED AS A RESULT OF ANY CONSTRUCTION, THE PROJECT SHALL, AT IT'S COST, RETAIN THE SERVICES OF A REGISTERED PROFESSIONAL LAND SURVEYOR IN THE STATE OF OREGON TO RESTORE THE MONUMENT TO ITS ORIGINAL CONDITION AND FILE THE NECESSARY SURVEYS AS REQUIRED BY OREGON STATE LAW. A COPY OF ANY RECORDED SURVEY SHALL BE SUBMITTED TO STAFF.

GENERAL UTILITY NOTES

1. ABANDONED STORM AND SANITARY SEWERS SHALL BE REMOVED IN THEIR ENTIRETY OR PIPE FULLY GROUTED. INSPECTION IS REQUIRED.
2. THE DEQ IS OPPOSED TO ANY OIL, GREASE, GASOLINE, ETC. DRAINED INTO ANY SANITARY SEWER OR STORM SEWER. DEQ WANTS ALL OIL, GASOLINE, GREASE, ETC. TO BE TREATED AS ANY OTHER HAZARDOUS WASTE WITH ON-SITE CONTAINMENT AND REMOVAL BY LICENSED HAZARDOUS WASTE DISPOSAL PROFESSIONALS. THE DEQ MAY ISSUE CITATIONS FOR INTRODUCING OIL, GAS, ETC. INTO A DRAINAGE SYSTEM THAT CONNECTS TO THE SANITARY SEWER OR THE STORM SEWER, THE FACT THAT AN OIL/WATER SEPARATOR IS INSTALLED INLINE WOULD NOT MAKE A DIFFERENCE. IT IS RECOMMENDED THAT THE DRAINS TO THE OIL/WATER SEPARATOR NOT BE INSTALLED.
3. THE UTILITY TAPS TO SERVE THIS PROJECT WILL BE INSPECTED UNDER THE ASSOCIATED PUBLIC IMPROVEMENT WORK.
4. THE EXCAVATION CONTRACTOR SHALL CALL THE OREGON UTILITY NOTIFICATION CENTER AT 503-232-1987 AT LEAST 48 HOURS, BUT NOT MORE THAN 10 BUSINESS DAYS BEFORE BEGINNING EXCAVATION. OREGON LAW REQUIRES YOU TO FOLLOW RULES ADOPTED BY THE OREGON UTILITY NOTIFICATION CENTER. THOSE RULES ARE SET FORTH IN OAR 952-001-0010 THROUGH OAR 952-001-0090. YOU MAY OBTAIN COPIES OF THE RULES BY CALLING THE ADMINISTRATIVE CENTER.

GRADING

1. PROJECT GRADING LIMITS SHALL BE ALL PROPERTY LINES AND STREET RIGHT-OF-WAY, UNLESS OTHERWISE SHOWN ON THE GRADING PLANS.
2. STRAIGHT GRADES SHALL BE CONSTRUCTED BETWEEN ALL FINISH GRADE ELEVATIONS AND/OR FINISH CONTOUR LINES SHOWN, UNLESS OTHERWISE NOTED.
3. ALL PROPOSED ELEVATIONS SHOWN SHALL BE CONSIDERED TO BE FINISH SURFACE ELEVATIONS UNLESS OTHERWISE NOTED. ALL SURFACES SHALL BE GRADED SMOOTH AND FREE OF IRREGULARITIES THAT MIGHT ACCUMULATE SURFACE WATER.
4. DUST ABATEMENT SHALL BE MAINTAINED BY ADEQUATE WATERING OF THE SITE.
5. CONTRACTOR TO REMOVE ALL UNSUITABLE MATERIAL, DEBRIS, AND ORGANIC MATERIAL WITHIN GRADING AND FILL LIMITS PRIOR TO FILL PLACEMENT. NEW FILL MATERIAL SHALL BE BENCHED INTO EXISTING GROUND IN ACCORDANCE WITH RECOMMENDATIONS IN THE GEOTECHNICAL REPORT.
6. THE REMOVAL OF UNSUITABLE MATERIAL SHALL BE DONE IN CONSULTATION WITH THE GEOTECHNICAL ENGINEER. UNSUITABLE MATERIAL SHALL BE DISPOSED OF AS DETERMINED BY THE GEOTECHNICAL ENGINEER. IF SUCH MATERIAL IS REMOVED FROM THE SITE IT SHALL BE REMOVED AT THE CONTRACTOR'S SOLE EXPENSE.
7. ALL CUT OR FILL SLOPES SHALL BE CONSTRUCTED AT NO STEEPER THAN TWO (2) HORIZONTAL TO ONE (1) VERTICAL UNLESS OTHERWISE SHOWN ON THE PLANS OR SPECIFIED IN THE GEOTECHNICAL REPORT.
8. IF SPRINGS OR GROUND WATER ARE ENCOUNTERED DURING CONSTRUCTION, THE CONTRACTOR SHALL ADVISE THE GEOTECHNICAL ENGINEER AND THE CIVIL ENGINEER OF THE CONDITION FOUND AND COORDINATE CONSTRUCTION ACTIVITIES IN A MANNER THAT WILL ALLOW THE ENGINEERS TIME TO REVIEW THE SITUATION AND PREPARE A PLAN TO PROPERLY DISPOSE OF THE WATER ENCOUNTERED.
9. THE CONTRACTOR SHALL BE RESPONSIBLE FOR ADJUSTING ALL CATCH BASINS, CLEANOUTS, MANHOLES, VAULTS, ETC., THAT ARE AFFECTED BY CONSTRUCTION AND/OR FILL TO FINISH GRADE. STORM DRAIN INLET STRUCTURES SHALL BE ADJUSTED SO WATER FLOWS INTO THE STRUCTURE WITHOUT PONDING.
10. ORGANIC MATERIAL (TREES, BRUSH, ROOTS, STUMPS, ETC.) SHALL BE REMOVED FROM THE SITE. STRIPPING SHALL GENERALLY BE 2 TO 5 INCHES, BUT MAY BE DEEPER IN WOODED AREAS. UNSUITABLE EXCESS STRIPPINGS SHALL BE DISPOSED OF BY THE CONTRACTOR. REMOVAL OF TOPSOIL WILL BE IN THE ORDER OF 12 TO 24 INCHES THICK. SEE GEOTECH REPORT FOR STRIPPING AND TOPSOIL REMOVALS.

SURVEY

1. HORIZONTAL DATUM: COORDINATES ARE ORCS COLUMBIA WEST ZONE
2. VERTICAL DATUM: NAVD88
3. UNITS: INTERNATIONAL FEET

City of St. Helens
FOUNDED 1850

PRELIMINARY

Otak

Otak, Inc.
808 SW Third Avenue, Ste. 800
Portland, OR 97204
503. 287. 6825
www.otak.com

S. 1ST AND STRAND STREETS
ROAD AND UTILITY EXTENSIONS
ST. HELENS, OREGON
GENERAL

GENERAL NOTES

TITLE

#	DATE	DESCRIPTION

REVISIONS

NAVD88
DATUM

OTAK CAD — KJB
DRAWN BY — CHECKED BY

90% PLANS
STATUS

JANUARY 10, 2022
DATE

19823
PROJECT NUMBER

1C

© 2021 OTAK, INC.

If this drawing is not 22" x 34", it has been reduced/enlarged. Scale accordingly.

Plotted: Jan 10, 2022 - 5:55pm keith.buisman L:\Project\19800\19823\CADD\ACAD\Dwg\C19823C1C.dwg Layout Name: 1C

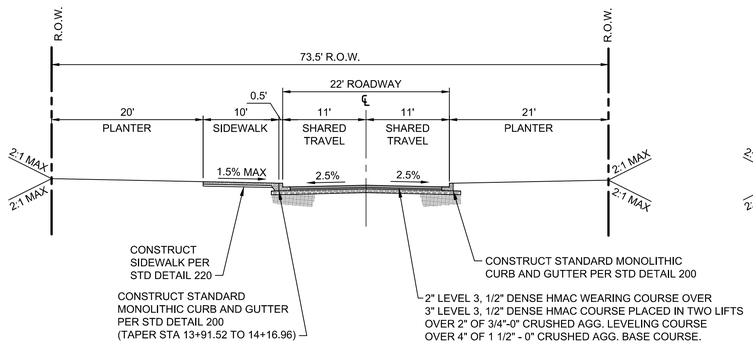

1 S. 1ST STREET
(STA 13+92 TO 14+92)
SCALE: 1" = 10'

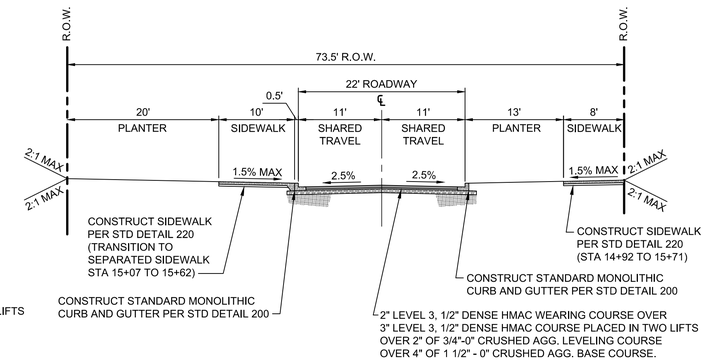

2 S. 1ST STREET
(STA 14+92 TO 16+14)
SCALE: 1" = 10'

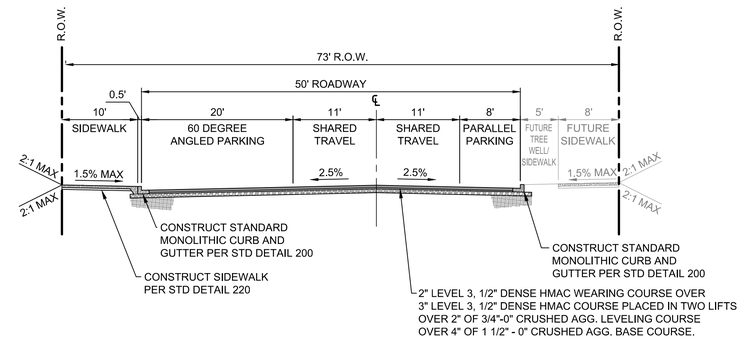

3 S. 1ST STREET
(STA 16+14 TO 17+88)
SCALE: 1" = 10'

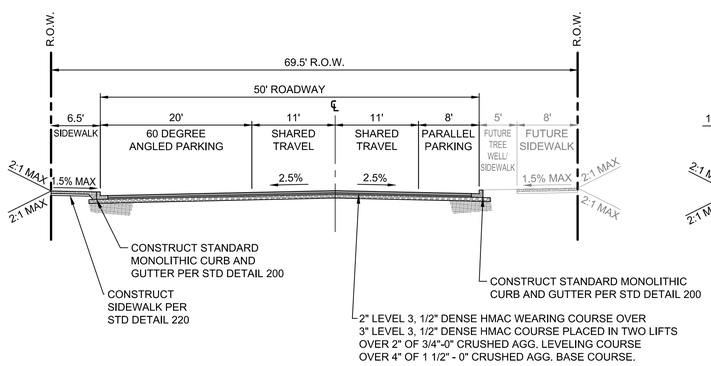

4 S. 1ST STREET
(STA 18+86 TO 21+04)
SCALE: 1" = 10'

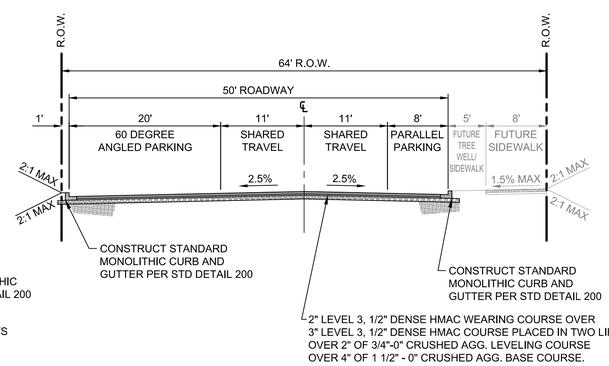

5 S. 1ST STREET
(STA 21+79 TO 25+08, 25+95 TO 28+55)
SCALE: 1" = 10'

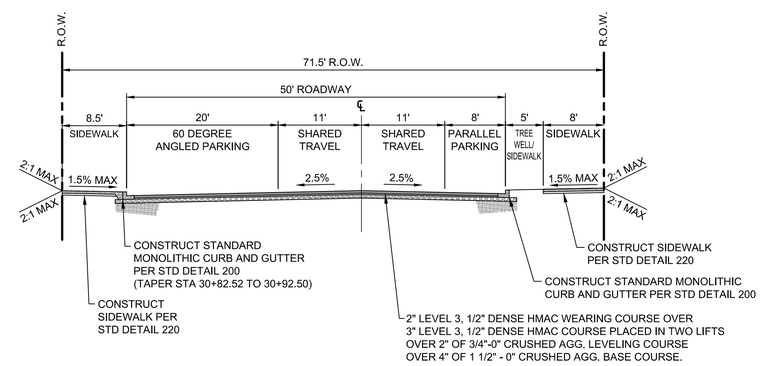

6 S. 1ST STREET
(STA 28+55 TO 30+93)
SCALE: 1" = 10'

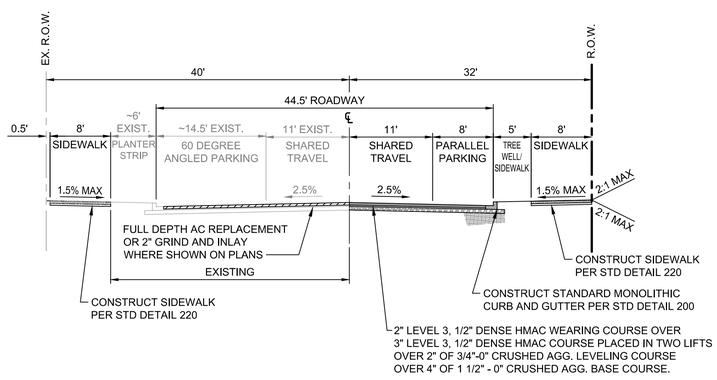

7 S. 1ST STREET
(STA 30+93 TO 31+81)
SCALE: 1" = 10'

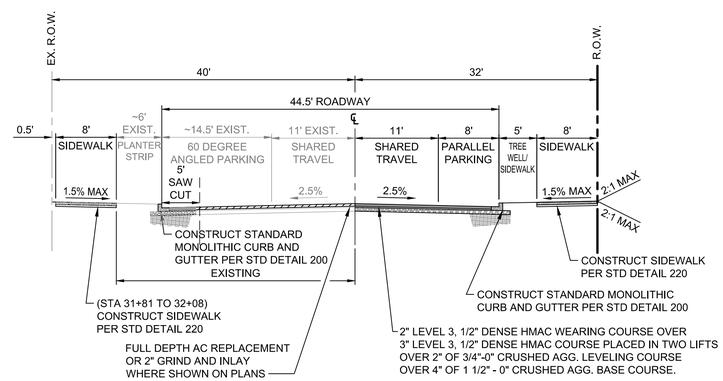

8 S. 1ST STREET
(STA 31+81 TO 33+19)
SCALE: 1" = 10'

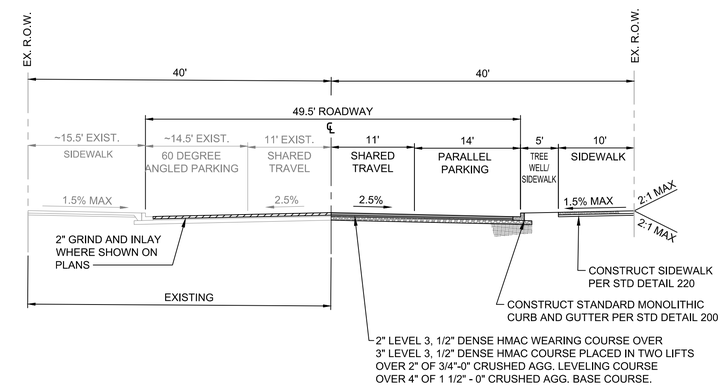

9 S. 1ST STREET
(STA 33+19 TO 34+17)
SCALE: 1" = 10'

City of St. Helens
FOUNDED 1850

REGISTERED PROFESSIONAL ENGINEER
72,629
PRELIMINARY
OREGON
JUNE 11, 2022
KEITH BUISMAN
EXPIRES: 12/31/2023

Otak
Otak, Inc.
808 SW Third Avenue, Ste. 800
Portland, OR 97204
503. 287. 6825
www.otak.com

S. 1ST AND STRAND STREETS ROAD AND UTILITY EXTENSIONS

ST. HELENS, OREGON
STREET SECTION

STREET SECTIONS

TITLE

#	DATE	DESCRIPTION

REVISIONS

NAVD88
DATUM

OTAK CAD — KJB
DRAWN BY — CHECKED BY

90% PLANS
STATUS

JANUARY 10, 2022
DATE

19823
PROJECT NUMBER

2A-1

© 2021 OTAK, INC.

If this drawing is not 22" x 34", it has been reduced/enlarged. Scale accordingly.

Plotted: Jan 10, 2022 - 5:55am, keith.buisman L:\Project\19800\19823\CAD\ACAD\Dwg\C19823C2A.DWG Layout Name: 2A-1

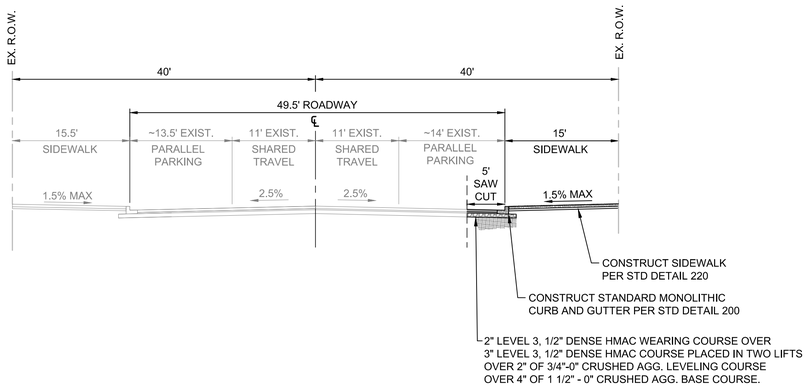

10 S. 1ST STREET
(STA 34+17 TO 34+61)
SCALE: 1" = 10'

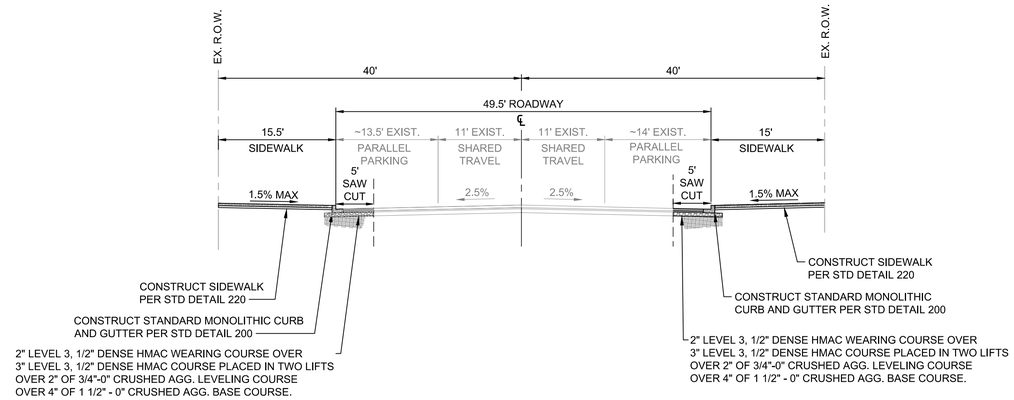

11 S. 1ST STREET
(STA 34+61 TO 36+72)
SCALE: 1" = 10'

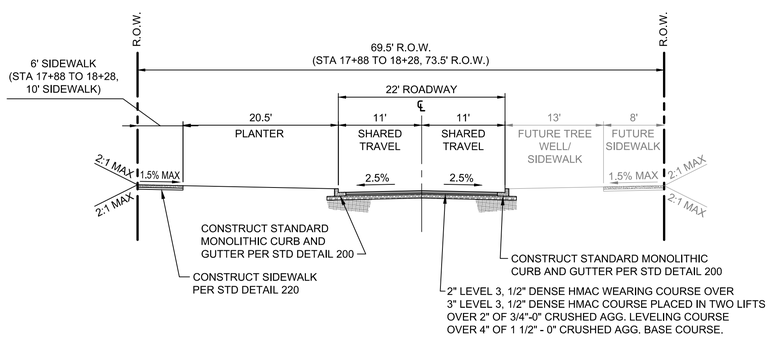

12 S. 1ST STREET
(STA 17+88 TO 18+86, 21+04 TO 21+79)
SCALE: 1" = 10'

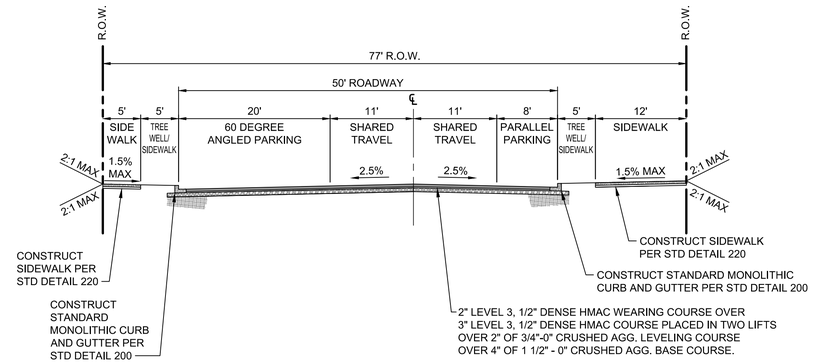

13 TUALATIN STREET
(STA 10+00 TO 12+80)
SCALE: 1" = 10'

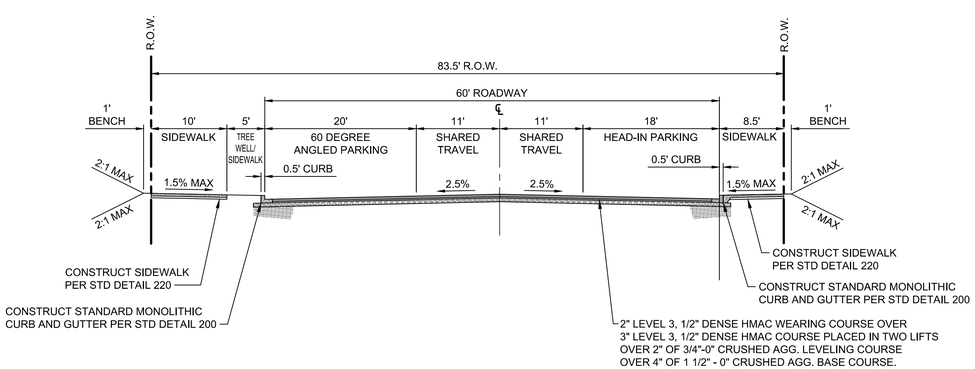

14 STRAND STREET
(STA 10+00 TO 14+67)
SCALE: 1" = 10'

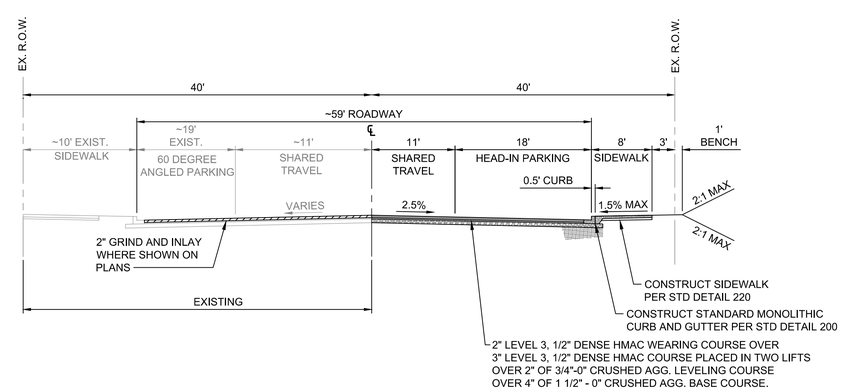

15 STRAND STREET
(STA 14+67 TO 17+07)
SCALE: 1" = 10'

City of St. Helens FOUNDED 1850

REGISTERED PROFESSIONAL ENGINEER 72,629 OREGON JUNE 11, 2008 KEITH BUISMAN
PRELIMINARY
EXPIRES: 12/31/2023

Otak
Otak, Inc.
808 SW Third Avenue, Ste. 800
Portland, OR 97204
503. 287. 6825
www.otak.com

S. 1ST AND STRAND STREETS ROAD AND UTILITY EXTENSIONS

ST. HELENS, OREGON
STREET SECTION

STREET SECTIONS

TITLE		
#	DATE	DESCRIPTION

REVISIONS

NAVD88
DATUM

OTAK CAD — KJB
DRAWN BY — CHECKED BY

90% PLANS
STATUS

JANUARY 10, 2022
DATE

19823
PROJECT NUMBER

2A-2

© 2021 OTAK, INC.

If this drawing is not 22" x 34", it has been reduced/enlarged. Scale accordingly.

Plotted: Jan 10, 2022 - 5:55pm keith.buisman L:\Project\19800\19823\CADD\ACAD\Dwg\C19823C2A.DWG Layout Name: 2A-2

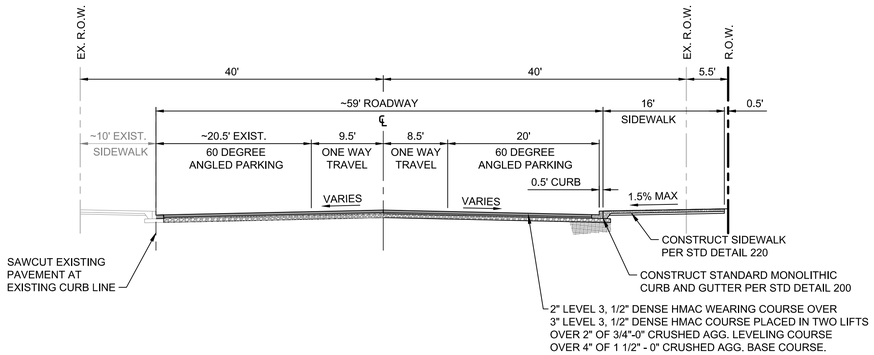

16 STRAND STREET
(STA 17+23 TO 18+03)
SCALE: 1" = 10'

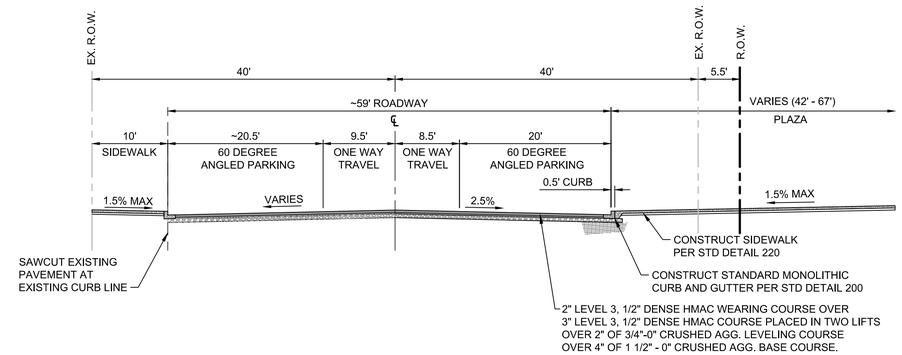

17 STRAND STREET
(STA 18+03 TO 19+50)
SCALE: 1" = 10'

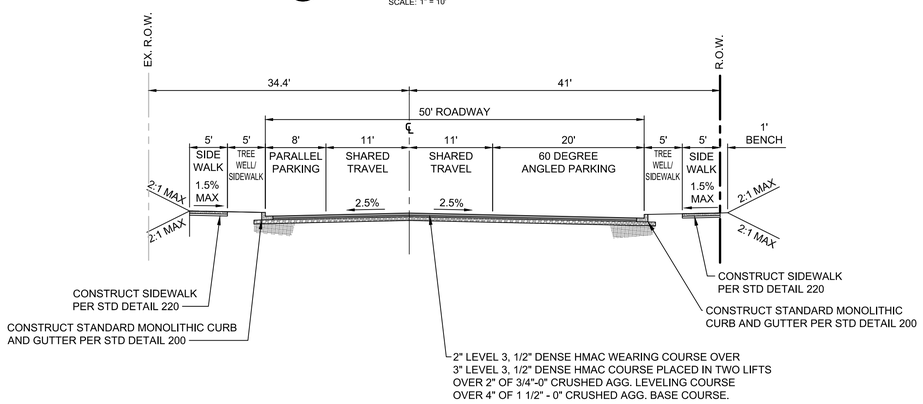

18 STREET A
(STA 10+00 TO 12+80)
SCALE: 1" = 10'

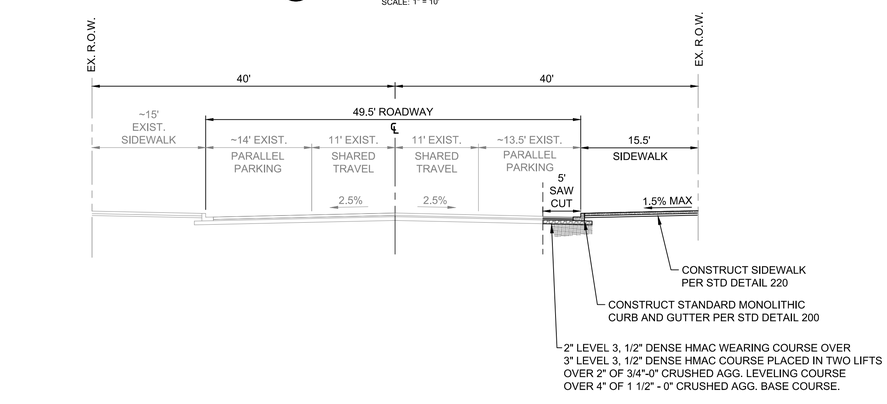

19 COWLITZ STREET
(STA 8+27 TO 8+61)
SCALE: 1" = 10'

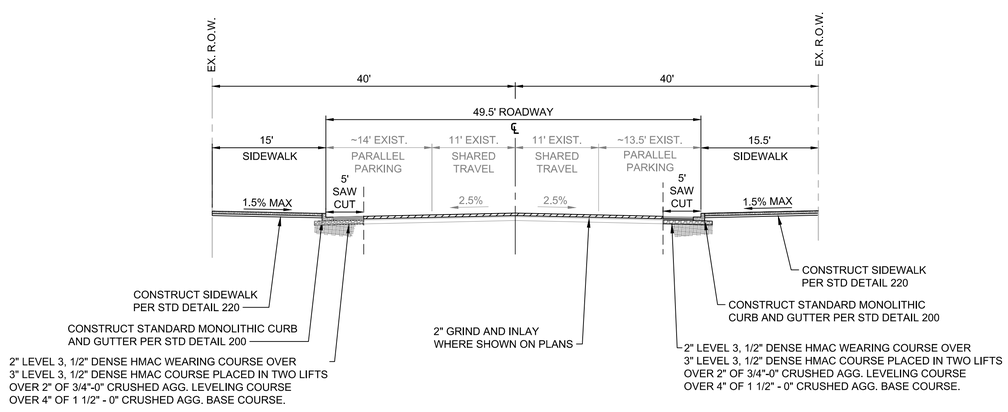

20 COWLITZ STREET
(STA 8+61 TO 10+00)
SCALE: 1" = 10'

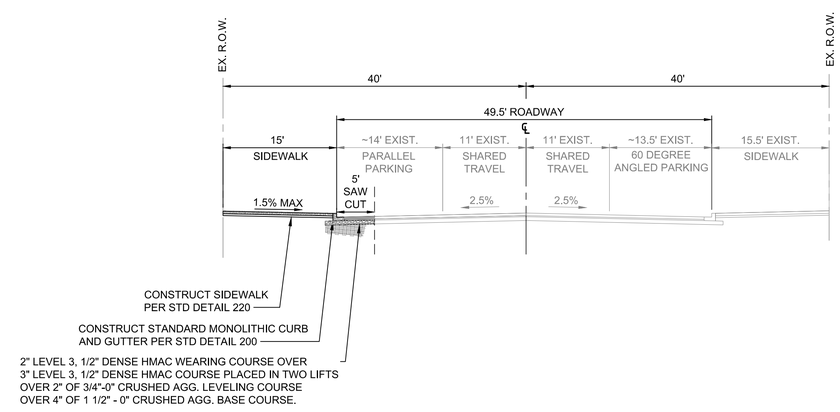

21 COWLITZ STREET
(STA 10+00 TO 10+81)
SCALE: 1" = 10'

City of St. Helens
FOUNDED 1850

REGISTERED PROFESSIONAL ENGINEER
72,629
PRELIMINARY
OREGON
JUNE 11, 2008
KEITH BUISMAN
EXPIRES: 12/31/2023

Otak
Otak, Inc.
808 SW Third Avenue, Ste. 800
Portland, OR 97204
503. 287. 6825
www.otak.com

S. 1ST AND STRAND STREETS ROAD AND UTILITY EXTENSIONS
ST. HELENS, OREGON
STREET SECTION

STREET SECTIONS

TITLE

#	DATE	DESCRIPTION

REVISIONS

NAVD88
DATUM

OTAK CAD — KJB
DRAWN BY — CHECKED BY

90% PLANS
STATUS

JANUARY 10, 2022
DATE

19823
PROJECT NUMBER

2A-3

© 2021 OTAK, INC.

If this drawing is not 22" x 34", it has been reduced/enlarged. Scale accordingly.

Plotted: Jan 10, 2022 - 5:55am, keith.buisman L:\Project\19800\19823\CAD\ACAD\Dwg\C19823C2A.DWG Layout Name: 2A-3

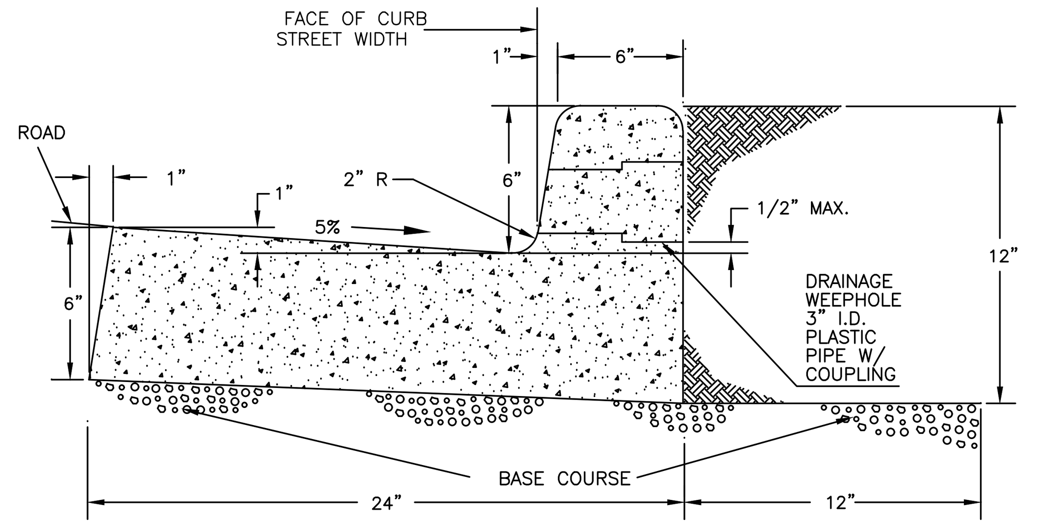

NOTES:

1. FOR USE ALONG MEDIANS, GUTTERS MAY BE REDUCED WITH PRIOR APPROVAL FROM THE CITY ENGINEER.
2. CONCRETE TO HAVE A COMPRESSIVE STRENGTH OF 3300 P.S.I. AT 28 DAYS.
3. CONTRACTION JOINTS
   A. SPACING TO BE NOT MORE THAN 15 FEET.
   B. THE DEPTH OF THE JOINT SHALL BE AT LEAST 1-1/2 INCHES.
   C. WEEPHOLES TO BE CENTERED WITH CONTRACTION JOINTS.
4. BASE ROCK 1 1/2"-0 OR 3/4"-0, 95% (AASHTO T-180) COMPACTION. BASE ROCK SHALL BE TO SUBGRADE OF STREET STRUCTURE OR 4 INCHES, WHICHEVER IS GREATER, AND SHALL EXTEND 12" BEHIND THE CURB.
5. DRAINAGE WEEPHOLE -3" DIAMETER PLASTIC PIPE
   A. I.D. PLASTIC PIPE WITH COUPLING.
   B. DRAINAGE ACCESS THROUGH EXISTING CURBS SHALL BE CORE DRILLED.
6. ALL RADII SHALL BE 3/4" EXCEPT AS OTHERWISE SHOWN.

DRAWN BY: T. KOLLN	CITY OF ST.HELENS 265 THE STRAND, ST.HELENS, OR 97051 PH (503)397-6272 FAX (503)397-4016	REVISION: NC
CHECKED BY:		
DATE:		
SCALE:	TITLE: STANDARD MONOLITHIC CURB AND GUTTER	DRAWING NO: 200

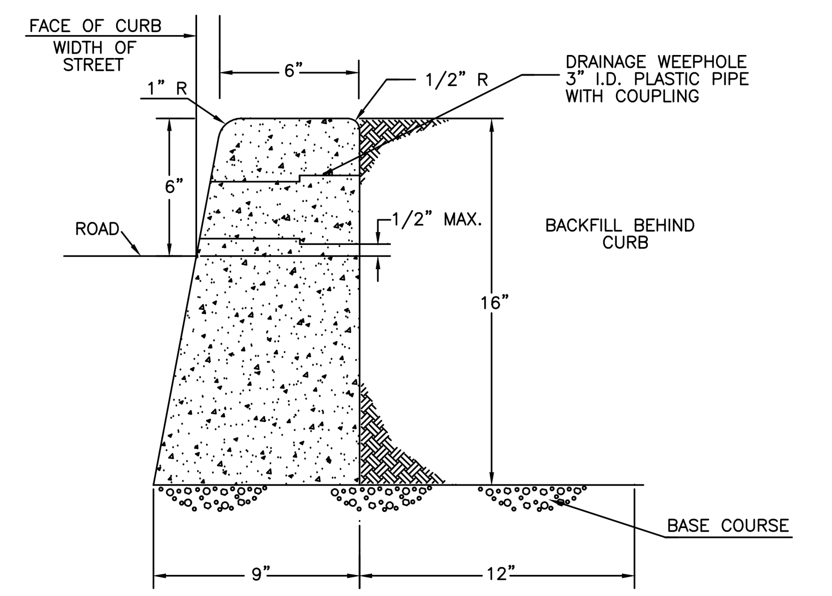

NOTES:

1. THIS DETAIL TO BE USED ONLY WHEN REPLACING LIKE CURB. NOT INTENDED FOR NEW CONSTRUCTION UNLESS SPECIFICALLY APPROVED BY THE CITY ENGINEER.
2. CONCRETE TO HAVE COMPRESSIVE STRENGTH OF 3300 P.S.I. AFTER 28 DAYS.

   EXPANSION JOINTS.
   A. TO BE PROVIDED:
      1) AT EACH POINT OF TANGENCY OF THE CURB.
      2) AT EACH COLD JOINT.
      3) AT EACH SIDE OF INLET STRUCTURES.
      4) AT EACH END OF DRIVEWAYS.
   B. MATERIAL TO BE PRE-MOLDED, ASPHALT IMPREGNATED, NON-EXTRUDING, WITH A THICKNESS OF 1/2 INCH.
3. CONTRACTION JOINTS.
   A. SPACING TO BE NOT MORE THAN 15 FEET.
   B. THE DEPTH OF THE JOINT SHALL BE AT LEAST 1-1/2 INCHES.
   C. WEEPHOLE TO BE CENTERED WITH CONTRACTION JOINTS.
4. BASE ROCK 1 1/2"-0 OR 3/4"-0, 95% (AASHTO T-180) COMPACTION. BASE ROCK SHALL BE TO SUBGRADE OF STREET STRUCTURE OR 4" IN DEPTH, WHICHEVER IS GREATER. SUBGRADE ROCK TO EXTEND 12" BEHIND CURB.
5. DRAINAGE WEEPHOLE - 3" DIA. PLASTIC PIPE.
   A. I.D. PLASTIC PIPE WITH COUPLING.
   B. DRAINAGE ACCESS THROUGH EXISTING CURBS SHALL BE CORE DRILLED.

DRAWN BY: T. KOLLN	CITY OF ST.HELENS 265 THE STRAND, ST.HELENS, OR 97051 PH (503)397-6272 FAX (503)397-4016	REVISION: NC
CHECKED BY: .		
DATE: .		
SCALE: .	TITLE: TYPE 'A' CURB - (ON SPECIAL APPLICATION)	DRAWING NO: 210

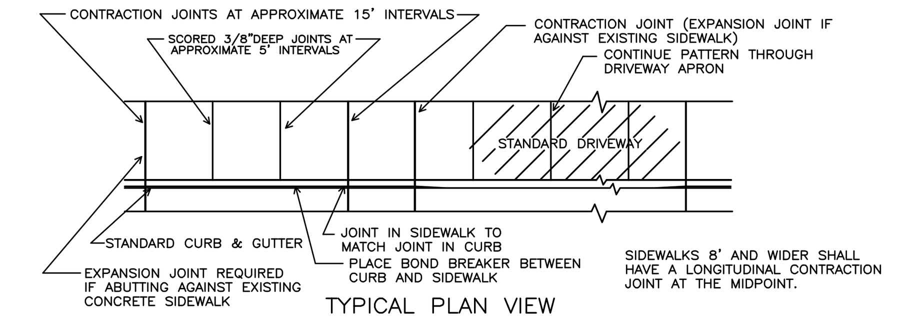

TYPICAL PLAN VIEW

NOTES:

1) STANDARD SIDEWALK CROSS SLOPE SHALL BE 1/4"/FOOT. WHEN THE LOT IS BELOW THE TOP OF THE CURB AND SLOPES DOWN FROM THE CURB A MINUS 1/4"/FOOT SLOPE MAY BE REQUIRED.
2) CONCRETE DEPTH FOR STANDARD SIDEWALKS SHALL BE NOMINAL 4" MIN. DRIVEWAY SECTIONS INCLUDING SIDEWALKS THROUGH DRIVEWAYS SHALL BE NOMINAL 6" MIN.
3) EXPANSION JOINTS WITH PREMOLDED FILLER SHALL BE INSTALLED BETWEEN DRIVEWAYS AND SIDEWALK AT THE DIRECTION OF THE ENGINEER. (SEE DRIVEWAY DETAILS) CONTRACTION JOINTS SHALL BE INSTALLED AT APPROXIMATE INTERVALS OF 15 FEET BY CUTTING AT LEAST 1/3 OF THE DEPTH OF THE CONCRETE. "DUMMY" JOINTS SHALL BE INSTALLED AT APPROXIMATE INTERVALS OF 5 FEET.
4) INSTALL A BOND BREAKER OR ISOLATION JOINT BETWEEN BACK OF CURB AND SIDEWALK, AND AROUND ANY OBSTRUCTION WITHIN SIDEWALK AREA.
5) SEE STANDARD WHEEL CHAIR/BICYCLE RAMP DETAILS FOR SIDEWALK PATTERNS AT INTERSECTION CURB RETURNS
6) SEE, ALSO, STANDARD DETAILS FOR DRIVEWAYS. NO. 242
7) WHEN USED IN CONJUNCTION WITH MOUNTABLE CURB IN CUL-DE-SAC'S LESS THAN 45' IN RADIUS, 6" THICK SIDEWALK IS REQ'D
8) SIDE WALK WIDTHS SHALL BE: 6-FT MINIMUM ON COLLECTOR STREETS; 5-FT MINIMUM ON RESIDENTIAL STREETS.

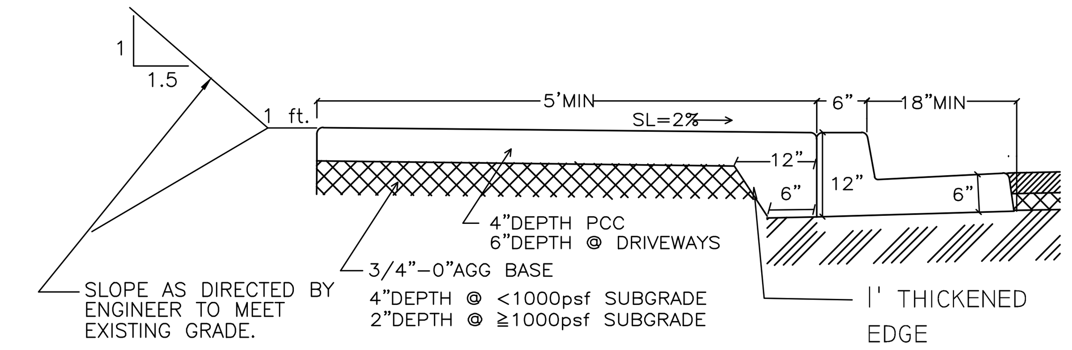

1. CONCRETE TO HAVE A BREAKING STRENGTH OF 3300 PSI AFTER 28 DAYS.
2. PCC CONTRACTION JOINTS
   A. SPACING TO BE 15 FEET OR LESS.
   B. DEPTH TO BE AT LEAST 1 1/2".
   C. TO BE CENTERED OVER ANY WEEPHOLES.
3. PCC EXPANSION JOINTS
   A. TO BE PROVIDED:
      1. AT EACH POINT OF TANGENCY OF THE CURB.
      2. AT EACH COLD JOINT.
      3. AT EACH SIDE OF INLET STRUCTURES.
      4. AT EACH END OF DRIVEWAYS.
   B. MATERIAL TO BE PRE-MOLDED, ASPHALT IMPREGNATED, NONEXTRUDING, 1/2" THICK.
4. SEE DETAIL FOR CURB & GUTTER

DRAWN BY: T. KOLLN	CITY OF ST.HELENS 265 THE STRAND, ST.HELENS, OR 97051 PH (503)397-6272 FAX (503)397-4016	REVISION: NC
CHECKED BY:		
DATE:		
SCALE:	TITLE: SIDEWALK DETAILS	DRAWING NO: 220

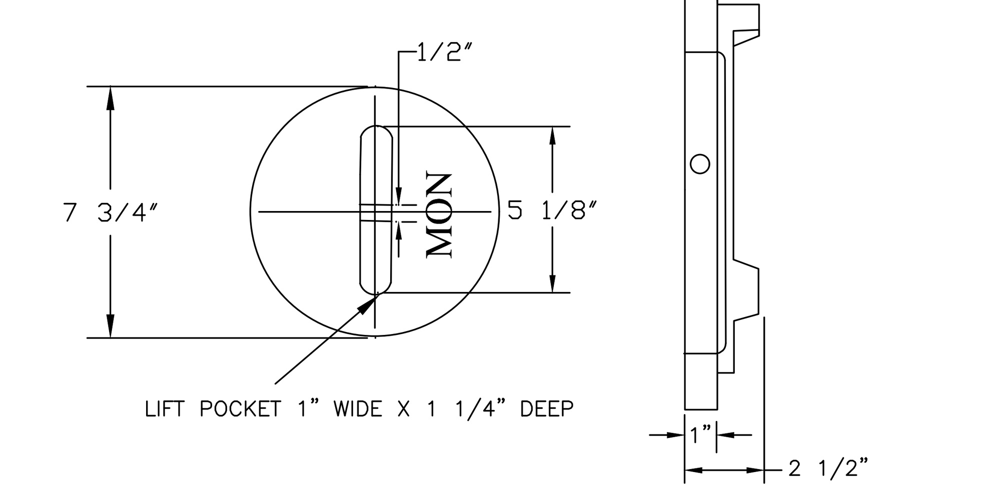

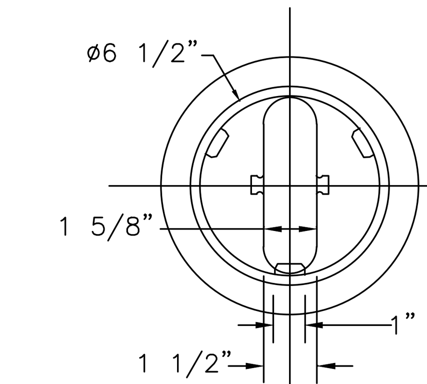

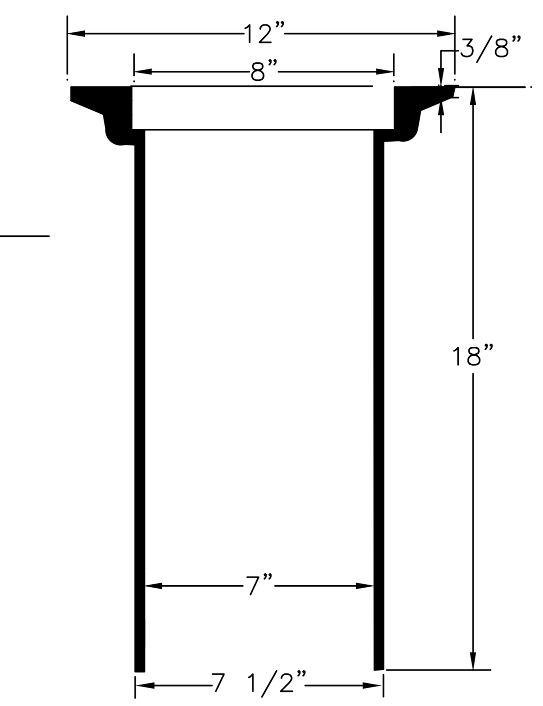

NOTES:

1. OLYMPIC FOUNDRY PART NO. VB910 WITH MON LID OR APPROVED EQUAL.
2. MATERIAL: CAST IRON, ASTM A-46, CL 30
   APPROXIMATE WEIGHT:
   VALVE BOX - 42 LBS.
   COVER - 14 LBS.

DRAWN BY: TU	CITY OF ST.HELENS 265 THE STRAND, ST.HELENS, OR 97051 PH (503)397-6272 FAX (503)397-4016	REVISION: 11/12/2003: CHANGED PART NO.
CHECKED BY:		
DATE:		
SCALE:	TITLE: MONUMENT BOX	DRAWING NO: 267

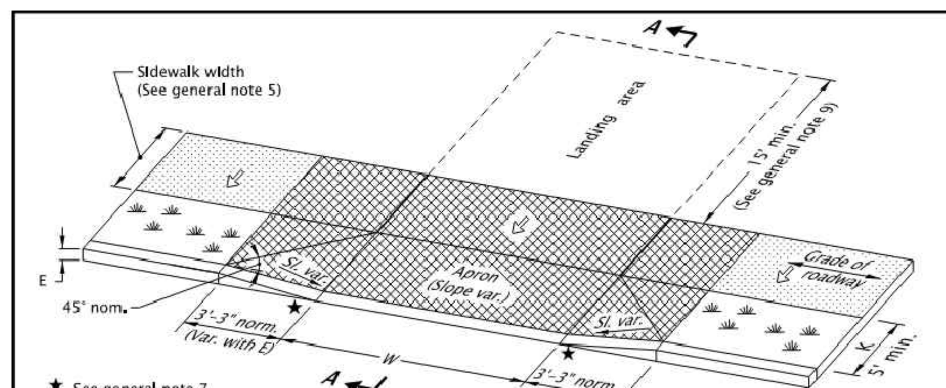

★ See general note 7

OPTION H
TYPICAL SEPARATED SIDEWALK DRIVEWAY
(Use one of the options below if slope requirements shown in Section A-A cannot be met)

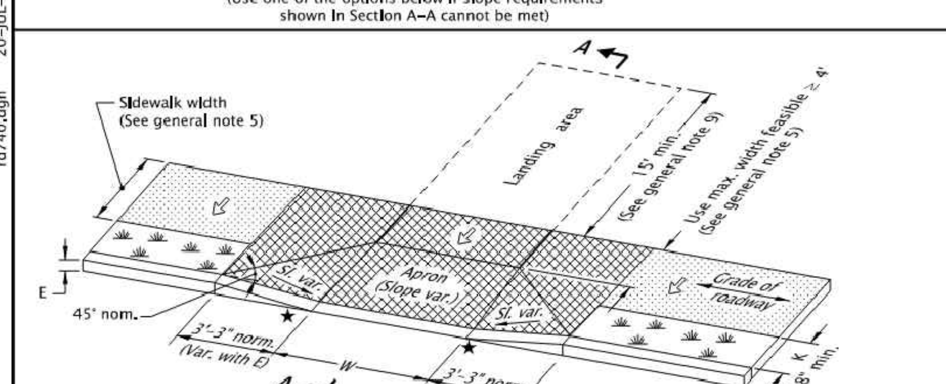

★ See general note 7

OPTION I
DRIVEWAY ENCROACHES INTO SIDEWALK

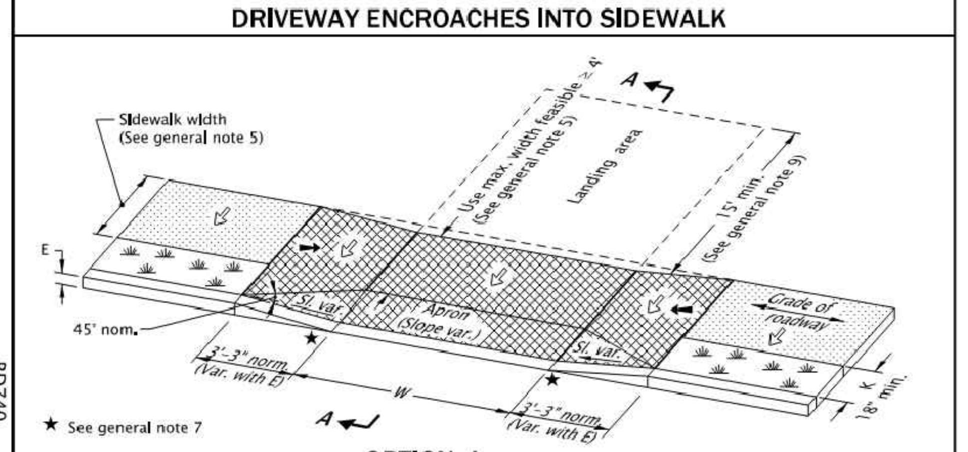

★ See general note 7

OPTION J
LOWERED SIDEWALK

★ See general note 7

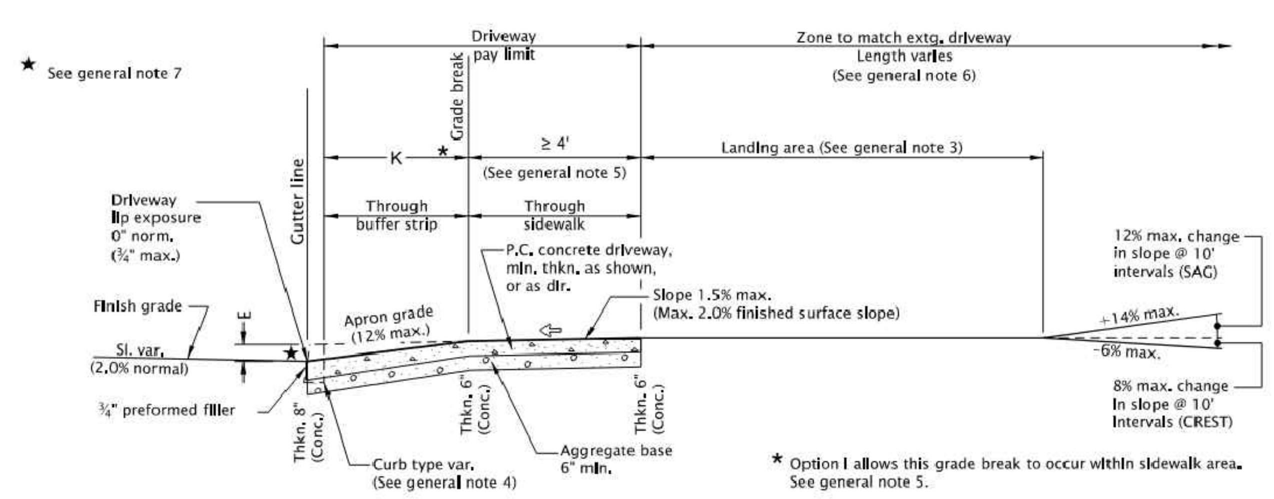

★ Option I allows this grade break to occur within sidewalk area. See general note 5.

SECTION A-A

GENERAL NOTES FOR ALL DETAILS ON THIS SHEET:

1. Details are based on applicable ODOT Standards.
2. Only use details allowed by jurisdiction.
3. The following dimensions are as shown on plans, or as directed: driveway width, driveway slope, sidewalk width, buffer strip width, curb exposure, driveway lip exposure, landing area length and width. See project plans for details not shown.
4. Curb, gutter, and sidewalk types varies, see plans.
   See Std. Dwgs. RD700 & RD701 for curb details.
   See Std. Dwg. RD721 for sidewalk details.
   See Std. Dwg. RD722 for joint details.
5. A greater than or equal 4' unobstructed clear passage with cross slope 1.5% max. (Max. 2.0% finished surface slope) is required behind driveway apron.
6. Where existing driveway is in good condition, and meets slope requirements, construct only as much landing area as required for satisfactory connection with new work.
7. Check the gutter flow depth at driveway locations to assure that the design flood does not overtop the back of sidewalk at driveway. If overtopping occurs place an inlet at upstream side of driveway or perform other approved design mitigation.
8. Construct a full deph expansion joints with 1#2" (In) preformed joint filler at ends of each driveway. Tooled joints are required at all driveway slope break lines.
9. 15' min. of the driveway behind the sidewalk should be surfaced to prevent tracking of gravel onto the sidewalk.
10. Any dimensions except those of general note 5 may be amended by local agencies for their use.

LEGEND:

- Sidewalk
- Driveway pay limit (See project plans for details not shown)
- ⇦ Cross slope 1.5% max. (Max. 2.0% finished surface slope) (Normal sidewalk cross slope)
- ⬅ Running slope 7.5% max. (Max. 8.3% finished surface slope)
- W Width of driveway
- K Buffer strip width
- E Curb exposure

NOTE: This drawing is to be used by local agencies to assist them in the design of driveways on their facilities.

CALC. BOOK NO. N/A — SDR DATE 20-JUL-2020

The selection and use of this Standard Drawing, while designed in accordance with generally accepted engineering principles and practices, is the sole responsibility of the user and should not be used without consulting a Registered Professional Engineer.

NOTE: All material and workmanship shall be in accordance with the current Oregon Standard Specifications

OREGON STANDARD DRAWINGS
SEPARATED SIDEWALK DRIVEWAYS OR ALLEYS (OPTIONS H, I & J) LOCAL JURISDICTIONS
2021

DATE	REVISION DESCRIPTION

Effective Date: December 1, 2021 – May 31, 2022 — RD740

rd740.dgn 20-JUL-2020

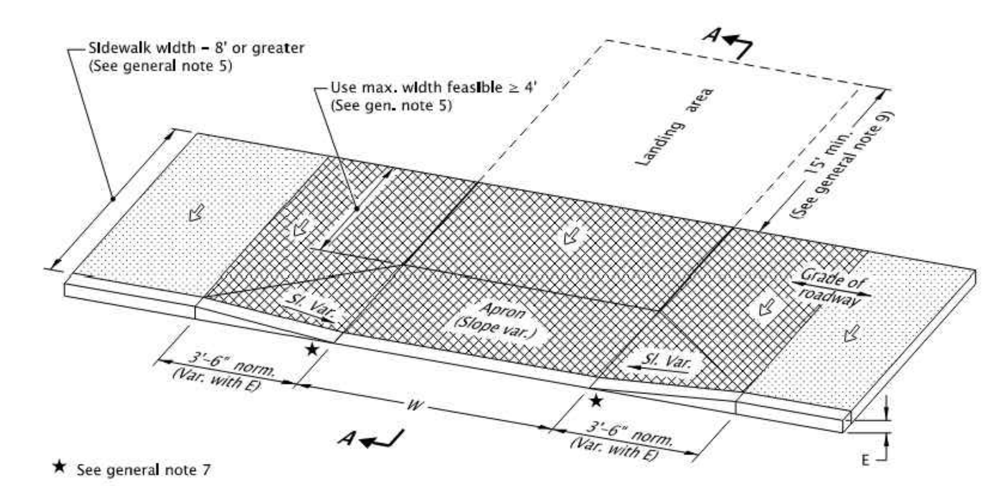

★ See general note 7

OPTION K
DRIVEWAY IN WIDE (8' OR GREATER) SIDEWALK

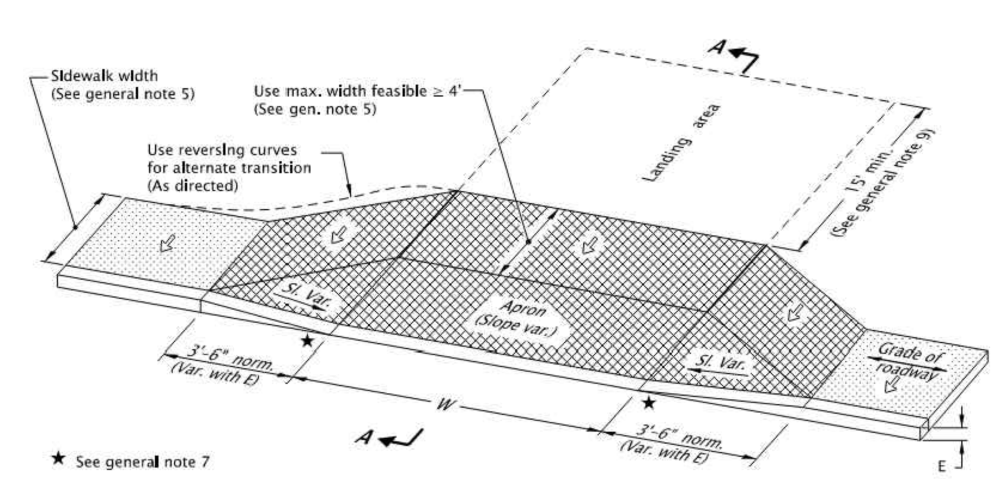

★ See general note 7

OPTION L
SIDEWALK WRAPPED AROUND DRIVEWAY

★ See general note 7

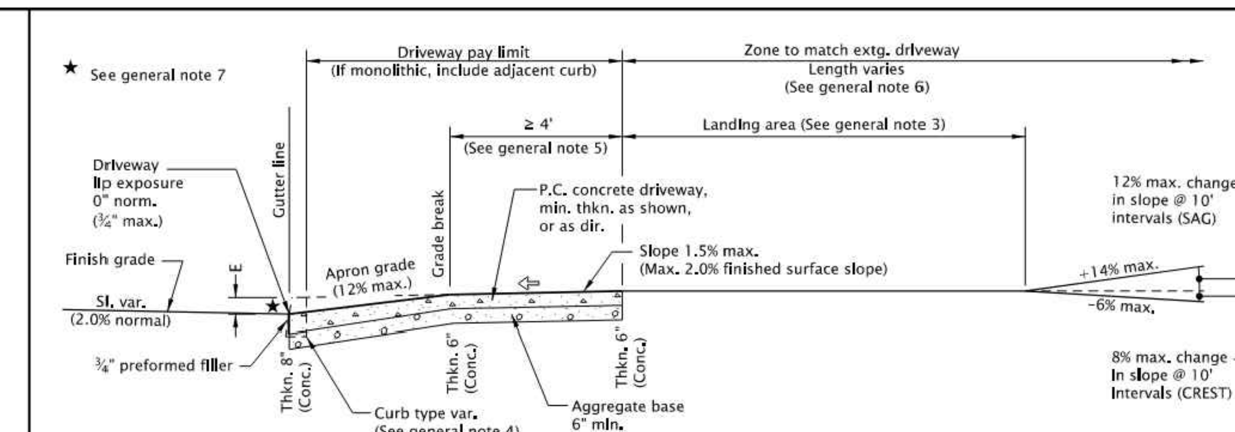

SECTION A-A

GENERAL NOTES FOR ALL DETAILS ON THIS SHEET:

1. Details are based on applicable ODOT Standards.
2. Only use details allowed by jurisdiction.
3. The following dimensions are as shown on plans, or as directed: driveway width, driveway slope, sidewalk width, curb exposure, driveway lip exposure, landing area length and width. See project plans for details not shown.
4. Curb, gutter, and sidewalk types varies, see plans.
   See Std. Dwgs. RD700 & RD701 for curb details.
   See Std. Dwg. RD720 for sidewalk details
   See Std. Dwg. RD722 for joint details.
5. A greater than or equal 4' unobstructed clear passage with cross slope 1.5% max. (Max. 2.0% finished surface slope) is required behind driveway apron.
6. Where existing driveway is in good condition, and meets slope requirements, construct only as much landing area as required for satisfactory connection with new work.
7. Check the gutter flow depth at driveway locations to assure that the design flood does not overtop the back of sidewalk at driveway. If overtopping occurs place an inlet at upstream side of driveway or perform other approved design mitigation.
8. Construct a full deph expansion joints with ½" preformed joint filler at ends of each driveway. Tooled joints are required at all driveway slope break lines.
9. 15' min. of the driveway behind the sidewalk should be surfaced to prevent tracking of gravel onto the sidewalk.
10. Monolithic curb & sidewalk shall retain thickened edge through lowered profile, to accommodate driveway use. See Std. Dwg. RD720 for details.
11. Any dimensions except those of general note 5 may be amended by local agencies for their use.

LEGEND:

- Sidewalk
- Driveway pay limit (If monolithic, include adjacent curb) (See project plans for details not shown)
- ⇦ Cross slope 1.5% max. (Max. 2.0% finished surface slope) (Normal sidewalk cross slope)
- W Width of driveway
- E Curb exposure

NOTE: This drawing is to be used by local agencies to assist them in the design of driveways on their facilities.

CALC. BOOK NO. N/A — SDR DATE 19-JUL-2021

The selection and use of this Standard Drawing, while designed in accordance with generally accepted engineering principles and practices, is the sole responsibility of the user and should not be used without consulting a Registered Professional Engineer.

NOTE: All material and workmanship shall be in accordance with the current Oregon Standard Specifications

OREGON STANDARD DRAWINGS
CURB LINE SIDEWALK DRIVEWAYS OR ALLEYS (OPTIONS K & L) LOCAL JURISDICTIONS
2021

DATE	REVISION DESCRIPTION
07-2021	REVISED NOTES

Effective Date: December 1, 2021 – May 31, 2022 — RD745

rd745.dgn 19-JULY-2021

REGISTERED PROFESSIONAL ENGINEER 72,629 PRELIMINARY OREGON JUNE 11, 2008 KEITH BUISMAN
EXPIRES: 12/31/2023

Otak
Otak, Inc.
808 SW Third Avenue, Ste. 800
Portland, OR 97204
503. 287. 6825
www.otak.com

S. 1ST AND STRAND STREETS ROAD AND UTILITY EXTENSIONS
ST. HELENS, OREGON
DETAILS

STREET DETAILS

TITLE

#	DATE	DESCRIPTION

REVISIONS

NAVD88
DATUM

OTAK CAD — KJB
DRAWN BY — CHECKED BY

90% PLANS
STATUS

JANUARY 10, 2022
DATE

19823
PROJECT NUMBER

2B-1

© 2021 OTAK, INC.

If this drawing is not 22" x 34", it has been reduced/enlarged. Scale accordingly.

Plotted: Jan 10, 2022 - 5:56pm keith.buisman L:\Project\19800\19823\CADD\ACAD\Dwg\C19823C2B.dwg Layout Name: 2B-1

RD740

rd910.dgn 20-JUL-2020

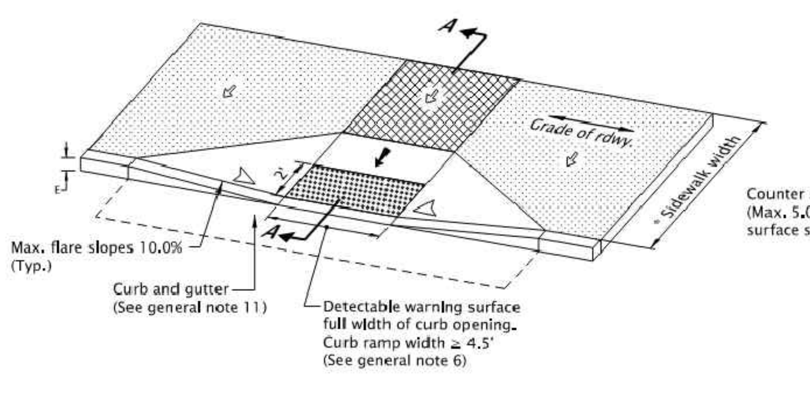

PERPENDICULAR CURB RAMP DETAIL
(Use "Parallel Curb Ramp Detail" or "Combination Curb Ramp Detail" when reqd. turning space cannot be obtained)

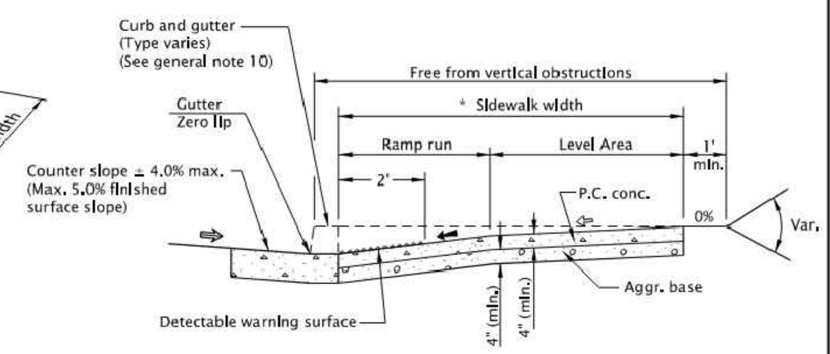

SECTION A-A
* NOTE: Minimum width of 14.25 feet sidewalk for E=7"

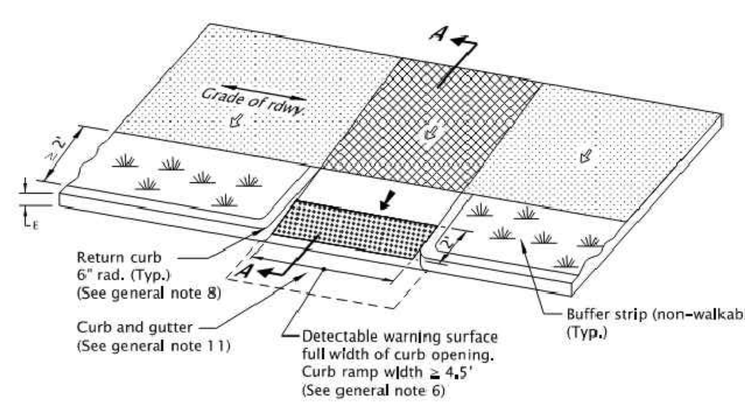

THROUGH BUFFER STRIP

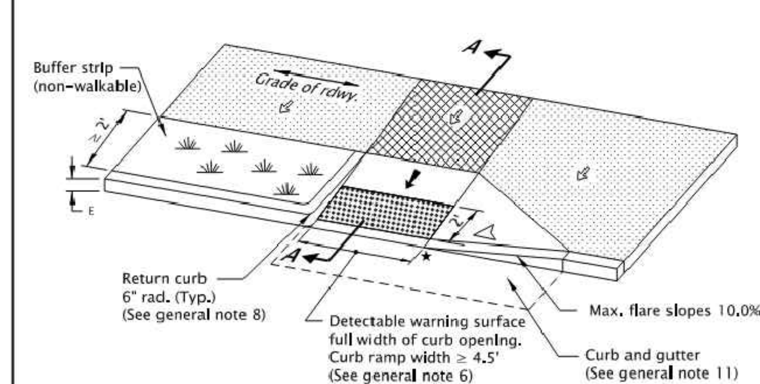

WITH SINGLE FLARE

RD910

GENERAL NOTES FOR ALL DETAILS ON THIS SHEET:

1. Curb ramp details are based on applicable ODOT Standards.
2. See Std. Dwgs. RD700 & RD701 for curbs.
   See Std. Dwgs. RD720 & RD721 for sidewalks.
   See Std. Dwgs. RD902 through RD908 for detectable warning surface installation details.
   See Std. Dwgs. RD912 through RD916 for curb ramp placement options.
3. Site conditions normally require a project specific design. See project plans for details not shown.
4. Tooled dummy joints are required at all curb ramp grade break lines, (see Std. Dwg. RD722).
5. Curb ramp slopes shown are relative to the true level horizon (zero bubble).
6. Place detectable warning surface at the back of curb for a minimum depth of 2' in the direction of pedestrian travel full width of curb ramp opening that is adjacent to traffic.
7. Grade breaks at the top and bottom of curb ramp runs shall be perpendicular to the direction of the ramp run. Grade breaks shall not be permitted on the surface of ramp runs and turning spaces. Surface slopes that meet at grade breaks shall be flush.
8. Return curb may be provided in lieu of flared slope only if protected from traverse travel by landscaping, see Std. Dwg. RD721. Return curb shall not reduce width of approaching sidewalk.
9. Curb ramps for shared use paths intersecting a roadway shall be full width of path, excluding flares. When a curb ramp is used to provide bicycle access from a roadway to a sidewalk, the curb ramp opening will be ≥ 8' wide.
10. Place an inlet at upstream side of curb ramp or perform other approved design mitigation. Check the gutter flow depth at curb ramp locations to assure that the design flood does not overtop the back of sidewalk.
11. On or along state highways, curb and gutter is required at curb ramps.

LEGEND:

- Sidewalk
- Detectable warning surface
- Level area (Turning space/landing)
  Unobstructed 4.5' x 4.5'
  With obstruction 4.5' x 5.5' (Longer dimension in direction of pedestrian street crossing).
  For the purposes of this application, a max. 2.0% finished surface slope (for drainage) measured perpendicular in two directions is considered level.
- Cross slope 1.5% max. (Max. 2.0% finished surface slope) (Normal sidewalk cross slope)
- Running slope 7.5% max. (Max. 8.3% finished surface slope)
- Counter slope 4.0% max. ascending or descending, (Max. 5.0% finished surface slope) Slope as required for drainage
- Flare slope (Max. 10% finished surface slope)

CALC. BOOK NO. N/A	SDR DATE 20-JULY-2020
The selection and use of this Standard Drawing, while designed in accordance with generally accepted engineering principles and practices, is the sole responsibility of the user and should not be used without consulting a Registered Professional Engineer.	NOTE: All material and workmanship shall be in accordance with the current Oregon Standard Specifications **OREGON STANDARD DRAWINGS** **PERPENDICULAR CURB RAMP** 2021

DATE	REVISION DESCRIPTION
07-2020	DRAWING CREATED

Effective Date: December 1, 2021 – May 31, 2022 RD910

rd916.dgn 20-JUL-2020

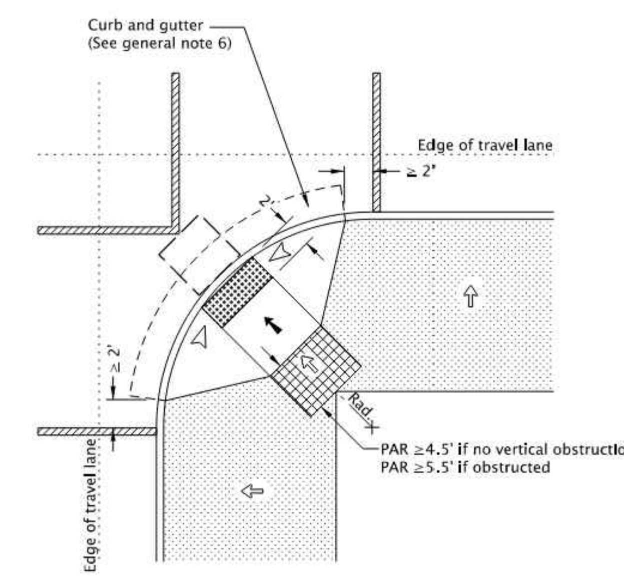

DIAGONAL CURB RAMP FOR WIDE SIDEWALKS OPTION "PR-9"
(Use only when site constraints prohibit installing two curb ramps)

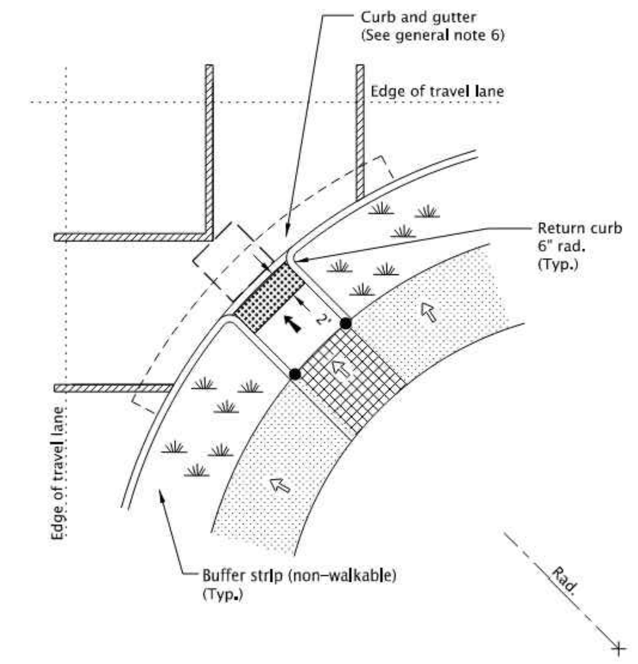

DIAGONAL CURB RAMP WITH LANDSCAPED BUFFER STRIP OPTION "PR-10"
(Use only when site constraints prohibit installing two curb ramps)

RD916

GENERAL NOTES FOR ALL DETAILS ON THIS SHEET:

1. Curb ramp details are based on applicable ODOT Standards.
2. See project plans for details not shown.
   See Std. Dwgs. RD700 & RD701 for curbs.
   See Std. Dwgs. RD720 & RD721 for sidewalks.
   See Std. Dwg. RD910 for perpendicular curb ramp details.
   See Std. Dwgs. RD902 through RD908 for detectable warning surface installation details.
3. Tooled dummy joints are required at all curb ramp slope break lines, (see Std. Dwg. RD722).
4. Curb ramp slopes shown are relative to the true level horizon (zero bubble).
5. Only use curb ramp options allowed by jurisdiction. Single ramps required design exceptions on or along state highways.
6. On or along state highways, curb and gutter is required at curb ramps.

LEGEND:

- Marked or intended crossing location
- Sidewalk
- Detectable warning surface
- Level area (Turning space/landing)
  Unobstructed 4.5' x 4.5'
  With obstruction 4.5' x 5.5' (Longer dimension in direction of pedestrian street crossing).
  For the purposes of this application, a max. 2.0% finished surface slope (for drainage) measured perpendicular in two directions is considered level.
- Cross slope 1.5% max. (Max. 2.0% finished surface slope) (Normal sidewalk cross slope)
- Running slope 7.5% max. (Max. 8.3% finished surface slope)
- Flare slope (Max. 10% finished surface slope)
- 4'x4' clear space
- PAR Pedestrian Access Route
- ● Zero curb exposure

CALC. BOOK NO. N/A	SDR DATE 20-JULY-2020
The selection and use of this Standard Drawing, while designed in accordance with generally accepted engineering principles and practices, is the sole responsibility of the user and should not be used without consulting a Registered Professional Engineer.	NOTE: All material and workmanship shall be in accordance with the current Oregon Standard Specifications **OREGON STANDARD DRAWINGS** **PERPENDICULAR CURB RAMP SINGLE RAMP** 2021

DATE	REVISION DESCRIPTION
07-2020	DRAWING CREATED

Effective Date: December 1, 2021 – May 31, 2022 RD916

rd750.dgn 20-JUL-2020

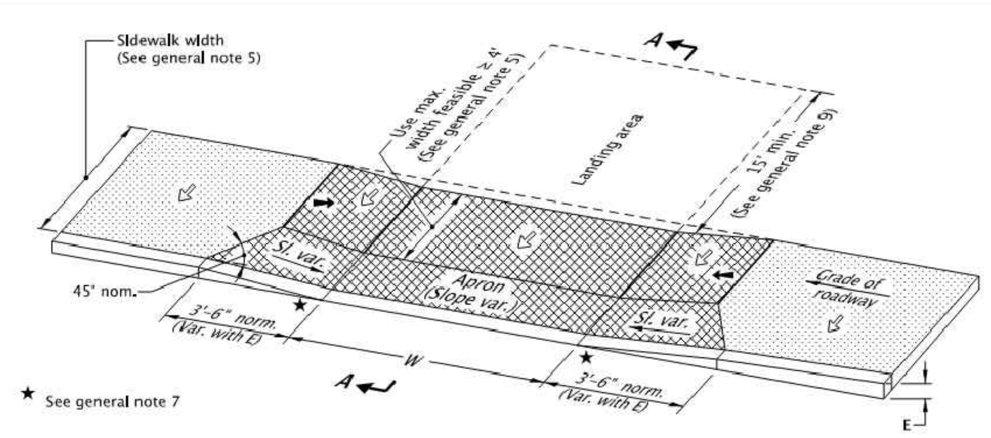

OPTION M
PARTIALLY LOWERED SIDEWALK

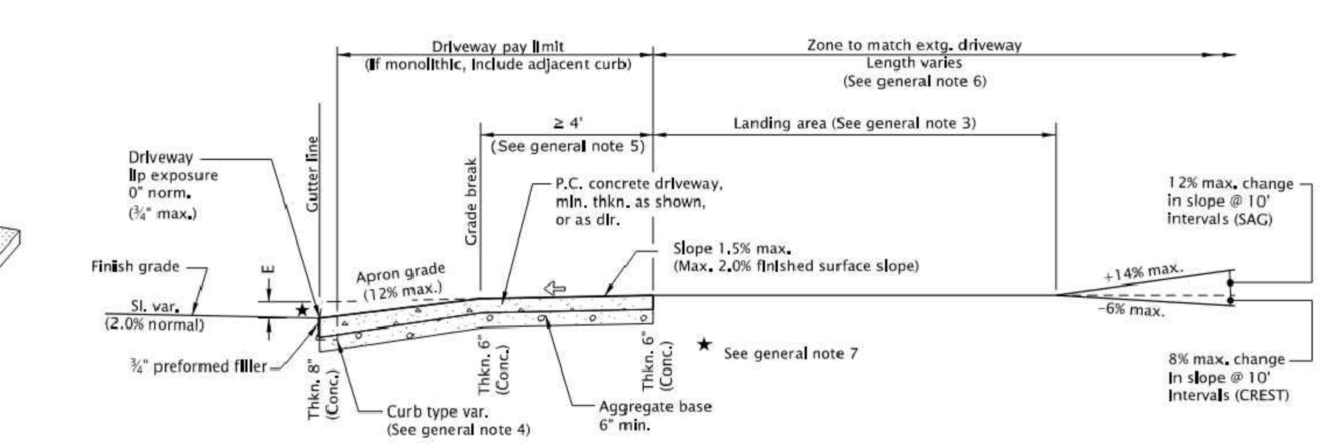

SECTION A-A

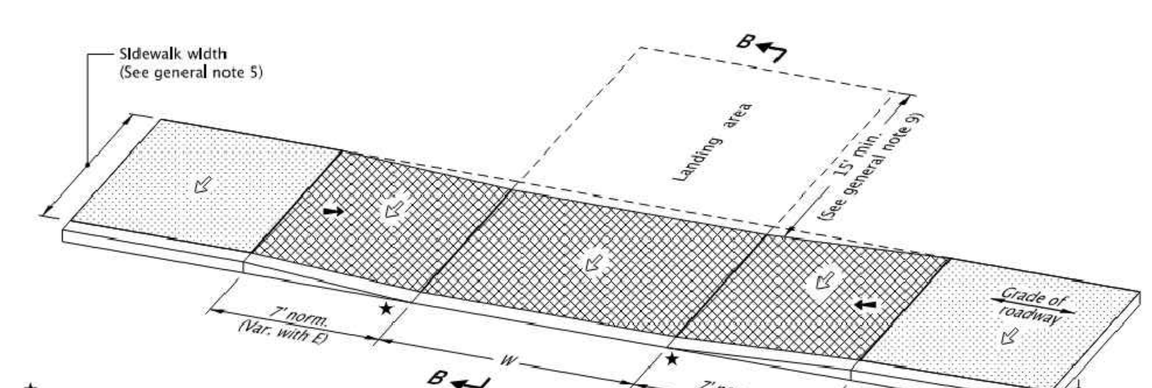

OPTION N
FULLY LOWERED SIDEWALK

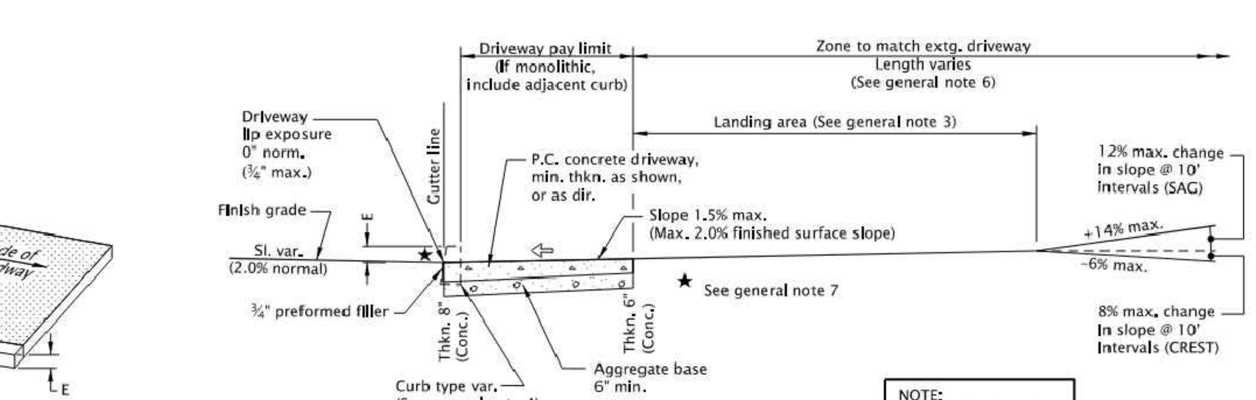

SECTION B-B

NOTE:
This drawing is to be used by local agencies to assist them in the design of driveways on their facilities.

RD750

GENERAL NOTES FOR ALL DETAILS ON THIS SHEET:

1. Details are based on applicable ODOT Standards.
2. Only use details allowed by jurisdiction.
3. The following dimensions are as shown on plans, or as directed: driveway width, driveway slope, sidewalk width, curb exposure, driveway lip exposure, landing area length and width. See project plans for details not shown.
4. Curb, gutter, and sidewalk types varies, see plans.
   See Std. Dwgs. RD700 & RD701 for curb details.
   See Std. Dwg. RD720 for sidewalk details
   See Std. Dwg. RD722 for joint details.
5. A greater than or equal 4' unobstructed clear passage with cross slope 1.5% max. (Max. 2.0% finished surface slope) is required behind driveway apron.
6. Where existing driveway is in good condition, and meets slope requirements, construct only as much landing area as required for satisfactory connection with new work.
7. Check the gutter flow depth at driveway locations to assure that the design flood does not overtop the back of sidewalk at driveway.
   If overtopping occurs place an inlet at upstream side of driveway or perform other approved design mitigation.
8. Construct a full deph expansion joints with 1#2" (in) preformed joint filler at ends of each driveway.
   Tooled joints are required at all driveway slope break lines.
9. 15' min. of the driveway behind the sidewalk should be surfaced to prevent tracking of gravel onto the sidewalk.
10. Monolithic curb & sidewalk shall retain thickened edge through lowered profile, to accommodate driveway use. See Std. Dwg. RD720 for details.
11. Any dimensions except those of general note 5 may be amended by local agencies for their use.

LEGEND:

- Sidewalk
- Driveway pay limit (If monolithic, include adjacent curb) (See project plans for details not shown)
- Cross slope 1.5% max. (Max. 2.0% finished surface slope) (Normal sidewalk cross slope)
- Running slope 7.5% max. (Max. 8.3% finished surface slope)
- W Width of driveway
- E Curb exposure

CALC. BOOK NO. N/A	SDR DATE 20-JUL-2020
The selection and use of this Standard Drawing, while designed in accordance with generally accepted engineering principles and practices, is the sole responsibility of the user and should not be used without consulting a Registered Professional Engineer.	NOTE: All material and workmanship shall be in accordance with the current Oregon Standard Specifications **OREGON STANDARD DRAWINGS** **CURB LINE SIDEWALK DRIVEWAYS OR ALLEYS (OPTIONS M & N) LOCAL JURISDICTIONS** 2021

DATE	REVISION DESCRIPTION

Effective Date: December 1, 2021 – May 31, 2022 RD750

det1604.dgn 20-APR-2016

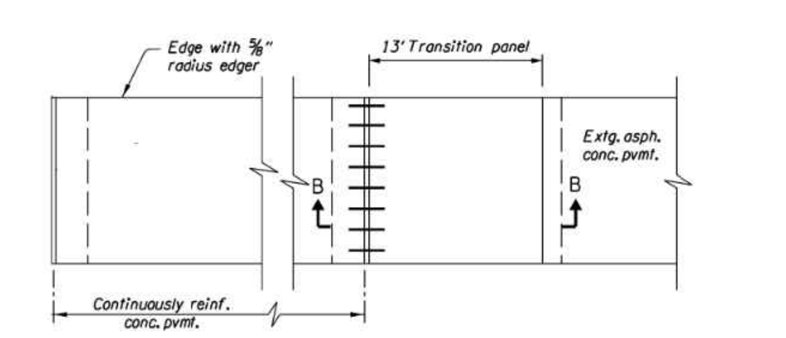

PLAN

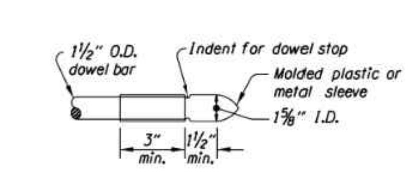

DETAIL "B"

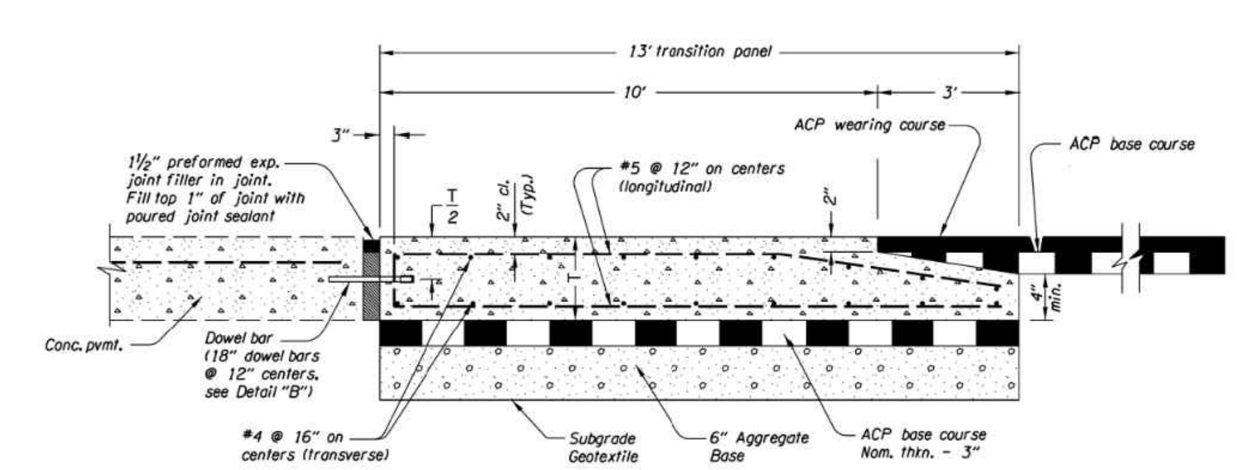

SECTION B-B

TRANSITION PANEL

DET1604

GENERAL NOTES FOR ALL DETAILS:
1. Use a transition panel at the transition to an asphaltic conc. pvmt.
2. Lap all bars 24" at splices.
3. Use reinforcing steel conforming to ASTM A706 or AASHTO M31 (ASTM A615) grade 60. Use full length bars as shown, and place them a minimum 2" clear of the nearest face of conc. unless shown or noted otherwise.
4. Use HPC4000-1½ paving concrete.
5. For ACP type and other details not shown, see other plan sheets.

The selection and use of this detail, while designed in accordance with generally accepted engineering principles and practices, is the sole responsibility of the user and should not be used without consulting a Registered Professional Engineer.

OREGON DEPARTMENT OF TRANSPORTATION
TECHNICAL SERVICES
DETAILS

CONTINUOUSLY REINFORCED CONCRETE PAVEMENT TRANSITION PANEL AND DETAILS

DETAIL NO. DET1604

City of St. Helens
FOUNDED 1850

REGISTERED PROFESSIONAL ENGINEER
72,629
PRELIMINARY
OREGON
JUNE 11, 2008
KEITH BUISMAN
EXPIRES: 12/31/2023

Otak

Otak, Inc.
808 SW Third Avenue, Ste. 800
Portland, OR 97204
503. 287. 6825
www.otak.com

S. 1ST AND STRAND STREETS ROAD AND UTILITY EXTENSIONS
ST. HELENS, OREGON
DETAILS

STREET DETAILS

TITLE

#	DATE	DESCRIPTION

REVISIONS

NAVD88
DATUM

OTAK CAD KJB
DRAWN BY CHECKED BY

90% PLANS
STATUS

JANUARY 10, 2022
DATE

19823
PROJECT NUMBER

2B-2

© 2021 OTAK, INC.

If this drawing is not 22" x 34", it has been reduced/enlarged. Scale accordingly.

Plotted: Jan 10, 2022 - 5:56pm keith.buisman L:\Project\19800\19823\CADD\ACAD\Dwg\C19823C2B.dwg Layout Name: 2B-2

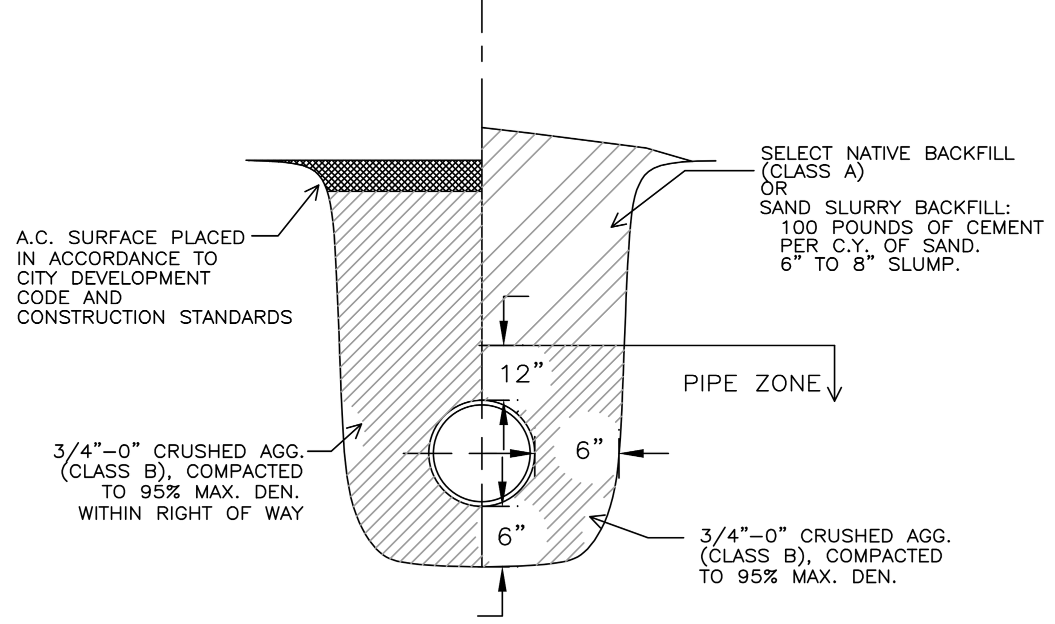

NOTES:

1. MINIMUM TRENCH WIDTH IS 24–INCHES (SEE APWA SEC 301.3)

DRAWN BY:	CITY OF ST.HELENS 265 THE STRAND, ST.HELENS, OR 97051 PH (503)397–6272 FAX (503)397–4016	REVISION:
CHECKED BY:		
DATE:	TITLE: TYPICAL TRENCH DETAIL	DRAWING NO: 300
SCALE:		

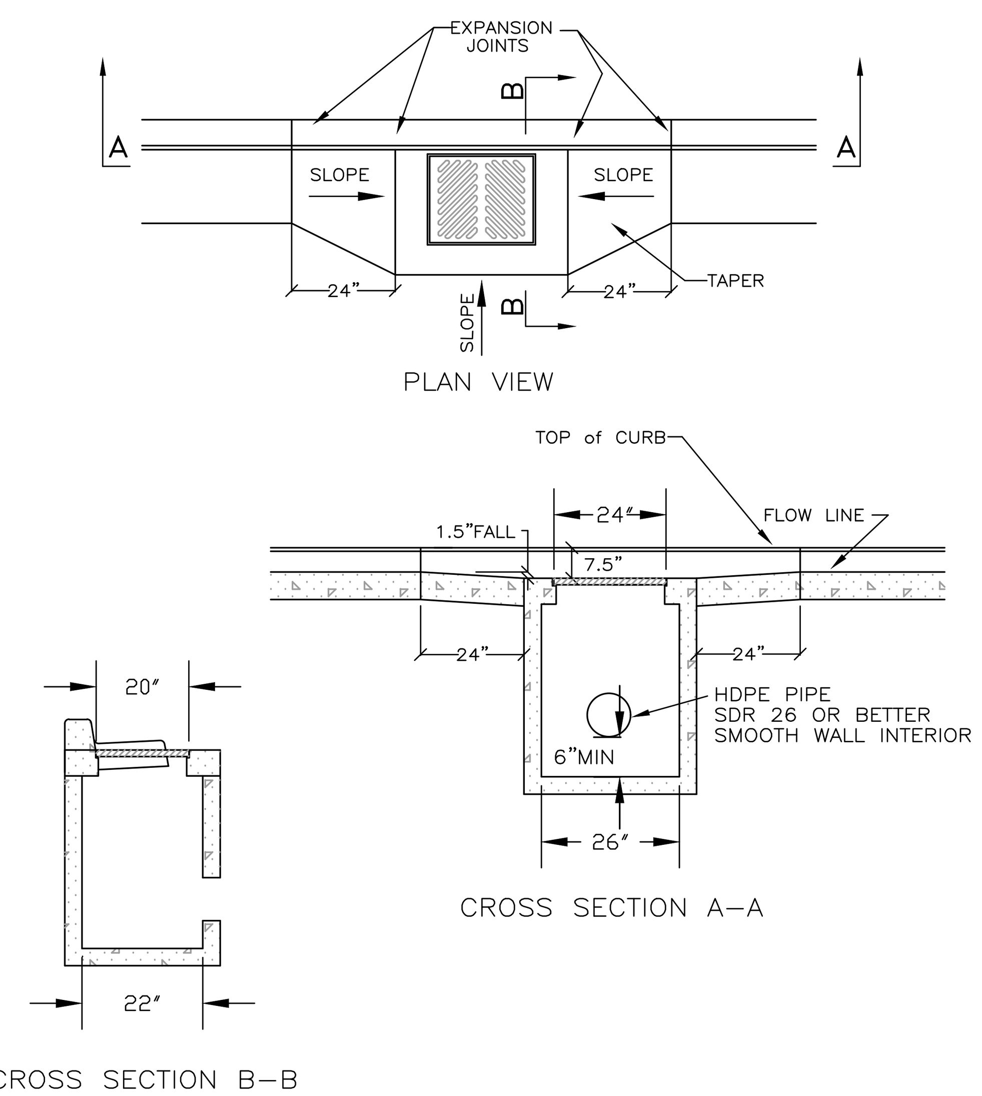

NOTE:
USES WSDOT STD STYLE "C–2" GRATE

DRAWN BY: T. KOLLN	CITY OF ST.HELENS 265 THE STRAND, ST.HELENS, OR 97051 PH (503)397–6272 FAX (503)397–4016	REVISION: NC
CHECKED BY: .		
DATE: .	TITLE: TYPICAL 20"X24" CATCH BASIN	DRAWING NO: 315
SCALE: .		

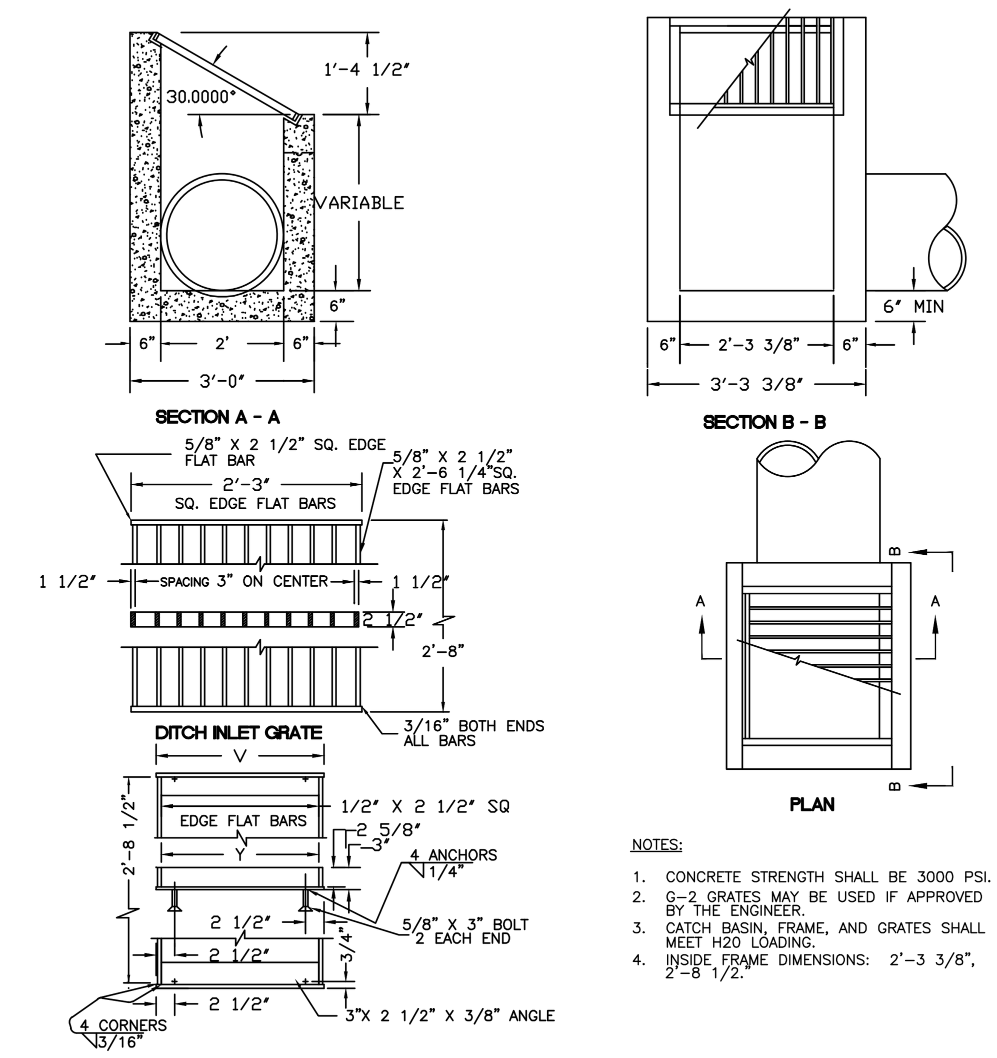

NOTES:

1. CONCRETE STRENGTH SHALL BE 3000 PSI.
2. G–2 GRATES MAY BE USED IF APPROVED BY THE ENGINEER.
3. CATCH BASIN, FRAME, AND GRATES SHALL MEET H20 LOADING.
4. INSIDE FRAME DIMENSIONS: 2'–3 3/8", 2'–8 1/2."

NOTE:
3/8" CROSS BARS SHALL BE FLUSH WITH THE GRATE SURFACE AND MAY BE FILLET WELDED, RESISTANCE WELDED OR ELECTROFORGED TO BEARING BARS.

DITCH INLET FRAME

INLET TYPE	V	Y	Y_1	NO. OF BARS	TYPE
D	2'–4 3/4"	2'–3 3/8"	2'–3"	9	1

DRAWN BY: T. KOLLN	CITY OF ST.HELENS 265 THE STRAND, ST.HELENS, OR 97051 PH (503)397–6272 FAX (503)397–4016	REVISION: NC
CHECKED BY:		
DATE:	TITLE: DITCH INLET	DRAWING NO: 325
SCALE:		

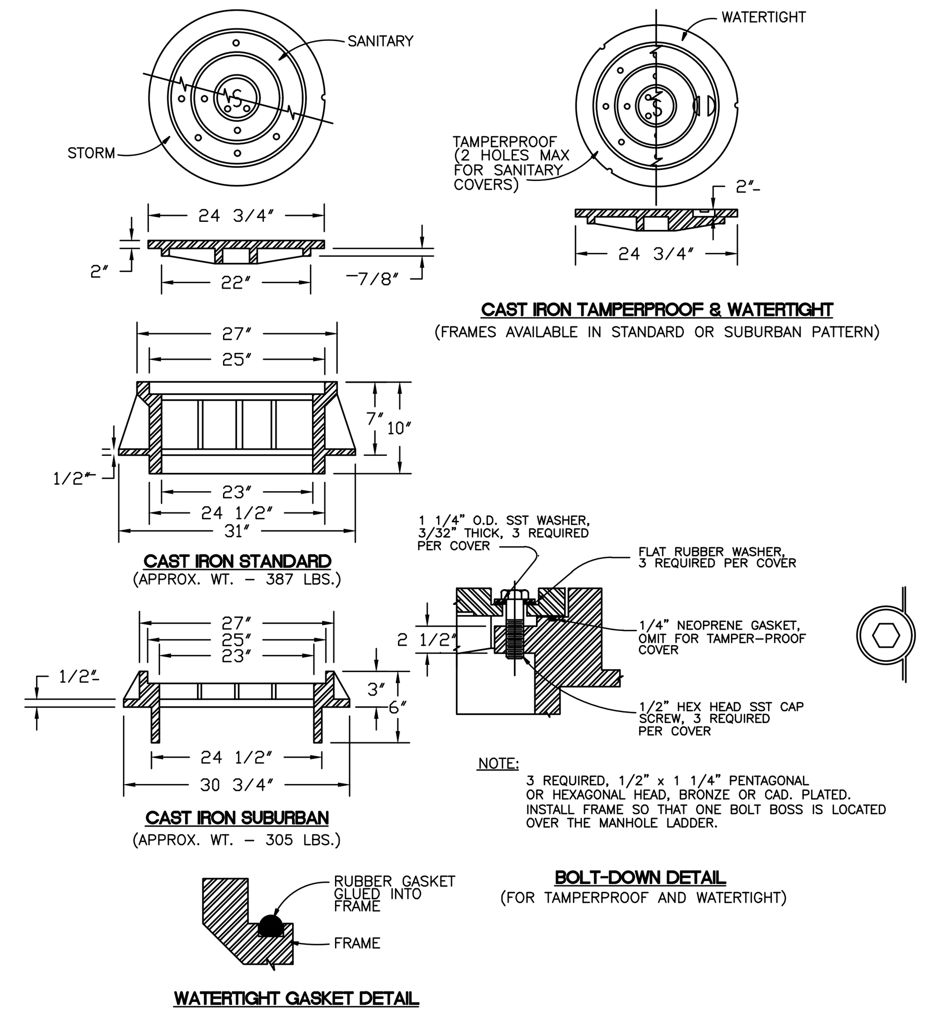

NOTES:

1. TAMPERPROOF COVERS REQ'D ON SANITARY OR STORM DRAIN MANHOLE WHERE LOCATED IN PEDESTRIAN WAYS OR EASMENT AREAS. TAMPERPROOF COVERS FOR SANITARY MANHOLES SHALL HAVE 2 HOLES MAXIMUM.
2. WATERTIGHT COVERS REQUIRED IF LOCATED WHERE COVER MAY BE SUBMERGED.
3. FRAMES AND COVERS SHALL BE STAMPED WITH MANUFACTURER'S INITIALS, HEAT NUMBER AND POINT OF ORIGIN.

DRAWN BY: T. KOLLN	CITY OF ST.HELENS 265 THE STRAND, ST.HELENS, OR 97051 PH (503)397–6272 FAX (503)397–4016	REVISION: NC
CHECKED BY: .		
DATE: .	TITLE: MANHOLE COVER & FRAME DETAILS	DRAWING NO: 346
SCALE: .		

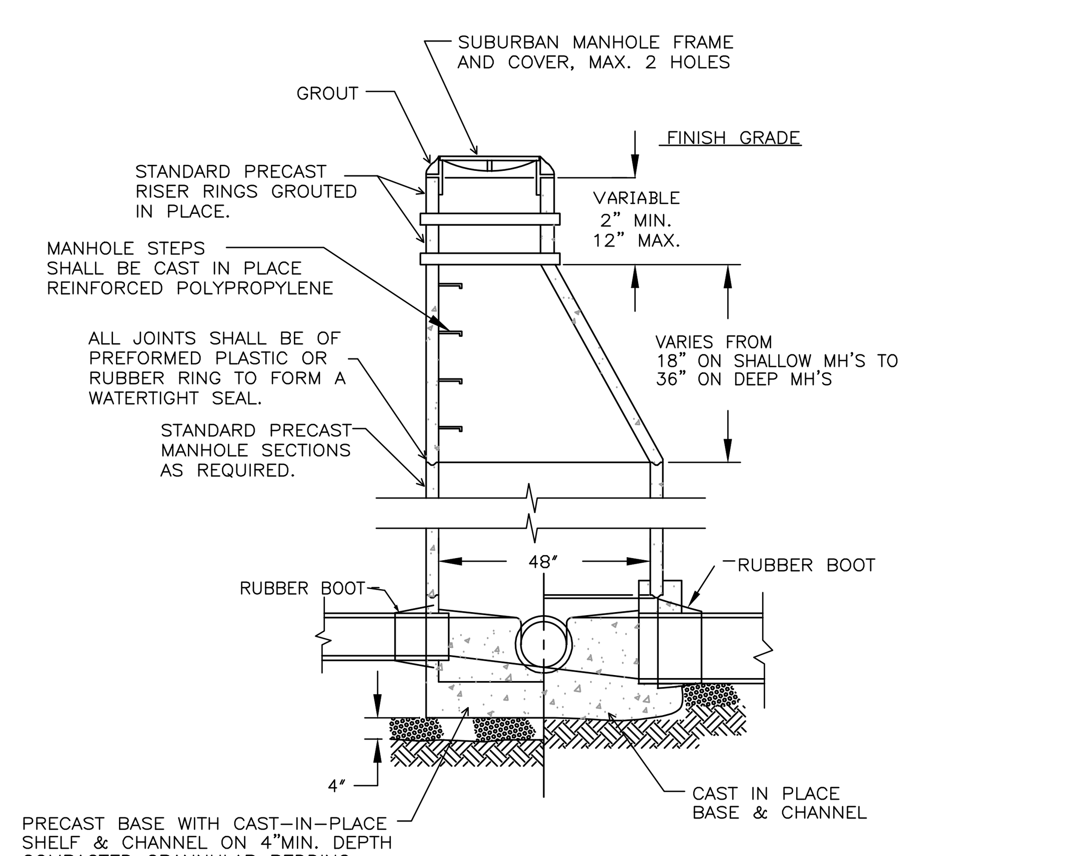

NOTES:

1) STANDARD PRECAST MANHOLE SECTIONS – ASTM C478
USE 48" MINIMUM FOR PIPE SIZES TO 30" MAXIMUM
USE 60" MINIMUM FOR PIPE SIZES TO 42" MAXIMUM
USE 72", 84", OR 102" WHEN SPECIFIED.
2) USE ECCENTRIC PRECAST CONE FOR ALL MANHOLES OVER FOUR FEET DEEP.
3) PIPE CONNECTIONS SHALL CONFORM WITH DIVISION 3 OF THE APWA STANDARDS
4) FRAME AND RISER RINGS SHALL BE SEALED WITH PREFORMED PLASTIC OR RUBBER TO FORM A WATERTIGHT SEAL. GROUT MAY BE USED FOR STORM SYSTEMS.

DRAWN BY: T. KOLLN	CITY OF ST.HELENS 265 THE STRAND, ST.HELENS, OR 97051 PH (503)397–6272 FAX (503)397–4016	REVISION: NC
CHECKED BY: .		
DATE: .	TITLE: TYPICAL MANHOLE DETAIL	DRAWING NO: 350
SCALE: .		

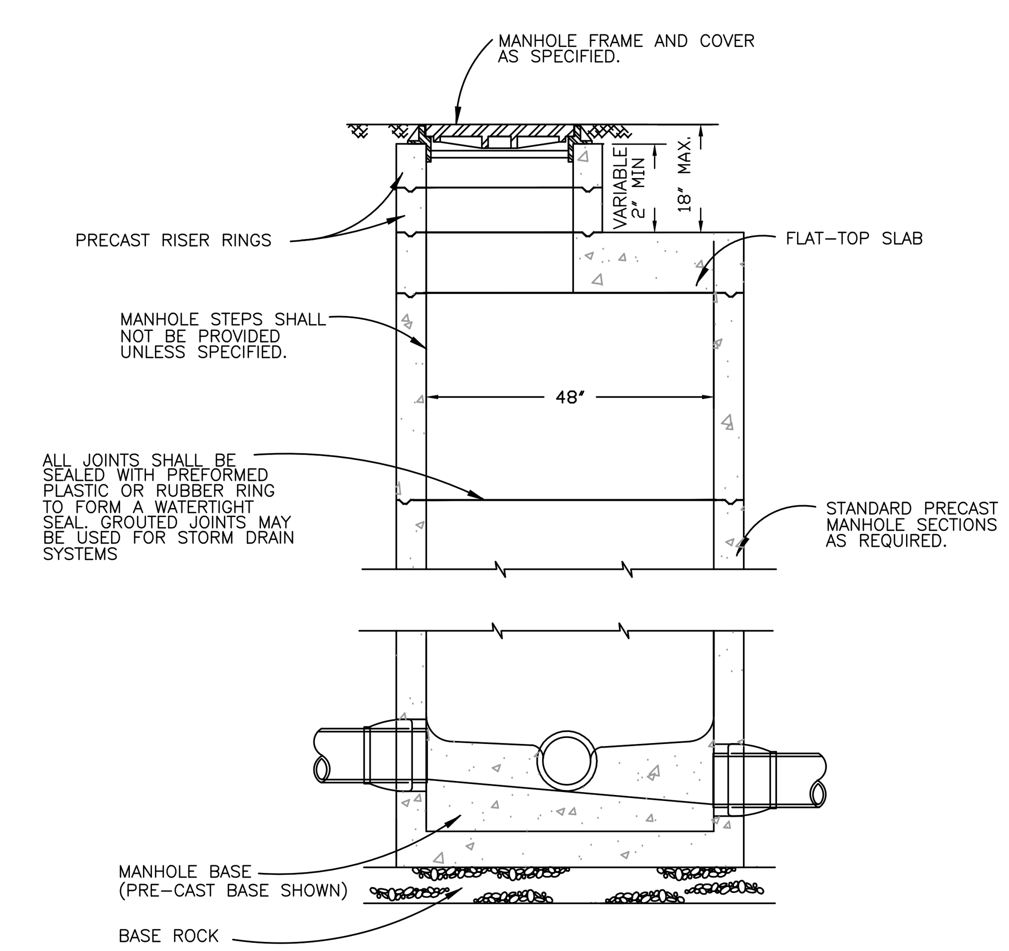

NOTE:S

1. SEE MANHOLE BASE SECTION DRAWING FOR BASE DETAILS
2. MANHOLE MAY BE 42" DIAMETER IF DIRECTED BY ENGINEER.
3. REFER TO STANDARD MANHOLE DETAIL.
4. FRAME AND RISER RINGS SHALL BE SEALED WITH PREFORMED PLASTIC OR RUBBER TO FORM A WATERTIGHT SEAL. GROUT MAY BE USED FOR STORM SYSTEMS.

DRAWN BY: T. KOLLN	CITY OF ST.HELENS 265 THE STRAND, ST.HELENS, OR 97051 PH (503)397–6272 FAX (503)397–4016	REVISION: NC
CHECKED BY: .		
DATE: .	TITLE: FLAT–TOP MANHOLE	DRAWING NO: 351
SCALE: .		

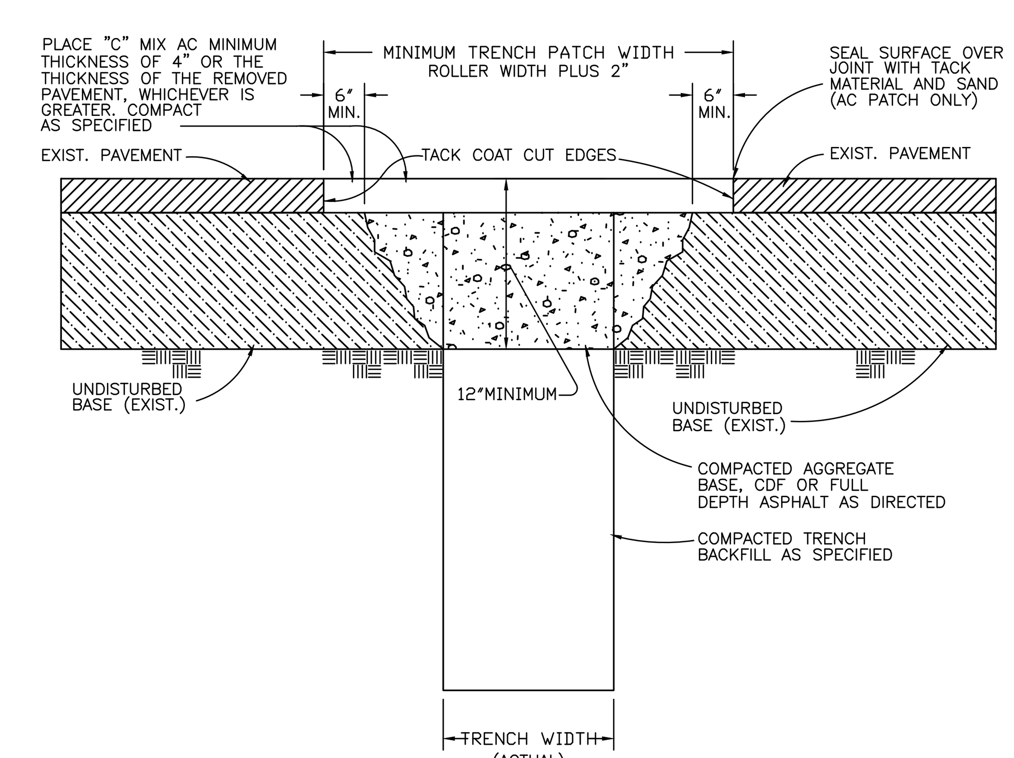

NOTES:

1. ALL EXISTING AC OR PCC PAVEMENT SHALL BE SAWCUT PRIOR TO REPAVING.
2. CONCRETE PAVEMENT SHALL BE REPLACED WITH CONCRETE TO A MINIMUM THICKNESS OF 6" OR TO THE THICKNESS OF REMOVED PAVEMENT, WHICHEVER IS GREATER.
3. IF EXISTING BASE MATERIAL IS CTB OR ATB, THEN REPLACEMENT BASE MATERIAL SHALL MATCH EXISTING.
4. CONCRETE STRENGTH SHALL BE 3300 PSI AT 28 DAYS.

DRAWN BY: T. KOLLN	CITY OF ST.HELENS 265 THE STRAND, ST.HELENS, OR 97051 PH (503)397–6272 FAX (503)397–4016	REVISION: NC
CHECKED BY: .		
DATE: .	TITLE: STREET UTILITY PATCH	DRAWING NO: 256
SCALE: .		

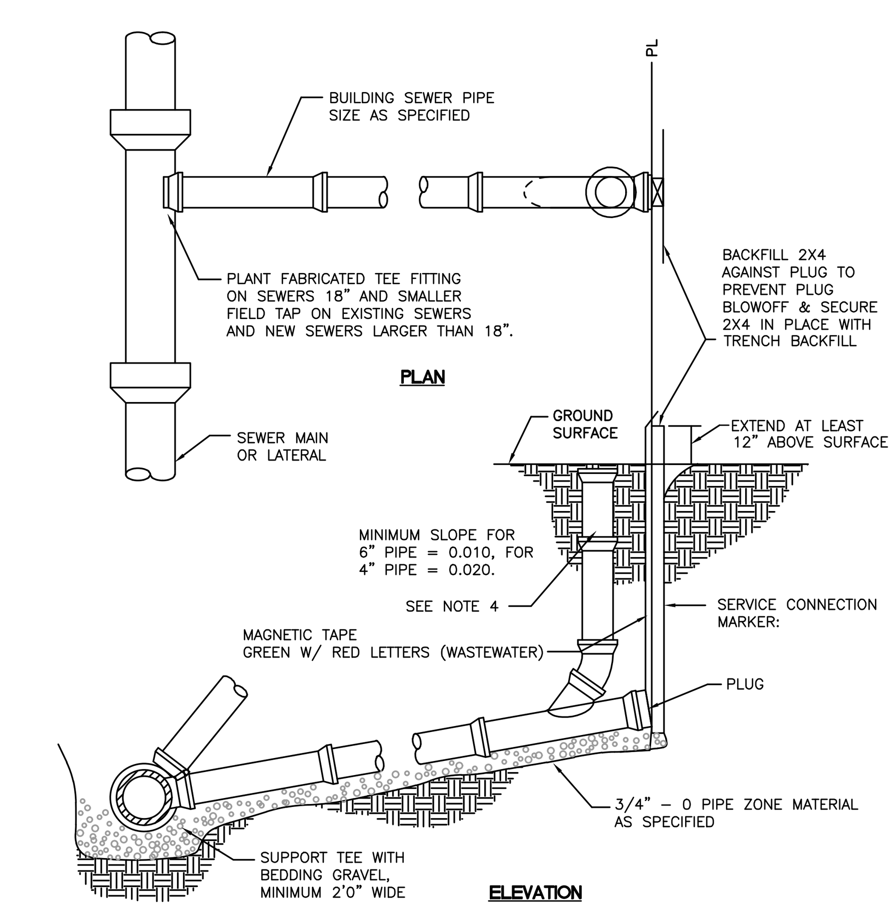

NOTES:

1. PIPE AND FITTINGS SHALL BE COMPATIBLE. ONLY MANUFACTURED FITTINGS SHALL BE USED.
2. MINIMUM DEPTH AT RIGHT OF WAY OR EASEMENT LINE SHALL BE 4 FEET.
3. MARKER POSTS AND BLOCKING SHALL BE TREATED WOOD. POST SHALL BE 2" x 4" FIR. POST TO EXTEND 12" MINIMUM ABOVE FINISH GRADE AND EXPOSED AREA SHALL BE PAINTED WHITE.
4. WHEN REQUIRED, A CLEANOUT SHALL BE INSTALLED.
5. LAY BUILDING SEWER AT MAX. 45° FROM HORIZONTAL TO ACHIEVE REQUIRED DEPTH AT PROPERTLY LINE WHEN MINIMUM SLOPE RESULTS IN EXCESSIVE DEPTH.

DRAWN BY: T. KOLLN	CITY OF ST.HELENS 265 THE STRAND, ST.HELENS, OR 97051 PH (503)397–6272 FAX (503)397–4016	REVISION: NC
CHECKED BY: .		
DATE: .	TITLE: SHALLOW TRENCH SERVICE CONNECTION, BLOCKING, & MARKING	DRAWING NO: 335
SCALE: .		

City of St. Helens
FOUNDED 1850

REGISTERED PROFESSIONAL ENGINEER
72,629
PRELIMINARY
OREGON
JUNE 11, 2008
KEITH BUISMAN
EXPIRES: 12/31/2023

Otak
Otak, Inc.
808 SW Third Avenue, Ste. 800
Portland, OR 97204
503. 287. 6825
www.otak.com

S. 1ST AND STRAND STREETS ROAD AND UTILITY EXTENSIONS

ST. HELENS, OREGON
DETAILS

STORM AND SANITARY SEWER DETAILS

TITLE

#	DATE	DESCRIPTION

REVISIONS

NAVD88
DATUM

OTAK CAD — KJB
DRAWN BY — CHECKED BY

90% PLANS
STATUS

JANUARY 10, 2022
DATE

19823
PROJECT NUMBER

2B-3

© 2021 OTAK, INC.

If this drawing is not 22" x 34", it has been reduced/enlarged. Scale accordingly.

Plotted: Jan 10, 2022 - 5:56pm keith.buisman L:\Project\19800\19823\CADD\ACAD\Dwg\C19823C2B.dwg Layout Name: 2B-3

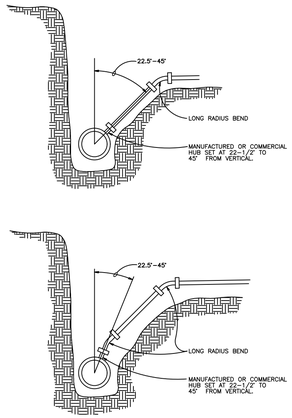

NOTES:

1. PIPE AND FITTINGS SHALL BE COMPATIBLE. ONLY MANUFACTURED FITTINGS SHALL BE USED.
2. MINIMUM DEPTH AT RIGHT OF WAY OR EASEMENT LINE SHALL BE 4 FEET.
3. PLUGGING, BLOCKING, AND MARKING OF UNCONNECTED SERVICES SHALL CONFORM TO SHALLOW TRENCH SERVICE CONNECTION DRAWING.
4. VERTICAL TRENCH WALLS ARE REQUIRED. IF IT IS NOT POSSIBLE TO MAINTAIN VERTICAL TRENCH WALLS, USE ALTERNATE CONNECTION METHOD TO MAINTAIN 6" MAXIMUM DISTANCE BETWEEN RISER PIPE AND TRENCH WALLS. REPLACE ALL EXCAVATED OR DISTURBED MATERIAL WITH FULL DEPTH GRANULAR BACKFILL COMPACTED TO 95% RELATIVE DENSITY.
5. WHERE DEEP CONNECTION IS AT AN ANGLE LESS THAN 45° FROM VERTICAL, DUCTILE IRON PIPE AND FITTINGS SHOULD BE USED.

DRAWN BY: T. KOLLN	CITY OF ST.HELENS 265 THE STRAND, ST.HELENS, OR 97051 PH (503)397-6272 FAX (503)397-4016	REVISION: NC
CHECKED BY: .	TITLE: TYPICAL DEEP TRENCH SERVICE CONNECT DETAIL	DRAWING NO: 336
DATE: .		
SCALE: .		

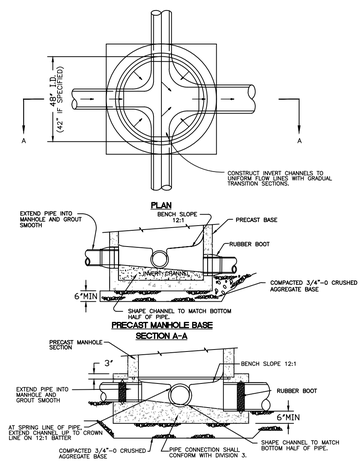

NOTES:

1. CONCRETE SHALL BE 3300 PSI AT 28 DAYS.
2. CHANNELS SHALL BE CONSTRUCTED TO PROVIDE SMOOTH SLOPES AND RADII TO OUTLET PIPE.
3. BASES MAY BE PRECAST OR POURED IN PLACE.
4. THIS MANHOLE BASE SECTION SHALL BE USED FOR PIPE SIZES UP TO 24".
5. USE RUBBER BOOTS IF PIPE IS FLEXIBLE. BOOTS MAY BE KOR-N-SEAL OR EQUIVALENT.

DRAWN BY: T. KOLLN	CITY OF ST.HELENS 265 THE STRAND, ST.HELENS, OR 97051 PH (503)397-6272 FAX (503)397-4016	REVISION: NC
CHECKED BY: .	TITLE: MANHOLE BASE SECTION	DRAWING NO: 360
DATE: .		
SCALE: .		

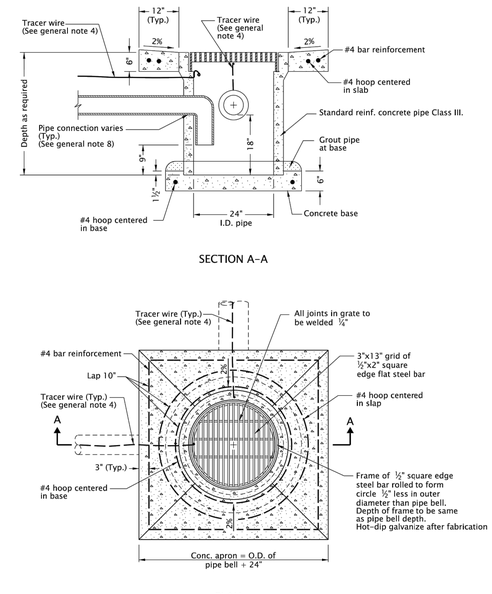

GENERAL NOTES FOR ALL DETAILS:

1. Grates shall be bicycle-safe.
2. Precast concrete inlets may be used when specified or approved. All precast inlets shall conform to requirements of ASTM C913.
3. Anchor vertical leg of inlet pipe if not a glued joint.
4. See Std. Dwg. RD336 for tracer wire details.
5. All reinforcement shall be 2" clear of nearest face of conc., unless otherwise shown.
6. Max. connecting pipe diameter varies with pipe material.
7. All concrete shall be commercial grade concrete.
8. See Std. Dwg. RD339 for pipe to structure connections.
9. Location, elevation, diameter, slope, and number of pipe(s) varies, see project plans.

CALC. BOOK NO. N/A

BASELINE REPORT DATE 14-JUL-2014

NOTE: All material and workmanship shall be in accordance with the current Oregon Standard Specifications

The selection and use of this Standard Drawing, while designed in accordance with generally accepted engineering principles and practices, is the sole responsibility of the user and should not be used without consulting a Registered Professional Engineer.

OREGON STANDARD DRAWINGS

AREA DRAINAGE BASIN OR FIELD INLET

2018

DATE	REVISION DESCRIPTION

Effective Date: December 1, 2018 - May 31, 2019

RD374

rd374.dgn 25-JUL-2017

RD374

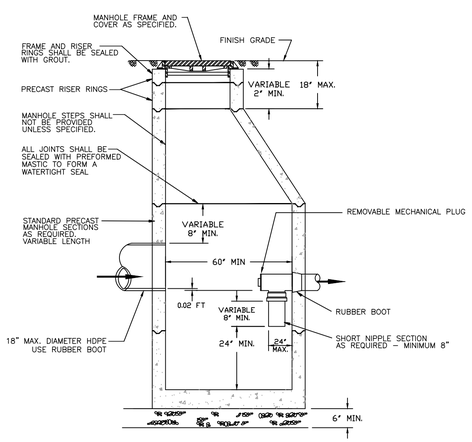

NOTES:

1. ALL PRECAST SECTIONS SHALL CONFORM TO REQUIREMENTS OF ASTM C 478.
2. ALL CONNECTING PIPE SHALL HAVE A FLEXIBLE JOINT WITHIN 18" OF MANHOLE WALL.

DRAWN BY: T. KOLLN	CITY OF ST.HELENS 265 THE STRAND, ST.HELENS, OR 97051 PH (503)397-6272 FAX (503)397-4016	REVISION: NC
CHECKED BY: .	TITLE: POLLUTION CONTROL MANHOLE INSIDE ELBOW	DRAWING NO: 355
DATE: .		
SCALE: .		

Plotted: Jan 10, 2022 - 5:56pm keith.buisman I:\Project\19800\19823\CADD\ACAD\Dwg\C19823C2B.dwg Layout Name: 2B-4

City of St. Helens FOUNDED 1850

REGISTERED PROFESSIONAL ENGINEER 72,629 OREGON JUNE 11, 2008 KEITH BUISMAN

PRELIMINARY

EXPIRES: 12/31/2023

Otak

Otak, Inc.
808 SW Third Avenue, Ste. 800
Portland, OR 97204
503. 287. 6825
www.otak.com

S. 1ST AND STRAND STREETS ROAD AND UTILITY EXTENSIONS

ST. HELENS, OREGON

DETAILS

STORM AND SANITARY SEWER DETAILS

TITLE

#	DATE	DESCRIPTION

REVISIONS

NAVD88

DATUM

OTAK CAD KJB

DRAWN BY CHECKED BY

90% PLANS

STATUS

JANUARY 10, 2022

DATE

19823

PROJECT NUMBER

2B-4

© 2021 OTAK, INC.

If this drawing is not 22" x 34", it has been reduced/enlarged. Scale accordingly.

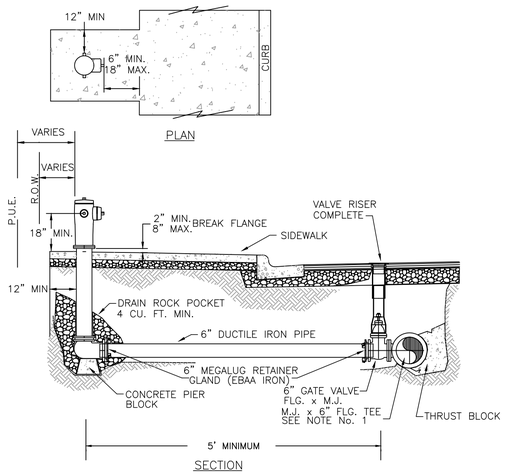

NOTES:

1. KENNEDY GUARDIAN OR OTHER APPROVED CITY HYDRANT. (VARIFY APPROVED HYDRANTS WITH CITY OF ST. HELENS MAINTENANCE DEPT. @ 503-397-3532)
2. NO OBSTRUCTIONS WITHIN 3 FT. OF FIRE HYDRANT
3. SIDEWALK SHALL BE WIDENED AROUND FIRE HYDRANT
4. INSTALL 3-FT X 3-FT X 8-IN PCC RESTRAINT COLLAR WHEN NOT WITHIN PCC SIDEWALK

DRAWN BY: T. KOLLN	CITY OF ST.HELENS 265 THE STRAND, ST.HELENS, OR 97051 PH (503)397-6272 FAX (503)397-4016	REVISION: NC
CHECKED BY:	TITLE: FIRE HYDRANT INSTALLATION	DRAWING NO: 400
DATE:		
SCALE:		

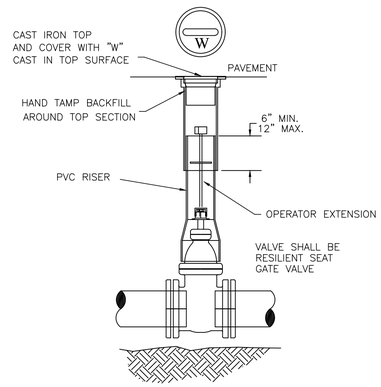

NOTES:

1) VALVE BOX NOT TO REST ON OPERATING ASSEMBLY.
2) OPERATOR EXTENSION REQUIRED WHEN VALVE NUT IS DEEPER THAN 3 FEET FROM FINISHED GRADE.
3) CENTER VALVE BOX ON AXIS OF OPERATOR NUT.
4) PROVIDE 24" SQUARE BY 4" THICK CONCRETE PAD AROUND VALVE BOX OUTSIDE OF PAVED AREAS.
5) ALL VALVES AND FITTINGS SHALL BE MECHANICAL JOINT.
6) SEE STANDARD DETAIL FOR FLANGE UP VALVE BOX AND COVER.

DRAWN BY: T. KOLLN	CITY OF ST.HELENS 265 THE STRAND, ST.HELENS, OR 97051 PH (503)397-6272 FAX (503)397-4016	REVISION: NC
CHECKED BY:	TITLE: GATE VALVE SETTING DETAIL	DRAWING NO: 410
DATE:		
SCALE:		

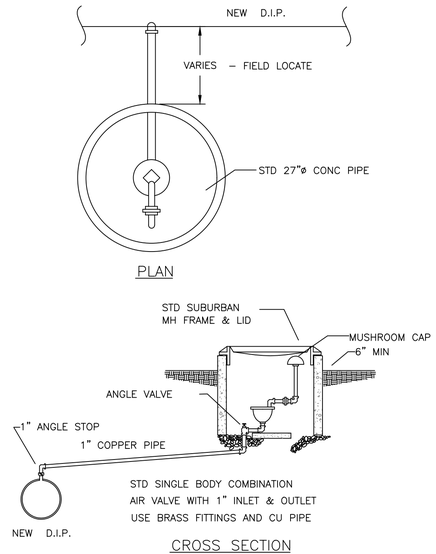

DRAWN BY: T. KOLLN	CITY OF ST.HELENS 265 THE STRAND, ST.HELENS, OR 97051 PH (503)397-6272 FAX (503)397-4016	REVISION: NC
CHECKED BY:	TITLE: AIR RELEASE VALVE	DRAWING NO: 415
DATE:		
SCALE:		

(HORIZONTAL)
BEARING AREA OF THRUST BLOCKS IN SQ. FT.

FITTING SIZE	TEE	90° BEND	45° BEND	22 1/2° BEND	11 1/4° BEND
4	1.3	1.9	1.3		
6	2.8	4.0	2.1	1.3	
8	5.1	7.1	3.9	2.0	1.3
12	11.3	16.0	8.8	4.5	2.3

VOLUME OF THRUST BLOCK IN CU. YDS. (VERTICAL)

FITTING SIZE	BEND ANGLE		
	45°	22.5°	11.25°
4	1.1	0.4	0.2
6	2.7	1.0	0.4
8	4.0	1.5	0.6
12	8.5	3.2	1.3

VALUES BASED ON 150 PSI WATER PRESSURE AND 1500 PSF SOIL BEARING CAPACITY.

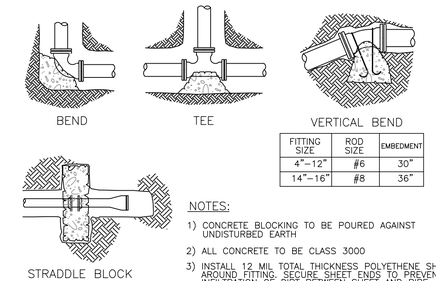

FITTING SIZE	ROD SIZE	EMBEDMENT
4"-12"	#6	30"
14"-16"	#8	36"

NOTES:

1) CONCRETE BLOCKING TO BE POURED AGAINST UNDISTURBED EARTH
2) ALL CONCRETE TO BE CLASS 3000
3) INSTALL 12 MIL TOTAL THICKNESS POLYETHENE SHEET AROUND FITTING. SECURE SHEET ENDS TO PREVENT INFILTRATION OF DIRT BETWEEN SHEET AND PIPE FITTING PRIOR TO POURING THRUST BLOCKING
4) PROTECT MECHANICAL JOINT FOLLOWERS AND BOLTS FROM CONCRETE WITH TEMPOARY FORMS AND POLYETHENE SHEETING SEE NOTE No. 3

DRAWN BY: T. KOLLN	CITY OF ST.HELENS 265 THE STRAND, ST.HELENS, OR 97051 PH (503)397-6272 FAX (503)397-4016	REVISION: NC
CHECKED BY:	TITLE: THRUST BLOCKING DETAILS	DRAWING NO: 430
DATE:		
SCALE:		

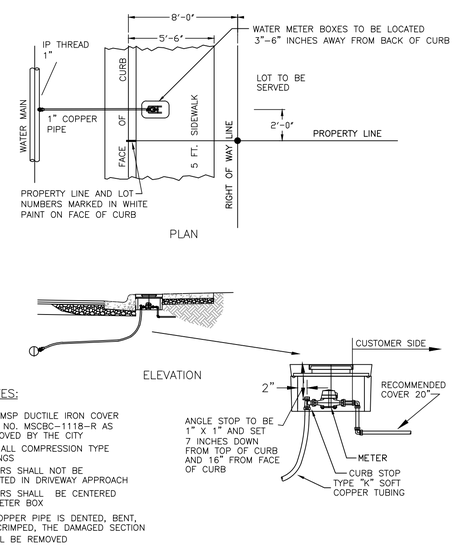

NOTES:

1. USE MSP DUCTILE IRON COVER PART NO. MSCBC-1118-R AS APPROVED BY THE CITY
2. USE ALL COMPRESSION TYPE FITTINGS
3. METERS SHALL NOT BE LOCATED IN DRIVEWAY APPROACH
4. METERS SHALL BE CENTERED IN METER BOX
5. IF COPPER PIPE IS DENTED, BENT, OR CRIMPED, THE DAMAGED SECTION SHALL BE REMOVED

DRAWN BY: T. KOLLN	CITY OF ST.HELENS 265 THE STRAND, ST.HELENS, OR 97051 PH (503)397-6272 FAX (503)397-4016	REVISION: NC
CHECKED BY:	TITLE: SINGLE WATER SERVICE INSTALLATION	DRAWING NO: 405
DATE:		
SCALE:		

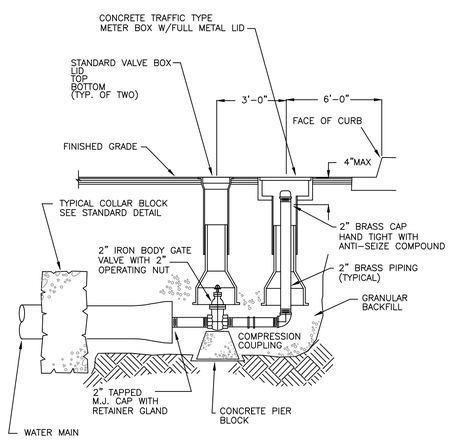

DRAWN BY: T. KOLLN	CITY OF ST.HELENS 265 THE STRAND, ST.HELENS, OR 97051 PH (503)397-6272 FAX (503)397-4016	REVISION: NC
CHECKED BY:	TITLE: PERMANENT 2" BLOWOFF	DRAWING NO: 420
DATE:		
SCALE:		

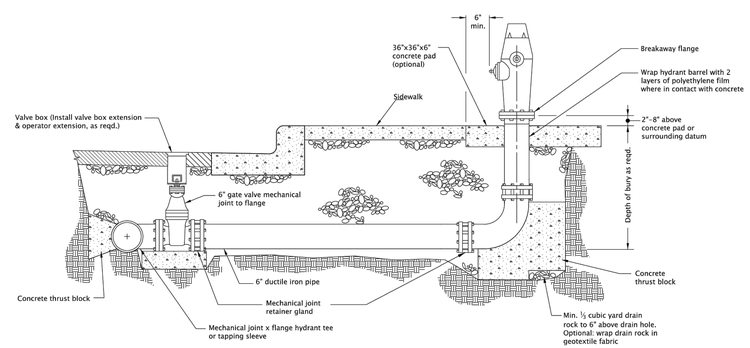

HYDRANT ASSEMBLY

GENERAL NOTES FOR ALL DETAILS ON THIS SHEET:

1. When pipe is shorter than 18', no joints allowed. Use mechanical joint retainer glands. Two ¾" galvanized tie rods may be used in lieu of thrust blocks for installations less than 18' long. Coat tie rods with two coats of coal tar epoxy.
2. When pipe is longer that 18' retainer glands not required.
3. There shall be a minimum of 18" horizontal clearance around hydrant.
4. When placed adjacent to curb, hydrant port shall be 24" from face of curb.
5. Concrete thrust blocks shall be constructed as per thrust blocking Std. Dwg. RD250. Do not block drain holes.
6. Extensions required for hydrant systems shall be installed to the manufacturer's specifications.
7. Hydrants shall be placed to provide a minimum of 5' clearance from driveways, poles, and other obstructions.
8. Hydrant pumper port shall face direction of access.
9. Set hydrant plumb in all directions.
10. See project plans for details not shown.

CALC. BOOK NO. N/A

SDR DATE 25-JUL-2017

The selection and use of this Standard Drawing, while designed in accordance with generally accepted engineering principles and practices, is the sole responsibility of the user and should not be used without consulting a Registered Professional Engineer.

NOTE: All material and workmanship shall be in accordance with the current Oregon Standard Specifications

OREGON STANDARD DRAWINGS

HYDRANT INSTALLATION

2021

DATE	REVISION DESCRIPTION

RD254

Effective Date: December 1, 2021 - May 31, 2022

RD254.dgn 20-JUL-2020

RD254

City of St. Helens FOUNDED 1850

REGISTERED PROFESSIONAL ENGINEER 72,629 OREGON JUNE 11, 2008 KEITH BUISMAN

PRELIMINARY

EXPIRES: 12/31/2023

Otak

Otak, Inc.
808 SW Third Avenue, Ste. 800
Portland, OR 97204
503. 287. 6825
www.otak.com

S. 1ST AND STRAND STREETS ROAD AND UTILITY EXTENSIONS

ST. HELENS, OREGON

DETAILS

WATER DETAILS

TITLE

#	DATE	DESCRIPTION

REVISIONS

NAVD88

DATUM

OTAK CAD KJB

DRAWN BY CHECKED BY

90% PLANS

STATUS

JANUARY 10, 2022

DATE

19823

PROJECT NUMBER

2B-5

© 2021 OTAK, INC.

If this drawing is not 22" x 34", it has been reduced/enlarged. Scale accordingly.

Plotted: Jan 10, 2022-5:56pm, keith.buisman L:\Projects\19800\19823\CADD\ACAD\Dwgs\C\19823-2B-5.dwg Layout Name: 2B-5

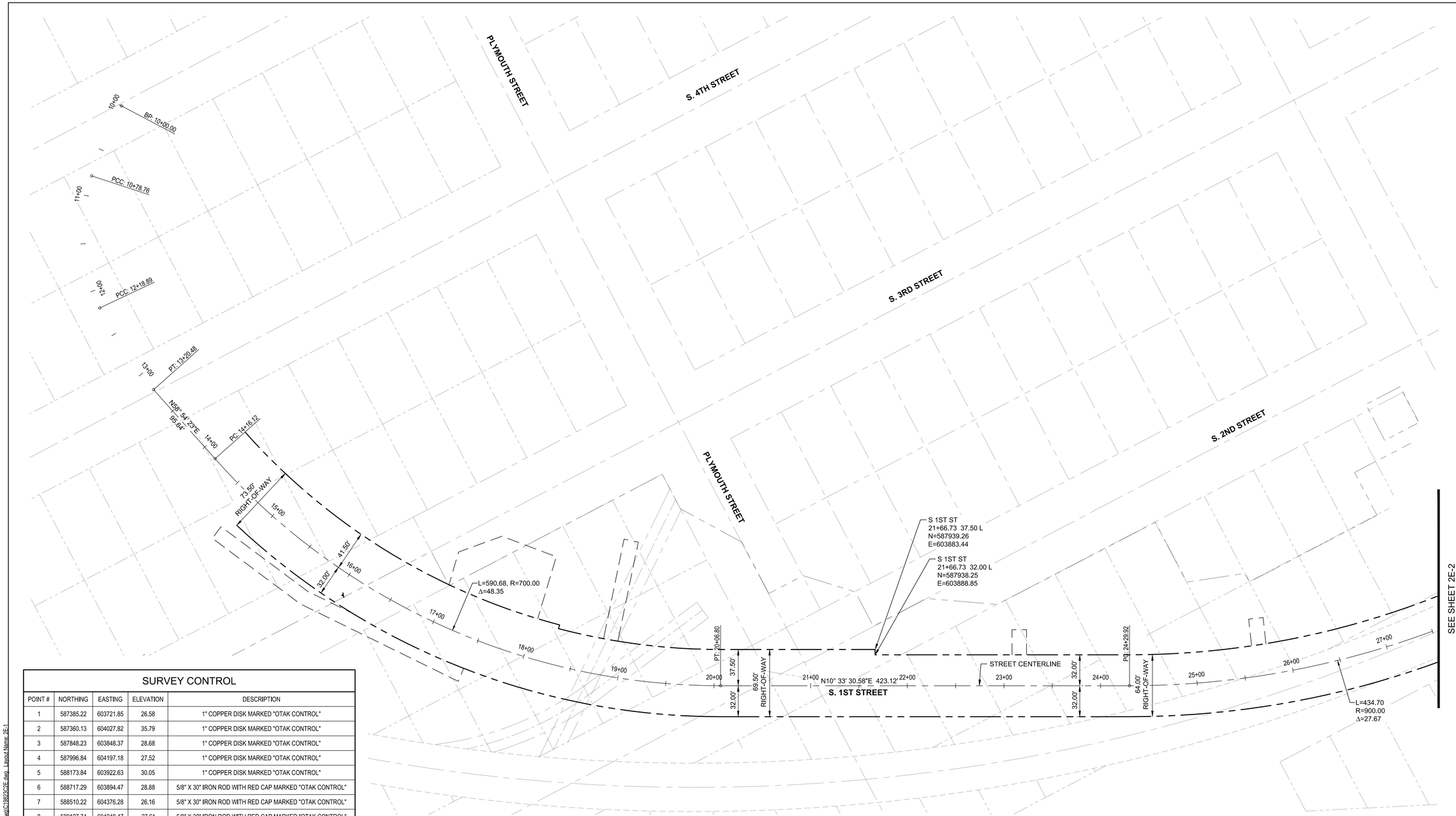

SURVEY CONTROL

POINT #	NORTHING	EASTING	ELEVATION	DESCRIPTION
1	587385.22	603721.85	26.58	1" COPPER DISK MARKED "OTAK CONTROL"
2	587360.13	604027.82	35.79	1" COPPER DISK MARKED "OTAK CONTROL"
3	587848.23	603848.37	28.68	1" COPPER DISK MARKED "OTAK CONTROL"
4	587996.84	604197.18	27.52	1" COPPER DISK MARKED "OTAK CONTROL"
5	588173.84	603922.63	30.05	1" COPPER DISK MARKED "OTAK CONTROL"
6	588717.29	603894.47	28.88	5/8" X 30" IRON ROD WITH RED CAP MARKED "OTAK CONTROL"
7	588510.22	604376.28	26.16	5/8" X 30" IRON ROD WITH RED CAP MARKED "OTAK CONTROL"
8	589127.74	604248.47	27.61	5/8" X 30" IRON ROD WITH RED CAP MARKED "OTAK CONTROL"
9	589430.52	603960.91	32.99	1" COPPER DISK MARKED "OTAK CONTROL"
10	589362.73	603742.08	37.17	1" COPPER DISK MARKED "OTAK CONTROL"
11	587195.62	603309.21	36.47	5/8" X 30" IRON ROD WITH RED CAP MARKED "OTAK CONTROL"
12	589592.70	604159.69	27.92	PLASTIC HUB
13	589626.88	604032.61	34.46	PLASTIC HUB
14	589116.14	603757.63	33.96	1" COPPER DISK MARKED "OTAK CONTROL"
15	589625.52	603987.28	39.61	1" COPPER DISK MARKED "OTAK CONTROL"
17	587343.46	603125.62	45.34	1" COPPER DISK MARKED "OTAK CONTROL"
18	589547.46	603913.38	38.32	1" COPPER DISK MARKED "OTAK CONTROL"
19	589784.02	604064.91	30.06	PK NAIL WITH 1-1/2" COPPER WASHER MARKED "OTAK CONTROL"
20	589803.82	603976.66	31.83	PK NAIL WITH 1-1/2" COPPER WASHER MARKED "OTAK CONTROL"
21	589709.23	603821.85	42.90	1" COPPER DISK MARKED "OTAK CONTROL"

City of St. Helens
FOUNDED 1850

REGISTERED PROFESSIONAL ENGINEER
72,629
PRELIMINARY
OREGON
JUNE 11, 2022
KEITH BUISMAN

EXPIRES: 12/31/2023

Otak

Otak, Inc.
808 SW Third Avenue, Ste. 800
Portland, OR 97204
503. 287. 6825
www.otak.com

S. 1ST AND STRAND STREETS ROAD AND UTILITY EXTENSIONS

ST. HELENS, OREGON
HORIZONTAL CONTROL PLANS

HORIZONTAL CONTROL PLAN

TITLE

#	DATE	DESCRIPTION

REVISIONS

NAVD88
DATUM

OTAK CAD — DRAWN BY
KJB — CHECKED BY

90% PLANS
STATUS

JANUARY 10, 2022
DATE

19823
PROJECT NUMBER

2E-1

© 2021 OTAK, INC.

If this drawing is not 22" x 34", it has been reduced/enlarged. Scale accordingly.

Plotted: Jan 10, 2022 - 5:58pm keith.buisman L:\Project\19800\19823\CADD\ACAD\Dwg\C19823-2E.dwg Layout Name: 2E-1

City of St. Helens
FOUNDED 1850

REGISTERED PROFESSIONAL ENGINEER
72,629
OREGON
JUNE 11, 2009
KEITH BUISMAN

PRELIMINARY

EXPIRES: 12/31/2023

Otak

Otak, Inc.
808 SW Third Avenue, Ste. 800
Portland, OR 97204
503. 287. 6825
www.otak.com

S. 1ST AND STRAND STREETS ROAD AND UTILITY EXTENSIONS

ST. HELENS, OREGON
HORIZONTAL CONTROL PLANS

HORIZONTAL CONTROL PLAN

TITLE

#	DATE	DESCRIPTION

REVISIONS

NAVD88
DATUM

OTAK CAD — KJB
DRAWN BY — CHECKED BY

90% PLANS
STATUS

JANUARY 10, 2022
DATE

19823
PROJECT NUMBER

2E-2

© 2021 OTAK, INC.

If this drawing is not 22" x 34", it has been reduced/enlarged. Scale accordingly.

Plotted: Jan 10, 2022 - 5:58pm keith.buisman L:\Projects\19800\19823\CADD\ACAD\Dwg\C19823C2E.dwg Layout Name: 2E-2

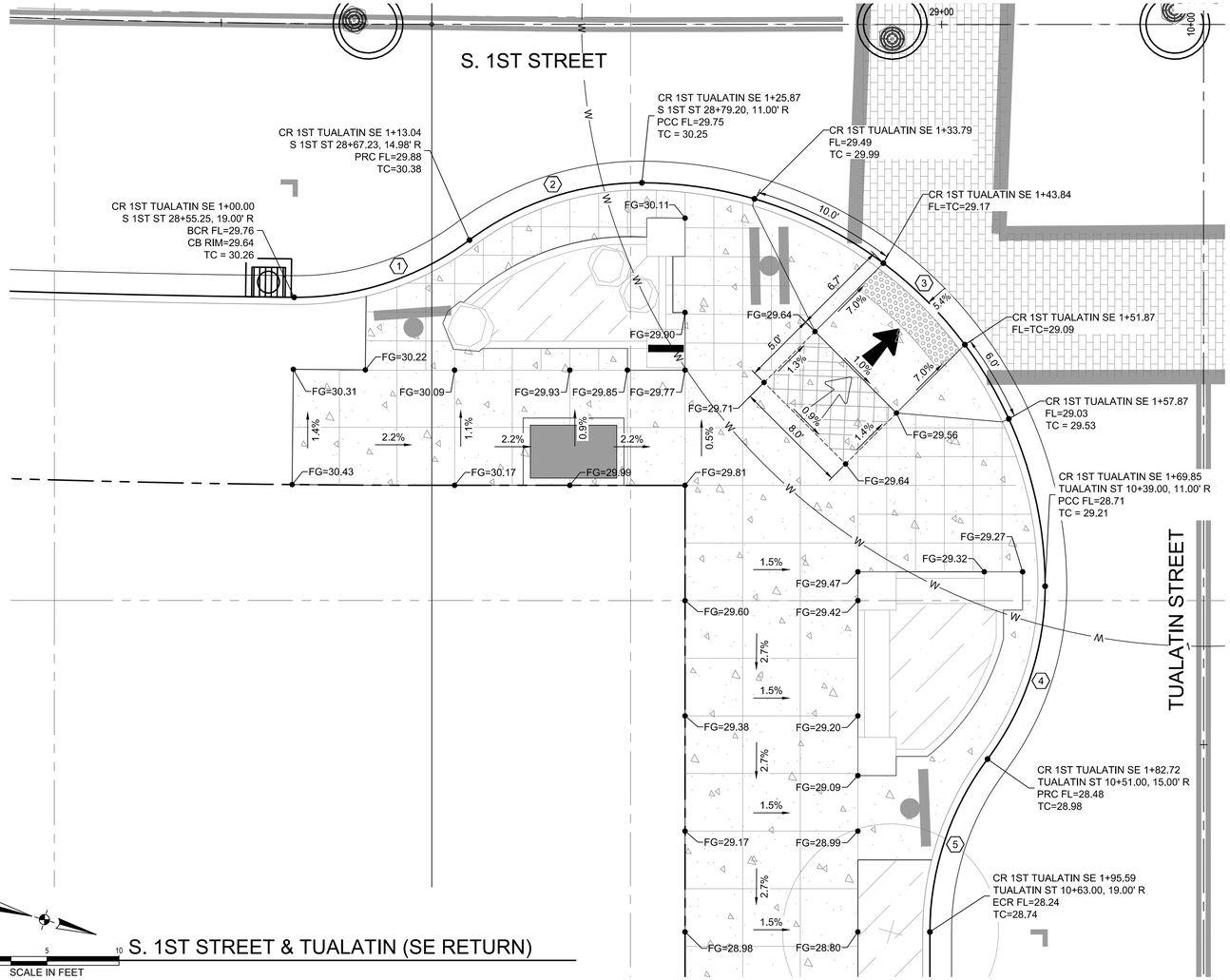

S. 1ST STREET & TUALATIN (SE RETURN)

0 5 10
SCALE IN FEET

CURB RETURN CURVE DATA			
NO.	STATION & OFFSET		CURVE
1	BCR=	S 1ST ST 28+55.25 19.00 R	D = 37°20'59" R = 20.00 T = 6.76 L = 13.04
	ECR=	28+67.23 14.98 R S 1ST ST	
2	BCR=	S 1ST ST 28+67.23 14.98 R	D = 36°45'13" R = 20.00 T = 6.64 L = 12.83
	ECR=	28+79.20 11.00 R S 1ST ST	
3	BCR=	S 1ST ST 28+79.20 11.00 R	D = 90°00'00" R = 28.00 T = 28.00 L = 43.98
	ECR=	10+39.00 11.00 R TUALATIN ST	
4	BCR=	TUALATIN ST 10+39.00 11.00 R	D = 36°52'12" R = 20.00 T = 6.67 L = 12.87
	ECR=	10+51.00 15.00 R TUALATIN ST	
5	BCR=	TUALATIN ST 10+51.00 15.00 R	D = 36°52'12" R = 20.00 T = 6.67 L = 12.87
	ECR=	10+63.00 19.00 R TUALATIN ST	

GENERAL NOTES

1. CONTRACTOR SHALL BE RESPONSIBLE FOR MEETING ALL AMERICANS WITH DISABILITIES ACT (ADA) REQUIREMENTS AS DEFINED BY THE PUBLIC RIGHTS-OF-WAY ACCESSIBILITY GUIDELINES (PROWAG).
2. DETAILS AND DIMENSIONS SHOWN ARE APPROXIMATE. SLOPES HOLD OVER ELEVATIONS. CONTRACTOR SHALL TAKE ALL NECESSARY FIELD MEASUREMENTS TO VERIFY ADA COMPLIANCE AND NOTIFY THE ENGINEER IF RAMPS CANNOT BE CONSTRUCTED AS SHOWN.
3. REFER TO ODOT STD. DWG RD 900 FOR ADA REQUIREMENTS.
4. CONTRACTOR SHALL NOTIFY ENGINEER AND CITY OF ST. HELENS 24 HOURS PRIOR TO CONCRETE POURS TO INSPECT FORMS AND VERIFY ADA STANDARDS CAN BE ACHIEVED.
5. CONTRACTOR SHALL PROTECT FRESHLY POURED CONCRETE FROM VANDALISM OR OTHER DAMAGE FOR A MINIMUM OF 24 HOURS OR UNTIL CURED ENOUGH TO SUPPORT TYPICAL USE, WHICHEVER IS LONGER. ANY CONCRETE DAMAGE WITHIN THIS TIME PERIOD SHALL BE REPAIRED AT NO COST TO THE CITY.
6. CONTRACTOR SHALL SUBMIT TRAFFIC CONTROL PLANS TO THE CITY OF ST. HELENS FOR APPROVAL PRIOR TO CONSTRUCTION. TWO WAY TRAFFIC WITH MINIMUM LANE WIDTHS OF 10 FEET MUST BE MAINTAINED FOR THE DURATION OF CONSTRUCTION.
7. CONTRACTOR SHALL SUBMIT TEMPORARY PEDESTRIAN ACCESS ROUTE PLANS TO THE CITY OF ST. HELENS FOR APPROVAL PRIOR TO CONSTRUCTION. PEDESTRIAN DETOUR ROUTES MUST BE NO LONGER THAN 1 BLOCK LENGTH. THE MAXIMUM CLOSURE TIME FOR ANY SINGLE CURB RAMP SHALL BE ONE WEEK.
8. CONTRACTOR SHALL NOTIFY ENGINEER ONCE RAMPS ARE COMPLETED FOR A POST RAMP CONSTRUCTION INSPECTION. ENGINEER SHALL PROVIDE ODOT STANDARD RAMP INSPECTION FORMS TO THE CITY OF ST. HELENS.

CURB RETURN LEGEND

TURNING SPACE MIN. LEVEL AREA 4'X4' 4'X5' WHEN CONSTRAINED (WITH LONGER DIMENSION IN DIRECTION OF PEDESTRIAN CROSSING). FOR THE PURPOSED OF THIS APPLICATION, A MAX. 2.0% FINISHED SURFACE SLOPE (FOR DRAINAGE) IS CONSIDERED LEVEL.

TRUNCATED DOME DETECTABLE WARNING SURFACE

SLOPE 1.5% MAX.
(MAX. 2.0% FINISHED SURFACE SLOPE)
(NORMAL SIDEWALK CROSS SLOPE)

SLOPE 7.5% MAX.
(MAX. 8.3% FINISHED SURFACE SLOPE)
(RAMP LENGTH 15' MAX., MEASURED ALONG FINISHED SURFACE SLOPE)

COUNTER SLOPE (4% MAX)

FL FLOW LINE ELEVATION

TS TOP OF SIDEWALK/PATH ELEVATION

WING NOTES:

1. WING FLARES SHALL BE 6' LONG UNLESS OTHERWISE NOTED.
2. WING FLARES SHALL BE 10% MAX.
3. WING FLARES SHALL NOT EXCEED 15' LENGTH MEASURED ALONG CURB LINE AND SHALL BE STRAIGHT GRADED.

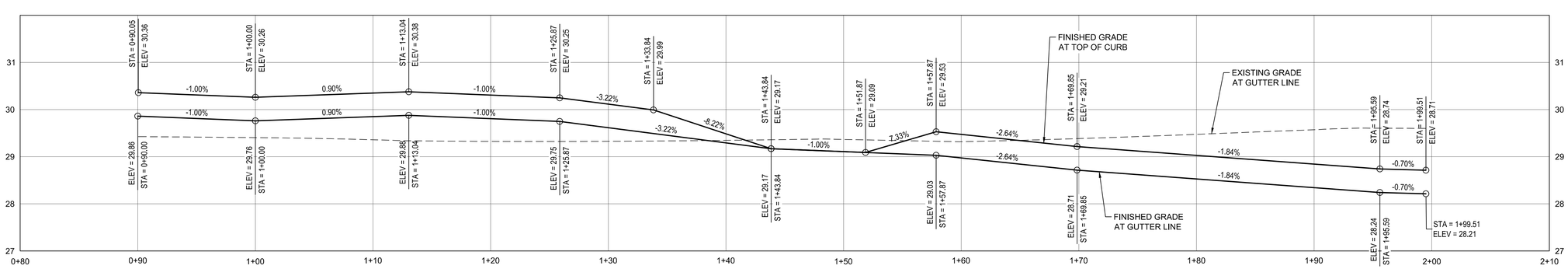

S. 1ST STREET & TUALATIN PROFILE (SE RETURN)

HORZ 0 5 10
VERT 0 1.25 2.5
SCALE IN FEET

City of St. Helens FOUNDED 1850

REGISTERED PROFESSIONAL ENGINEER 72,629 OREGON JUNE 11, 2008 KEITH BUISMAN
PRELIMINARY
EXPIRES: 12/31/2023

Otak
Otak, Inc.
808 SW Third Avenue, Ste. 800
Portland, OR 97204
503. 287. 6825
www.otak.com

S. 1ST AND STRAND STREETS ROAD AND UTILITY EXTENSIONS

ST. HELENS, OREGON
CURB RETURNS

S. 1ST STREET & TUALATIN (SE RETURN)

TITLE		
#	DATE	DESCRIPTION

REVISIONS

NAVD88
DATUM

OTAK CAD — KJB
DRAWN BY — CHECKED BY

90% PLANS
STATUS

JANUARY 10, 2022
DATE

19823
PROJECT NUMBER

2F-1

© 2021 OTAK, INC.

If this drawing is not 22" x 34", it has been reduced/enlarged. Scale accordingly.

Plotted: Jan 10, 2022 - 6:05pm keith.buisman L:\Project\19800\19823\CADD\ACAD\Dwg\C\19823C2F.dwg Layout Name: 2F-1

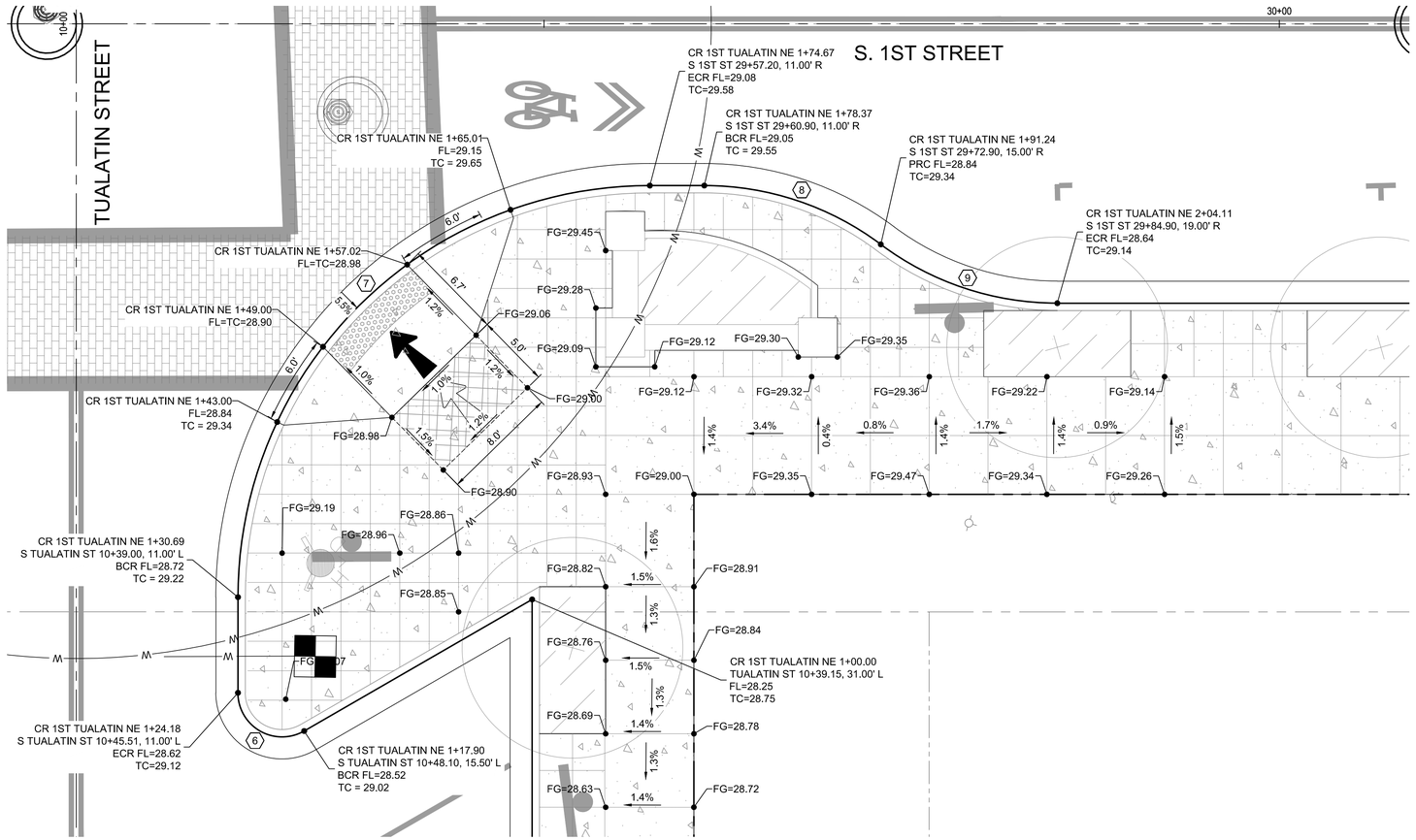

S. 1ST STREET & TUALATIN (NE RETURN)

CURB RETURN CURVE DATA			
NO.	STATION & OFFSET		CURVE
6	BCR=	TUALATIN ST 10+48.10 15.50 L	D = 120°00'00" R = 3.00 T = 5.20 L = 6.28
	ECR=	10+45.51 11.00 L TUALATIN ST	
7	BCR=	TUALATIN ST 10+39.00 11.00 L	D = 90°00'00" R = 28.00 T = 28.00 L = 43.98
	ECR=	29+57.20 11.00 R S 1ST ST	
8	BCR=	S 1ST ST 29+60.90 11.00 R	D = 36°52'12" R = 20.00 T = 6.67 L = 12.87
	ECR=	29+72.90 15.00 R S 1ST ST	
9	BCR=	S 1ST ST 29+72.90 15.00 R	D = 36°52'12" R = 20.00 T = 6.67 L = 12.87
	ECR=	29+84.90 19.00 R S 1ST ST	

GENERAL NOTES

1. CONTRACTOR SHALL BE RESPONSIBLE FOR MEETING ALL AMERICANS WITH DISABILITIES ACT (ADA) REQUIREMENTS AS DEFINED BY THE PUBLIC RIGHTS-OF-WAY ACCESSIBILITY GUIDELINES (PROWAG).
2. DETAILS AND DIMENSIONS SHOWN ARE APPROXIMATE. SLOPES HOLD OVER ELEVATIONS. CONTRACTOR SHALL TAKE ALL NECESSARY FIELD MEASUREMENTS TO VERIFY ADA COMPLIANCE AND NOTIFY THE ENGINEER IF RAMPS CANNOT BE CONSTRUCTED AS SHOWN.
3. REFER TO ODOT STD. DWG RD 900 FOR ADA REQUIREMENTS.
4. CONTRACTOR SHALL NOTIFY ENGINEER AND CITY OF ST. HELENS 24 HOURS PRIOR TO CONCRETE POURS TO INSPECT FORMS AND VERIFY ADA STANDARDS CAN BE ACHIEVED.
5. CONTRACTOR SHALL PROTECT FRESHLY POURED CONCRETE FROM VANDALISM OR OTHER DAMAGE FOR A MINIMUM OF 24 HOURS OR UNTIL CURED ENOUGH TO SUPPORT TYPICAL USE, WHICHEVER IS LONGER. ANY CONCRETE DAMAGE WITHIN THIS TIME PERIOD SHALL BE REPAIRED AT NO COST TO THE CITY.
6. CONTRACTOR SHALL SUBMIT TRAFFIC CONTROL PLANS TO THE CITY OF ST. HELENS FOR APPROVAL PRIOR TO CONSTRUCTION. TWO WAY TRAFFIC WITH MINIMUM LANE WIDTHS OF 10 FEET MUST BE MAINTAINED FOR THE DURATION OF CONSTRUCTION.
7. CONTRACTOR SHALL SUBMIT TEMPORARY PEDESTRIAN ACCESS ROUTE PLANS TO THE CITY OF ST. HELENS FOR APPROVAL PRIOR TO CONSTRUCTION. PEDESTRIAN DETOUR ROUTES MUST BE NO LONGER THAN 1 BLOCK LENGTH. THE MAXIMUM CLOSURE TIME FOR ANY SINGLE CURB RAMP SHALL BE ONE WEEK.
8. CONTRACTOR SHALL NOTIFY ENGINEER ONCE RAMPS ARE COMPLETED FOR A POST RAMP CONSTRUCTION INSPECTION. ENGINEER SHALL PROVIDE ODOT STANDARD RAMP INSPECTION FORMS TO THE CITY OF ST. HELENS.

CURB RETURN LEGEND

TURNING SPACE MIN. LEVEL AREA 4'X4' 4'X5' WHEN CONSTRAINED (WITH LONGER DIMENSION IN DIRECTION OF PEDESTRIAN CROSSING). FOR THE PURPOSED OF THIS APPLICATION, A MAX. 2.0% FINISHED SURFACE SLOPE (FOR DRAINAGE) IS CONSIDERED LEVEL.

TRUNCATED DOME DETECTABLE WARNING SURFACE

SLOPE 1.5% MAX.
(MAX. 2.0% FINISHED SURFACE SLOPE)
(NORMAL SIDEWALK CROSS SLOPE)

SLOPE 7.5% MAX.
(MAX. 8.3% FINISHED SURFACE SLOPE)
(RAMP LENGTH 15' MAX., MEASURED ALONG FINISHED SURFACE SLOPE)

COUNTER SLOPE (4% MAX)

FL FLOW LINE ELEVATION

TS TOP OF SIDEWALK/PATH ELEVATION

WING NOTES:

1. WING FLARES SHALL BE 6' LONG UNLESS OTHERWISE NOTED.
2. WING FLARES SHALL BE 10% MAX.
3. WING FLARES SHALL NOT EXCEED 15' LENGTH MEASURED ALONG CURB LINE AND SHALL BE STRAIGHT GRADED.

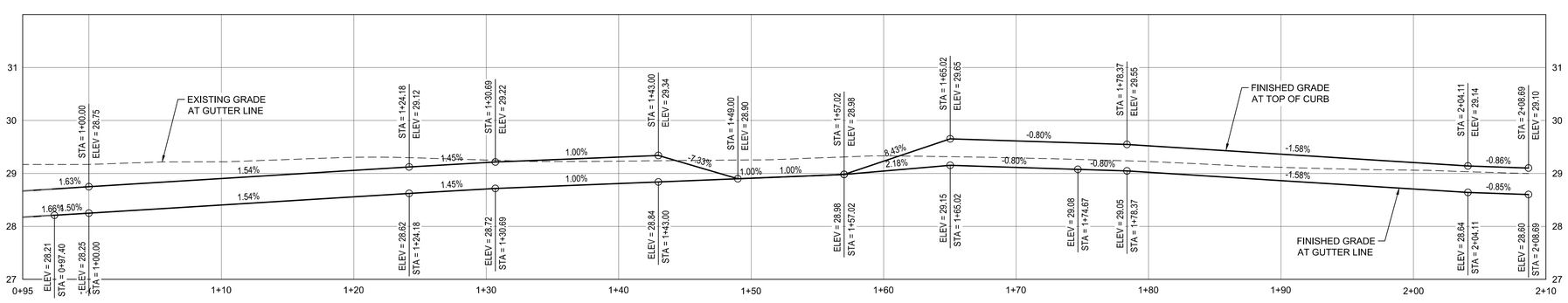

HORZ 0 5 10
VERT 0 1.25 2.5
SCALE IN FEET

S. 1ST STREET & TUALATIN PROFILE (NE RETURN)

City of St. Helens FOUNDED 1850

REGISTERED PROFESSIONAL ENGINEER 72,629 OREGON JUNE 11, 2008 KEITH BUISMAN
PRELIMINARY
EXPIRES: 12/31/2023

Otak
Otak, Inc.
808 SW Third Avenue, Ste. 800
Portland, OR 97204
503. 287. 6825
www.otak.com

S. 1ST AND STRAND STREETS ROAD AND UTILITY EXTENSIONS

ST. HELENS, OREGON
CURB RETURNS

S. 1ST STREET & TUALATIN (NE RETURN)

TITLE

#	DATE	DESCRIPTION

REVISIONS

NAVD88
DATUM

OTAK CAD KJB
DRAWN BY CHECKED BY

90% PLANS
STATUS

JANUARY 10, 2022
DATE

19823
PROJECT NUMBER

2F-2

© 2021 OTAK, INC.

If this drawing is not 22" x 34", it has been reduced/enlarged. Scale accordingly.

Plotted: Jan 10, 2022 - 6:05pm keith.buisman L:\Project\19800\19823\CADD\ACAD\Dwgs\C19823CF.dwg Layout Name: 2F-2

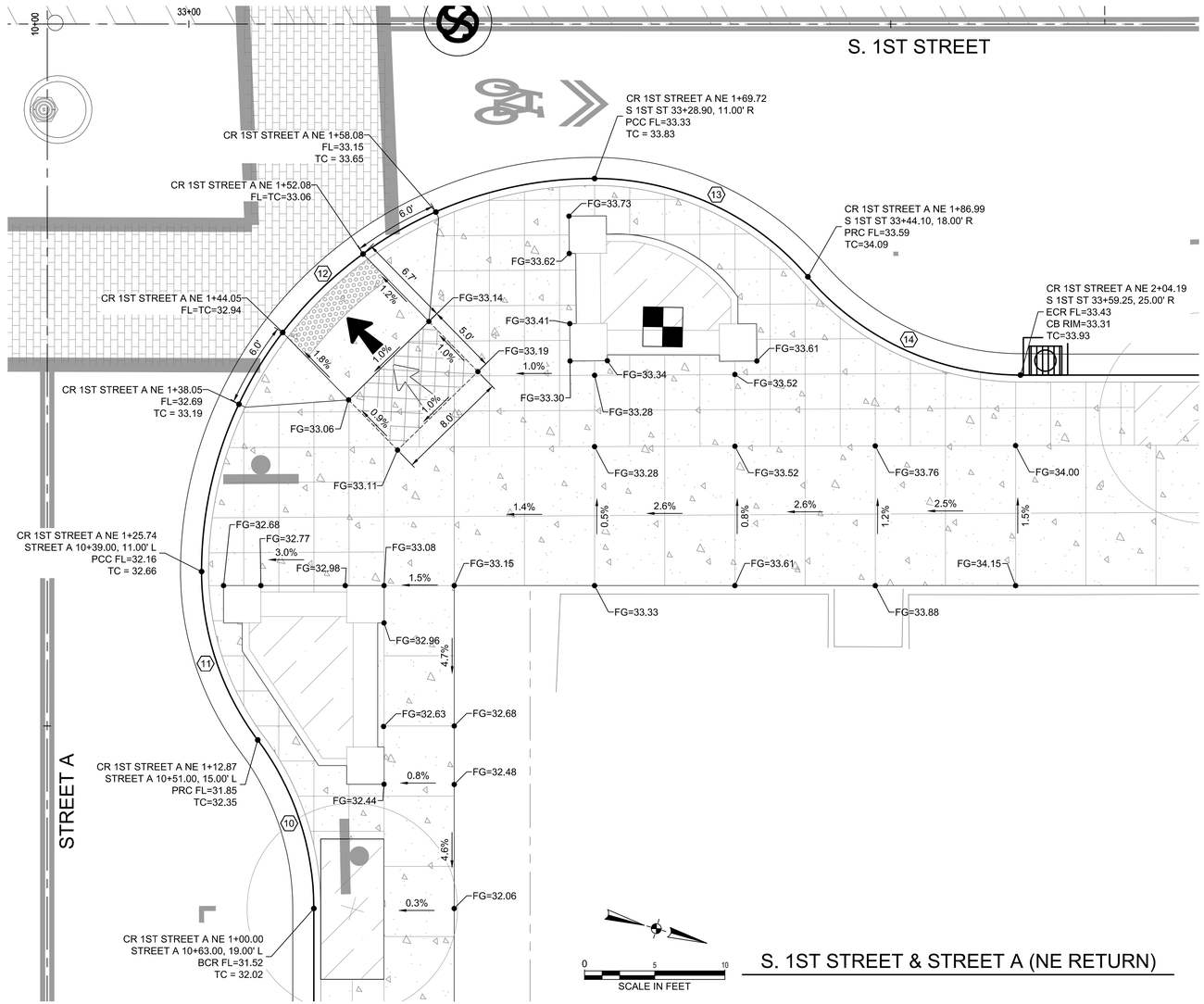

S. 1ST STREET & STREET A (NE RETURN)

0 5 10
SCALE IN FEET

CURB RETURN CURVE DATA		
NO.	STATION & OFFSET	CURVE
10	BCR= STREET A 10+63.00 19.00 L . . ECR= 10+51.00 15.00 L STREET A	D = 36°52'12" R = 20.00 T = 6.67 L = 12.87
11	BCR= STREET A 10+51.00 15.00 L . . ECR= 10+39.00 11.00 L STREET A	D = 36°52'12" R = 20.00 T = 6.67 L = 12.87
12	BCR= STREET A 10+39.00 11.00 L . . ECR= 33+28.90 11.00 R S 1ST ST	D = 90°00'00" R = 28.00 T = 28.00 L = 43.98
13	BCR= S 1ST ST 33+28.90 11.00 R . . ECR= 33+44.10 18.00 R S 1ST ST	D = 49°11'22" R = 20.00 T = 9.15 L = 17.17
14	BCR= S 1ST ST 33+44.10 18.00 R . . ECR= 33+59.25 25.00 R S 1ST ST	D = 49°18'38" R = 20.00 T = 9.18 L = 17.21

GENERAL NOTES

1. CONTRACTOR SHALL BE RESPONSIBLE FOR MEETING ALL AMERICANS WITH DISABILITIES ACT (ADA) REQUIREMENTS AS DEFINED BY THE PUBLIC RIGHTS-OF-WAY ACCESSIBILITY GUIDELINES (PROWAG).
2. DETAILS AND DIMENSIONS SHOWN ARE APPROXIMATE. SLOPES HOLD OVER ELEVATIONS. CONTRACTOR SHALL TAKE ALL NECESSARY FIELD MEASUREMENTS TO VERIFY ADA COMPLIANCE AND NOTIFY THE ENGINEER IF RAMPS CANNOT BE CONSTRUCTED AS SHOWN.
3. REFER TO ODOT STD. DWG RD 900 FOR ADA REQUIREMENTS.
4. CONTRACTOR SHALL NOTIFY ENGINEER AND CITY OF ST. HELENS 24 HOURS PRIOR TO CONCRETE POURS TO INSPECT FORMS AND VERIFY ADA STANDARDS CAN BE ACHIEVED.
5. CONTRACTOR SHALL PROTECT FRESHLY POURED CONCRETE FROM VANDALISM OR OTHER DAMAGE FOR A MINIMUM OF 24 HOURS OR UNTIL CURED ENOUGH TO SUPPORT TYPICAL USE, WHICHEVER IS LONGER. ANY CONCRETE DAMAGE WITHIN THIS TIME PERIOD SHALL BE REPAIRED AT NO COST TO THE CITY.
6. CONTRACTOR SHALL SUBMIT TRAFFIC CONTROL PLANS TO THE CITY OF ST. HELENS FOR APPROVAL PRIOR TO CONSTRUCTION. TWO WAY TRAFFIC WITH MINIMUM LANE WIDTHS OF 10 FEET MUST BE MAINTAINED FOR THE DURATION OF CONSTRUCTION.
7. CONTRACTOR SHALL SUBMIT TEMPORARY PEDESTRIAN ACCESS ROUTE PLANS TO THE CITY OF ST. HELENS FOR APPROVAL PRIOR TO CONSTRUCTION. PEDESTRIAN DETOUR ROUTES MUST BE NO LONGER THAN 1 BLOCK LENGTH. THE MAXIMUM CLOSURE TIME FOR ANY SINGLE CURB RAMP SHALL BE ONE WEEK.
8. CONTRACTOR SHALL NOTIFY ENGINEER ONCE RAMPS ARE COMPLETED FOR A POST RAMP CONSTRUCTION INSPECTION. ENGINEER SHALL PROVIDE ODOT STANDARD RAMP INSPECTION FORMS TO THE CITY OF ST. HELENS.

CURB RETURN LEGEND

TURNING SPACE MIN. LEVEL AREA 4'X4' 4'X5' WHEN CONSTRAINED (WITH LONGER DIMENSION IN DIRECTION OF PEDESTRIAN CROSSING). FOR THE PURPOSED OF THIS APPLICATION, A MAX. 2.0% FINISHED SURFACE SLOPE (FOR DRAINAGE) IS CONSIDERED LEVEL.

TRUNCATED DOME DETECTABLE WARNING SURFACE

SLOPE 1.5% MAX.
(MAX. 2.0% FINISHED SURFACE SLOPE)
(NORMAL SIDEWALK CROSS SLOPE)

SLOPE 7.5% MAX.
(MAX. 8.3% FINISHED SURFACE SLOPE)
(RAMP LENGTH 15' MAX., MEASURED ALONG FINISHED SURFACE SLOPE)

COUNTER SLOPE (4% MAX)

FL FLOW LINE ELEVATION

TS TOP OF SIDEWALK/PATH ELEVATION

WING NOTES:

1. WING FLARES SHALL BE 6' LONG UNLESS OTHERWISE NOTED.
2. WING FLARES SHALL BE 10% MAX.
3. WING FLARES SHALL NOT EXCEED 15' LENGTH MEASURED ALONG CURB LINE AND SHALL BE STRAIGHT GRADED.

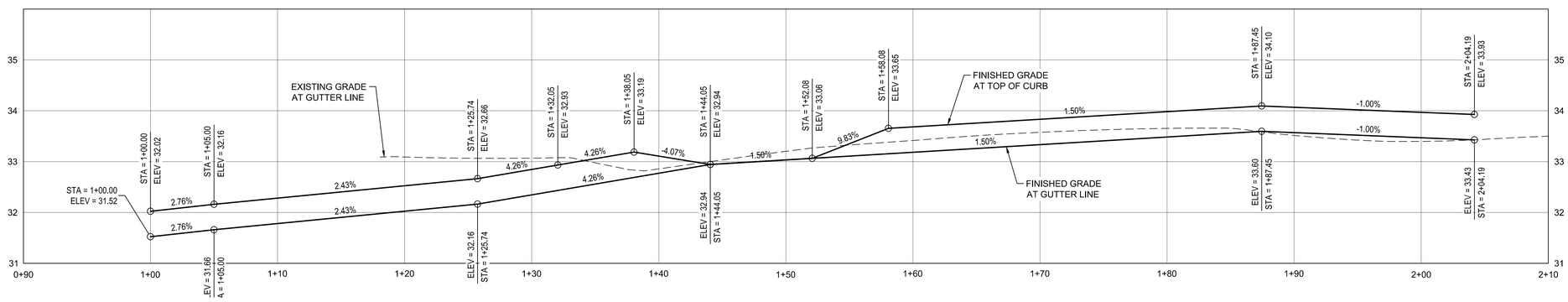

S. 1ST STREET & STREET A PROFILE (NE RETURN)

HORZ 0 5 10
VERT 0 1.25 2.5
SCALE IN FEET

City of St. Helens FOUNDED 1850

REGISTERED PROFESSIONAL ENGINEER 72,629 OREGON JUNE 11, 2009 KEITH BUISMAN
PRELIMINARY
EXPIRES: 12/31/2023

Otak
Otak, Inc.
808 SW Third Avenue, Ste. 800
Portland, OR 97204
503. 287. 6825
www.otak.com

S. 1ST AND STRAND STREETS ROAD AND UTILITY EXTENSIONS

ST. HELENS, OREGON
CURB RETURNS

S. 1ST STREET & STREET A (NE RETURN)

TITLE		
#	DATE	DESCRIPTION

REVISIONS

NAVD88
DATUM

OTAK CAD — KJB
DRAWN BY — CHECKED BY

90% PLANS
STATUS

JANUARY 10, 2022
DATE

19823
PROJECT NUMBER

2F-3

© 2021 OTAK, INC.

If this drawing is not 22" x 34", it has been reduced/enlarged. Scale accordingly.

Plotted: Jan 10, 2022 - 6:06am, keith.buisman L:\Project\19800\19823\CAD\DACAD\Dwg\C19823C2F.dwg Layout Name: 2F-3

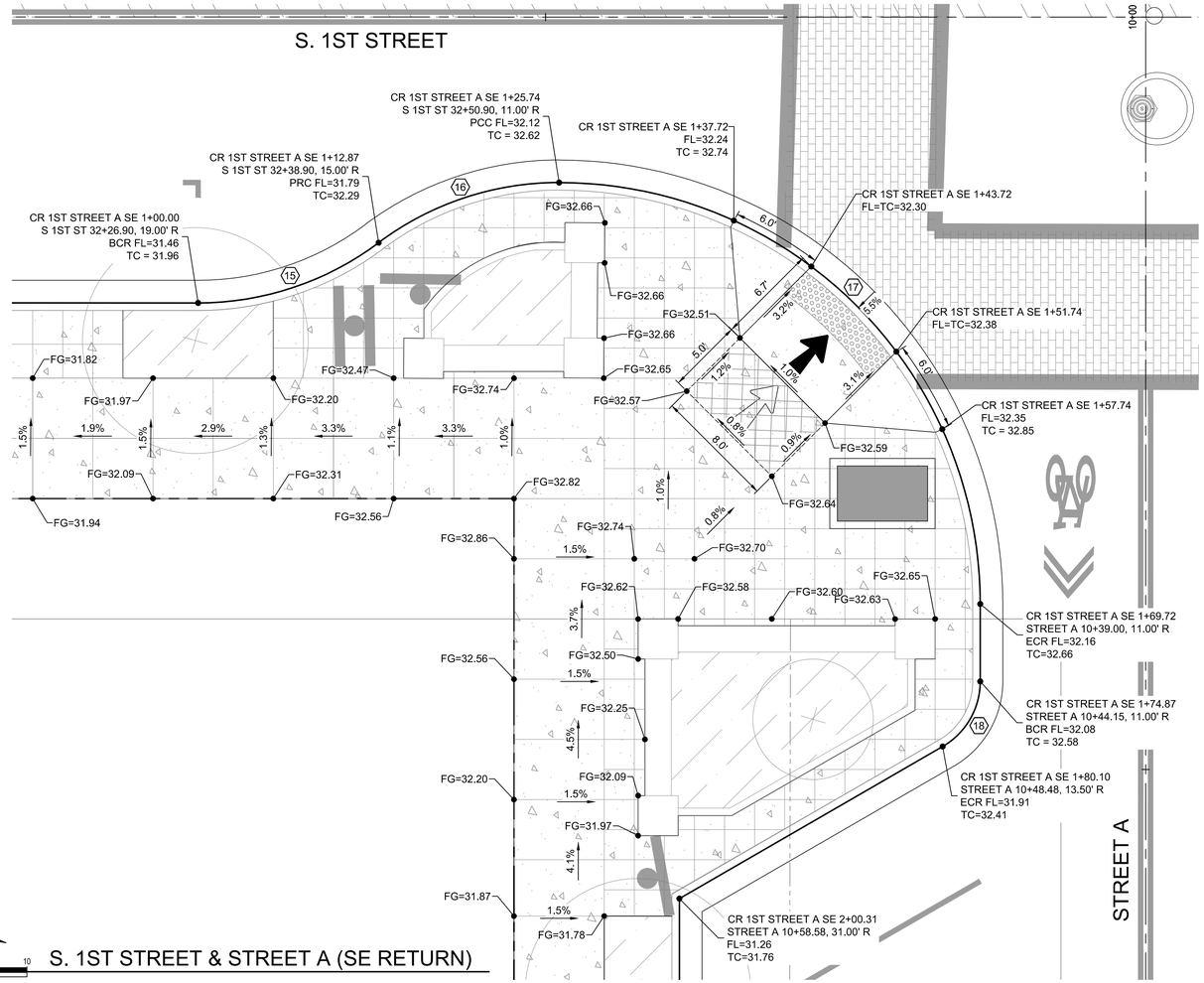

S. 1ST STREET & STREET A (SE RETURN)

CURB RETURN CURVE DATA			
NO.	STATION & OFFSET		CURVE
15	BCR=	S 1ST ST 32+26.90 19.00 R	D = 36°52'12" R = 20.00 T = 6.67 L = 12.87
	ECR=	32+38.90 15.00 R S 1ST ST	
16	BCR=	S 1ST ST 32+38.90 15.00 R	D = 36°52'12" R = 20.00 T = 6.67 L = 12.87
	ECR=	32+50.90 11.00 R S 1ST ST	
17	BCR=	S 1ST ST 32+50.90 11.00 R	D = 90°00'00" R = 28.00 T = 28.00 L = 43.98
	ECR=	10+39.00 11.00 R STREET A	
18	BCR=	STREET A 10+44.15 11.00 R	D = 60°00'00" R = 5.00 T = 2.89 L = 5.24
	ECR=	10+48.48 13.50 R STREET A	

GENERAL NOTES

1. CONTRACTOR SHALL BE RESPONSIBLE FOR MEETING ALL AMERICANS WITH DISABILITIES ACT (ADA) REQUIREMENTS AS DEFINED BY THE PUBLIC RIGHTS-OF-WAY ACCESSIBILITY GUIDELINES (PROWAG).
2. DETAILS AND DIMENSIONS SHOWN ARE APPROXIMATE. SLOPES HOLD OVER ELEVATIONS. CONTRACTOR SHALL TAKE ALL NECESSARY FIELD MEASUREMENTS TO VERIFY ADA COMPLIANCE AND NOTIFY THE ENGINEER IF RAMPS CANNOT BE CONSTRUCTED AS SHOWN.
3. REFER TO ODOT STD. DWG RD 900 FOR ADA REQUIREMENTS.
4. CONTRACTOR SHALL NOTIFY ENGINEER AND CITY OF ST. HELENS 24 HOURS PRIOR TO CONCRETE POURS TO INSPECT FORMS AND VERIFY ADA STANDARDS CAN BE ACHIEVED.
5. CONTRACTOR SHALL PROTECT FRESHLY POURED CONCRETE FROM VANDALISM OR OTHER DAMAGE FOR A MINIMUM OF 24 HOURS OR UNTIL CURED ENOUGH TO SUPPORT TYPICAL USE, WHICHEVER IS LONGER. ANY CONCRETE DAMAGE WITHIN THIS TIME PERIOD SHALL BE REPAIRED AT NO COST TO THE CITY.
6. CONTRACTOR SHALL SUBMIT TRAFFIC CONTROL PLANS TO THE CITY OF ST. HELENS FOR APPROVAL PRIOR TO CONSTRUCTION. TWO WAY TRAFFIC WITH MINIMUM LANE WIDTHS OF 10 FEET MUST BE MAINTAINED FOR THE DURATION OF CONSTRUCTION.
7. CONTRACTOR SHALL SUBMIT TEMPORARY PEDESTRIAN ACCESS ROUTE PLANS TO THE CITY OF ST. HELENS FOR APPROVAL PRIOR TO CONSTRUCTION. PEDESTRIAN DETOUR ROUTES MUST BE NO LONGER THAN 1 BLOCK LENGTH. THE MAXIMUM CLOSURE TIME FOR ANY SINGLE CURB RAMP SHALL BE ONE WEEK.
8. CONTRACTOR SHALL NOTIFY ENGINEER ONCE RAMPS ARE COMPLETED FOR A POST RAMP CONSTRUCTION INSPECTION. ENGINEER SHALL PROVIDE ODOT STANDARD RAMP INSPECTION FORMS TO THE CITY OF ST. HELENS.

CURB RETURN LEGEND

TURNING SPACE MIN. LEVEL AREA 4'X4' 4'X5' WHEN CONSTRAINED (WITH LONGER DIMENSION IN DIRECTION OF PEDESTRIAN CROSSING). FOR THE PURPOSED OF THIS APPLICATION, A MAX. 2.0% FINISHED SURFACE SLOPE (FOR DRAINAGE) IS CONSIDERED LEVEL.

TRUNCATED DOME DETECTABLE WARNING SURFACE

SLOPE 1.5% MAX.
(MAX. 2.0% FINISHED SURFACE SLOPE)
(NORMAL SIDEWALK CROSS SLOPE)

SLOPE 7.5% MAX.
(MAX. 8.3% FINISHED SURFACE SLOPE)
(RAMP LENGTH 15' MAX., MEASURED ALONG FINISHED SURFACE SLOPE)

COUNTER SLOPE (4% MAX)

FL FLOW LINE ELEVATION

TS TOP OF SIDEWALK/PATH ELEVATION

WING NOTES:

1. WING FLARES SHALL BE 6' LONG UNLESS OTHERWISE NOTED.
2. WING FLARES SHALL BE 10% MAX.
3. WING FLARES SHALL NOT EXCEED 15' LENGTH MEASURED ALONG CURB LINE AND SHALL BE STRAIGHT GRADED.

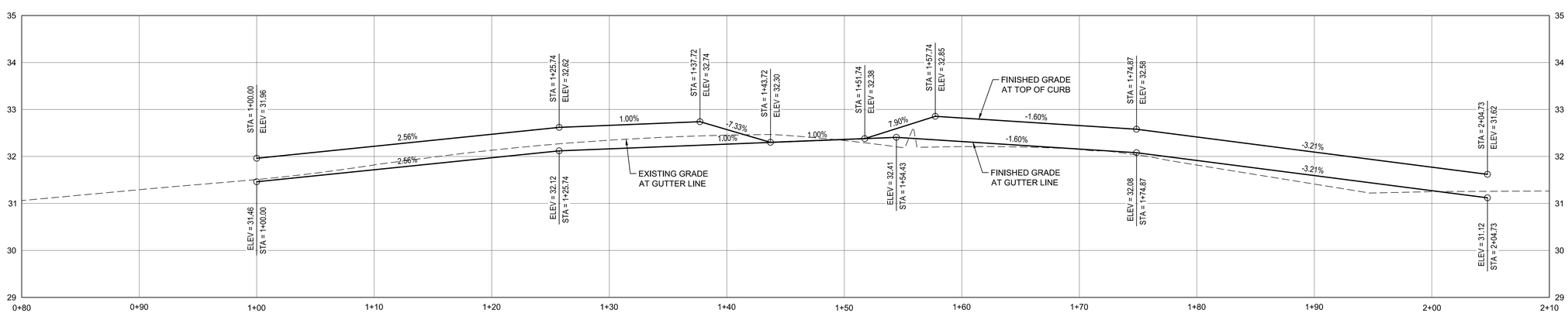

S. 1ST STREET & STREET A PROFILE (SE RETURN)

HORZ 0 5 10
VERT 0 1.25 2.5
SCALE IN FEET

City of St. Helens FOUNDED 1850

REGISTERED PROFESSIONAL ENGINEER 72,629 OREGON JUNE 11, 2008 KEITH BUISMAN
PRELIMINARY
EXPIRES: 12/31/2023

Otak
Otak, Inc.
808 SW Third Avenue, Ste. 800
Portland, OR 97204
503. 287. 6825
www.otak.com

S. 1ST AND STRAND STREETS ROAD AND UTILITY EXTENSIONS
ST. HELENS, OREGON
CURB RETURNS
S. 1ST STREET & STREET A (SE RETURN)

TITLE

#	DATE	DESCRIPTION

REVISIONS

NAVD88
DATUM

OTAK CAD KJB
DRAWN BY CHECKED BY

90% PLANS
STATUS

JANUARY 10, 2022
DATE

19823
PROJECT NUMBER

2F-4

© 2021 OTAK, INC.

If this drawing is not 22" x 34", it has been reduced/enlarged. Scale accordingly.

Plotted: Jan 10, 2022 - 6:07pm keith.buisman L:\Project\198000\19823\CADD\ACAD\Dwg\C19823CE.dwg Layout Name: 2F-4

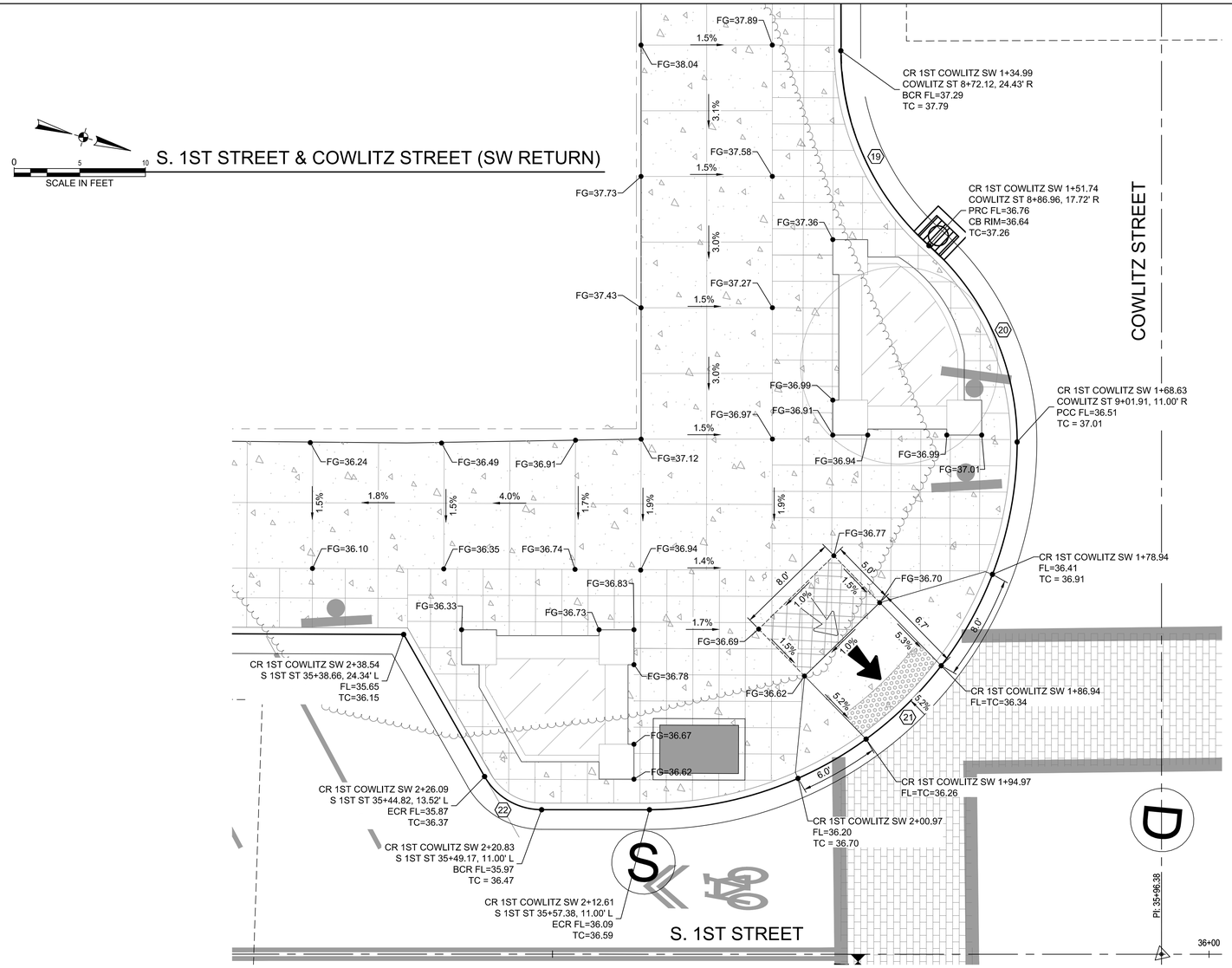

CURB RETURN CURVE DATA			
NO.	STATION & OFFSET		CURVE
19	BCR=	COWLITZ ST 8+72.70 24.42 R	D = 46°23'25" R = 20.00 T = 8.57 L = 16.19
	ECR=	8+86.96 17.72 R COWLITZ ST	
20	BCR=	COWLITZ ST 8+86.96 17.72 R	D = 48°22'37" R = 20.00 T = 8.98 L = 16.89
	ECR=	9+01.91 11.00 R COWLITZ ST	
21	BCR=	COWLITZ ST 9+01.91 11.00 R	D = 90°00'22" R = 28.00 T = 28.00 L = 43.99
	ECR=	35+57.38 11.00 L S 1ST ST	
22	BCR=	S 1ST ST 35+49.17 11.00 L	D = 60°19'34" R = 5.00 T = 2.91 L = 5.26
	ECR=	35+44.82 13.52 L S 1ST ST	

GENERAL NOTES

1. CONTRACTOR SHALL BE RESPONSIBLE FOR MEETING ALL AMERICANS WITH DISABILITIES ACT (ADA) REQUIREMENTS AS DEFINED BY THE PUBLIC RIGHTS-OF-WAY ACCESSIBILITY GUIDELINES (PROWAG).
2. DETAILS AND DIMENSIONS SHOWN ARE APPROXIMATE. SLOPES HOLD OVER ELEVATIONS. CONTRACTOR SHALL TAKE ALL NECESSARY FIELD MEASUREMENTS TO VERIFY ADA COMPLIANCE AND NOTIFY THE ENGINEER IF RAMPS CANNOT BE CONSTRUCTED AS SHOWN.
3. REFER TO ODOT STD. DWG RD 900 FOR ADA REQUIREMENTS.
4. CONTRACTOR SHALL NOTIFY ENGINEER AND CITY OF ST. HELENS 24 HOURS PRIOR TO CONCRETE POURS TO INSPECT FORMS AND VERIFY ADA STANDARDS CAN BE ACHIEVED.
5. CONTRACTOR SHALL PROTECT FRESHLY POURED CONCRETE FROM VANDALISM OR OTHER DAMAGE FOR A MINIMUM OF 24 HOURS OR UNTIL CURED ENOUGH TO SUPPORT TYPICAL USE, WHICHEVER IS LONGER. ANY CONCRETE DAMAGE WITHIN THIS TIME PERIOD SHALL BE REPAIRED AT NO COST TO THE CITY.
6. CONTRACTOR SHALL SUBMIT TRAFFIC CONTROL PLANS TO THE CITY OF ST. HELENS FOR APPROVAL PRIOR TO CONSTRUCTION. TWO WAY TRAFFIC WITH MINIMUM LANE WIDTHS OF 10 FEET MUST BE MAINTAINED FOR THE DURATION OF CONSTRUCTION.
7. CONTRACTOR SHALL SUBMIT TEMPORARY PEDESTRIAN ACCESS ROUTE PLANS TO THE CITY OF ST. HELENS FOR APPROVAL PRIOR TO CONSTRUCTION. PEDESTRIAN DETOUR ROUTES MUST BE NO LONGER THAN 1 BLOCK LENGTH. THE MAXIMUM CLOSURE TIME FOR ANY SINGLE CURB RAMP SHALL BE ONE WEEK.
8. CONTRACTOR SHALL NOTIFY ENGINEER ONCE RAMPS ARE COMPLETED FOR A POST RAMP CONSTRUCTION INSPECTION. ENGINEER SHALL PROVIDE ODOT STANDARD RAMP INSPECTION FORMS TO THE CITY OF ST. HELENS.

CURB RETURN LEGEND

TURNING SPACE MIN. LEVEL AREA 4'X4' 4'X5' WHEN CONSTRAINED (WITH LONGER DIMENSION IN DIRECTION OF PEDESTRIAN CROSSING). FOR THE PURPOSED OF THIS APPLICATION, A MAX. 2.0% FINISHED SURFACE SLOPE (FOR DRAINAGE) IS CONSIDERED LEVEL.

TRUNCATED DOME DETECTABLE WARNING SURFACE

SLOPE 1.5% MAX.
(MAX. 2.0% FINISHED SURFACE SLOPE)
(NORMAL SIDEWALK CROSS SLOPE)

SLOPE 7.5% MAX.
(MAX. 8.3% FINISHED SURFACE SLOPE)
(RAMP LENGTH 15' MAX., MEASURED ALONG FINISHED SURFACE SLOPE)

COUNTER SLOPE (4% MAX)

FL FLOW LINE ELEVATION

TS TOP OF SIDEWALK/PATH ELEVATION

WING NOTES:

1. WING FLARES SHALL BE 6' LONG UNLESS OTHERWISE NOTED.
2. WING FLARES SHALL BE 10% MAX.
3. WING FLARES SHALL NOT EXCEED 15' LENGTH MEASURED ALONG CURB LINE AND SHALL BE STRAIGHT GRADED.

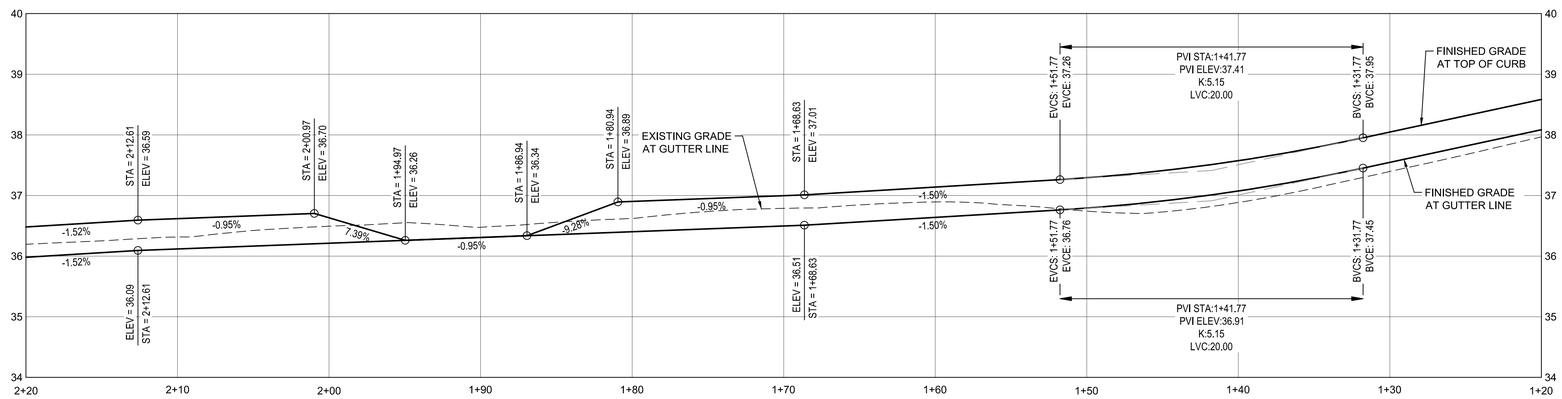

S. 1ST STREET & COWLITZ STREET PROFILE (SW RETURN)

HORZ 0 5 10
VERT 0 1.25 2.5
SCALE IN FEET

City of St. Helens FOUNDED 1850

REGISTERED PROFESSIONAL ENGINEER 72,629 OREGON JUNE 11, 2008 KEITH BUISMAN
PRELIMINARY
EXPIRES: 12/31/2023

Otak
Otak, Inc.
808 SW Third Avenue, Ste. 800
Portland, OR 97204
503. 287. 6825
www.otak.com

S. 1ST AND STRAND STREETS ROAD AND UTILITY EXTENSIONS

ST. HELENS, OREGON
CURB RETURNS

S. 1ST STREET & COWLITZ STREET (SW RETURN)

TITLE		
#	DATE	DESCRIPTION

REVISIONS

NAVD88
DATUM

OTAK CAD — KJB
DRAWN BY — CHECKED BY

90% PLANS
STATUS

JANUARY 10, 2022
DATE

19823
PROJECT NUMBER

2F-5

© 2021 OTAK, INC.

If this drawing is not 22" x 34", it has been reduced/enlarged. Scale accordingly.

Plotted: Jan 10, 2022-6:07am keith.buisman L:\Proj\c\19800\19823\CADD\ACAD\Dwgs\C19823C2E.dwg Layout Name: 2F-5

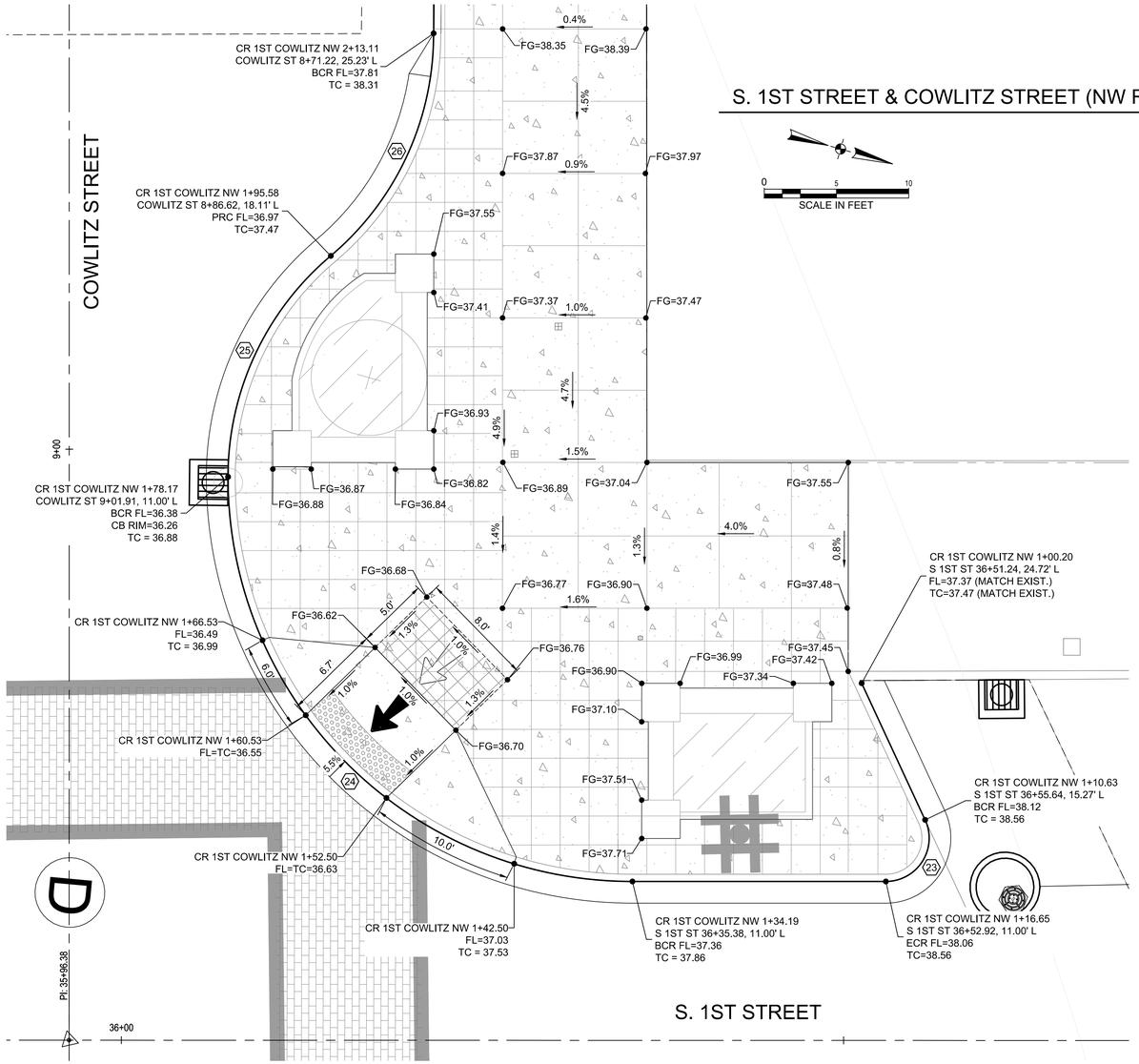

CURB RETURN CURVE DATA			
NO.	STATION & OFFSET		CURVE
23	BCR=	S 1ST ST 36+55.64 15.27 L	D = 114°56'11" R = 3.00 T = 4.70 L = 6.02
	ECR=	36+52.92 11.00 L S 1ST ST	
24	BCR=	S 1ST ST 36+35.38 11.00 L	D = 89°59'38" R = 28.00 T = 28.00 L = 43.98
	ECR=	9+01.91 11.00 L COWLITZ ST	
25	BCR=	COWLITZ ST 9+01.91 11.00 L	D = 49°53'14" R = 20.00 T = 9.30 L = 17.41
	ECR=	8+86.62 18.11 L COWLITZ ST	
26	BCR=	COWLITZ ST 8+86.62 18.11 L	D = 50°11'32" R = 20.00 T = 9.37 L = 17.52
	ECR=	8+71.22 25.23 L COWLITZ ST	

GENERAL NOTES

1. CONTRACTOR SHALL BE RESPONSIBLE FOR MEETING ALL AMERICANS WITH DISABILITIES ACT (ADA) REQUIREMENTS AS DEFINED BY THE PUBLIC RIGHTS-OF-WAY ACCESSIBILITY GUIDELINES (PROWAG).
2. DETAILS AND DIMENSIONS SHOWN ARE APPROXIMATE. SLOPES HOLD OVER ELEVATIONS. CONTRACTOR SHALL TAKE ALL NECESSARY FIELD MEASUREMENTS TO VERIFY ADA COMPLIANCE AND NOTIFY THE ENGINEER IF RAMPS CANNOT BE CONSTRUCTED AS SHOWN.
3. REFER TO ODOT STD. DWG RD 900 FOR ADA REQUIREMENTS.
4. CONTRACTOR SHALL NOTIFY ENGINEER AND CITY OF ST. HELENS 24 HOURS PRIOR TO CONCRETE POURS TO INSPECT FORMS AND VERIFY ADA STANDARDS CAN BE ACHIEVED.
5. CONTRACTOR SHALL PROTECT FRESHLY POURED CONCRETE FROM VANDALISM OR OTHER DAMAGE FOR A MINIMUM OF 24 HOURS OR UNTIL CURED ENOUGH TO SUPPORT TYPICAL USE, WHICHEVER IS LONGER. ANY CONCRETE DAMAGE WITHIN THIS TIME PERIOD SHALL BE REPAIRED AT NO COST TO THE CITY.
6. CONTRACTOR SHALL SUBMIT TRAFFIC CONTROL PLANS TO THE CITY OF ST. HELENS FOR APPROVAL PRIOR TO CONSTRUCTION. TWO WAY TRAFFIC WITH MINIMUM LANE WIDTHS OF 10 FEET MUST BE MAINTAINED FOR THE DURATION OF CONSTRUCTION.
7. CONTRACTOR SHALL SUBMIT TEMPORARY PEDESTRIAN ACCESS ROUTE PLANS TO THE CITY OF ST. HELENS FOR APPROVAL PRIOR TO CONSTRUCTION. PEDESTRIAN DETOUR ROUTES MUST BE NO LONGER THAN 1 BLOCK LENGTH. THE MAXIMUM CLOSURE TIME FOR ANY SINGLE CURB RAMP SHALL BE ONE WEEK.
8. CONTRACTOR SHALL NOTIFY ENGINEER ONCE RAMPS ARE COMPLETED FOR A POST RAMP CONSTRUCTION INSPECTION. ENGINEER SHALL PROVIDE ODOT STANDARD RAMP INSPECTION FORMS TO THE CITY OF ST. HELENS.

CURB RETURN LEGEND

TURNING SPACE MIN. LEVEL AREA 4'X4' 4'X5' WHEN CONSTRAINED (WITH LONGER DIMENSION IN DIRECTION OF PEDESTRIAN CROSSING). FOR THE PURPOSED OF THIS APPLICATION, A MAX. 2.0% FINISHED SURFACE SLOPE (FOR DRAINAGE) IS CONSIDERED LEVEL.

TRUNCATED DOME DETECTABLE WARNING SURFACE

SLOPE 1.5% MAX.
(MAX. 2.0% FINISHED SURFACE SLOPE)
(NORMAL SIDEWALK CROSS SLOPE)

SLOPE 7.5% MAX.
(MAX. 8.3% FINISHED SURFACE SLOPE)
(RAMP LENGTH 15' MAX., MEASURED ALONG FINISHED SURFACE SLOPE)

COUNTER SLOPE (4% MAX)

FL FLOW LINE ELEVATION

TS TOP OF SIDEWALK/PATH ELEVATION

WING NOTES:

1. WING FLARES SHALL BE 6' LONG UNLESS OTHERWISE NOTED.
2. WING FLARES SHALL BE 10% MAX.
3. WING FLARES SHALL NOT EXCEED 15' LENGTH MEASURED ALONG CURB LINE AND SHALL BE STRAIGHT GRADED.

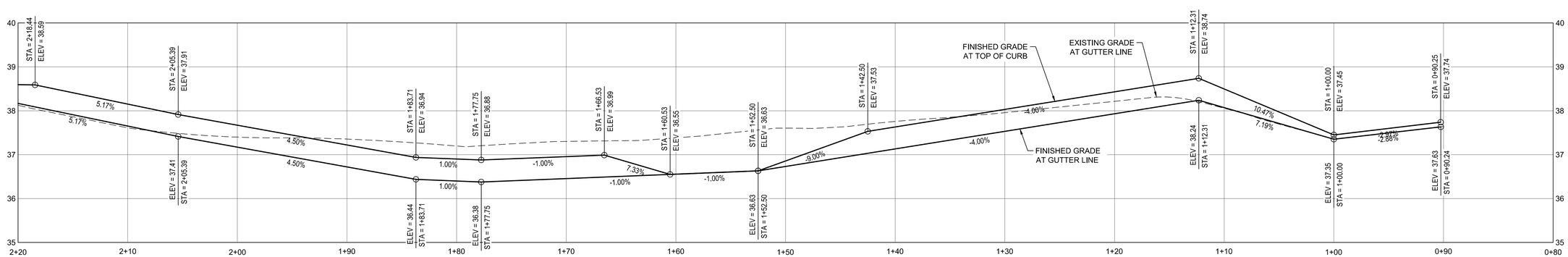

HORZ 0 5 10
VERT 0 1.25 2.5
SCALE IN FEET

S. 1ST STREET & COWLITZ STREET PROFILE (NW RETURN)

City of St. Helens FOUNDED 1850

REGISTERED PROFESSIONAL ENGINEER 72,629 OREGON JUNE 11, 2008 KEITH BUISMAN
PRELIMINARY
EXPIRES: 12/31/2023

Otak

Otak, Inc.
808 SW Third Avenue, Ste. 800
Portland, OR 97204
503. 287. 6825
www.otak.com

S. 1ST AND STRAND STREETS ROAD AND UTILITY EXTENSIONS

ST. HELENS, OREGON
CURB RETURNS

S. 1ST STREET & COWLITZ STREET (NW RETURN)

TITLE		
#	DATE	DESCRIPTION

REVISIONS

NAVD88
DATUM

OTAK CAD — KJB
DRAWN BY — CHECKED BY

90% PLANS
STATUS

JANUARY 10, 2022
DATE

19823
PROJECT NUMBER

2F-6

© 2021 OTAK, INC.

If this drawing is not 22" x 34", it has been reduced/enlarged. Scale accordingly.

Plotted: Jan 10, 2022 - 6:08pm keith.buisman L:\Project\19800\19823\CAD\ACAD\Dwg\C19823CE.dwg Layout Name: 2F-6

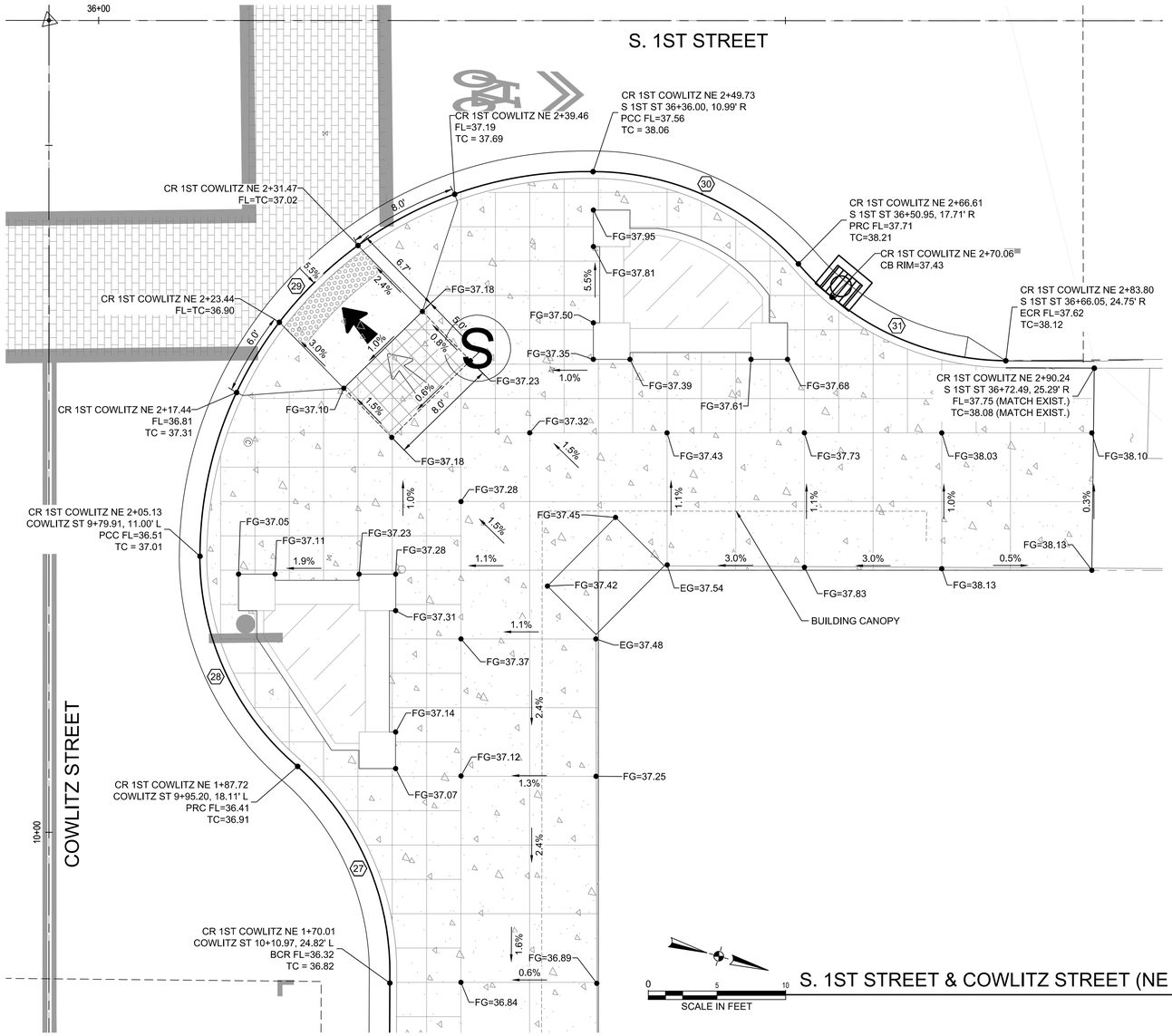

S. 1ST STREET & COWLITZ STREET (NE RETURN)

SCALE IN FEET

CURB RETURN CURVE DATA			
NO.	STATION & OFFSET		CURVE
27	BCR=	COWLITZ ST 10+10.97 24.83 L	D = 50°44'52" R = 20.00 T = 9.49 L = 17.71
	ECR=	9+95.20 18.11 L COWLITZ ST	
28	BCR=	COWLITZ ST 9+95.20 18.11 L	D = 49°53'14" R = 20.00 T = 9.30 L = 17.41
	ECR=	9+79.91 11.00 L COWLITZ ST	
29	BCR=	COWLITZ ST 9+79.91 11.00 L	D = 89°59'38" R = 28.00 T = 28.00 L = 43.98
	ECR=	36+36.00 10.99 R S 1ST ST	
30	BCR=	S 1ST ST 36+36.00 11.00 R	D = 50°08'54" R = 20.00 T = 9.36 L = 17.51
	ECR=	36+50.95 17.71 R S 1ST ST	
31	BCR=	S 1ST ST 36+50.95 17.71 R	D = 49°14'21" R = 20.00 T = 9.16 L = 17.19
	ECR=	36+66.05 24.75 R S 1ST ST	

GENERAL NOTES

1. CONTRACTOR SHALL BE RESPONSIBLE FOR MEETING ALL AMERICANS WITH DISABILITIES ACT (ADA) REQUIREMENTS AS DEFINED BY THE PUBLIC RIGHTS-OF-WAY ACCESSIBILITY GUIDELINES (PROWAG).
2. DETAILS AND DIMENSIONS SHOWN ARE APPROXIMATE. SLOPES HOLD OVER ELEVATIONS. CONTRACTOR SHALL TAKE ALL NECESSARY FIELD MEASUREMENTS TO VERIFY ADA COMPLIANCE AND NOTIFY THE ENGINEER IF RAMPS CANNOT BE CONSTRUCTED AS SHOWN.
3. REFER TO ODOT STD. DWG RD 900 FOR ADA REQUIREMENTS.
4. CONTRACTOR SHALL NOTIFY ENGINEER AND CITY OF ST. HELENS 24 HOURS PRIOR TO CONCRETE POURS TO INSPECT FORMS AND VERIFY ADA STANDARDS CAN BE ACHIEVED.
5. CONTRACTOR SHALL PROTECT FRESHLY POURED CONCRETE FROM VANDALISM OR OTHER DAMAGE FOR A MINIMUM OF 24 HOURS OR UNTIL CURED ENOUGH TO SUPPORT TYPICAL USE, WHICHEVER IS LONGER. ANY CONCRETE DAMAGE WITHIN THIS TIME PERIOD SHALL BE REPAIRED AT NO COST TO THE CITY.
6. CONTRACTOR SHALL SUBMIT TRAFFIC CONTROL PLANS TO THE CITY OF ST. HELENS FOR APPROVAL PRIOR TO CONSTRUCTION. TWO WAY TRAFFIC WITH MINIMUM LANE WIDTHS OF 10 FEET MUST BE MAINTAINED FOR THE DURATION OF CONSTRUCTION.
7. CONTRACTOR SHALL SUBMIT TEMPORARY PEDESTRIAN ACCESS ROUTE PLANS TO THE CITY OF ST. HELENS FOR APPROVAL PRIOR TO CONSTRUCTION. PEDESTRIAN DETOUR ROUTES MUST BE NO LONGER THAN 1 BLOCK LENGTH. THE MAXIMUM CLOSURE TIME FOR ANY SINGLE CURB RAMP SHALL BE ONE WEEK.
8. CONTRACTOR SHALL NOTIFY ENGINEER ONCE RAMPS ARE COMPLETED FOR A POST RAMP CONSTRUCTION INSPECTION. ENGINEER SHALL PROVIDE ODOT STANDARD RAMP INSPECTION FORMS TO THE CITY OF ST. HELENS.

CURB RETURN LEGEND

TURNING SPACE MIN. LEVEL AREA 4'X4' 4'X5' WHEN CONSTRAINED (WITH LONGER DIMENSION IN DIRECTION OF PEDESTRIAN CROSSING). FOR THE PURPOSED OF THIS APPLICATION, A MAX. 2.0% FINISHED SURFACE SLOPE (FOR DRAINAGE) IS CONSIDERED LEVEL.

TRUNCATED DOME DETECTABLE WARNING SURFACE

SLOPE 1.5% MAX.
(MAX. 2.0% FINISHED SURFACE SLOPE)
(NORMAL SIDEWALK CROSS SLOPE)

SLOPE 7.5% MAX.
(MAX. 8.3% FINISHED SURFACE SLOPE)
(RAMP LENGTH 15' MAX., MEASURED ALONG FINISHED SURFACE SLOPE)

COUNTER SLOPE (4% MAX)

FL FLOW LINE ELEVATION

TS TOP OF SIDEWALK/PATH ELEVATION

WING NOTES:

1. WING FLARES SHALL BE 6' LONG UNLESS OTHERWISE NOTED.
2. WING FLARES SHALL BE 10% MAX.
3. WING FLARES SHALL NOT EXCEED 15' LENGTH MEASURED ALONG CURB LINE AND SHALL BE STRAIGHT GRADED.

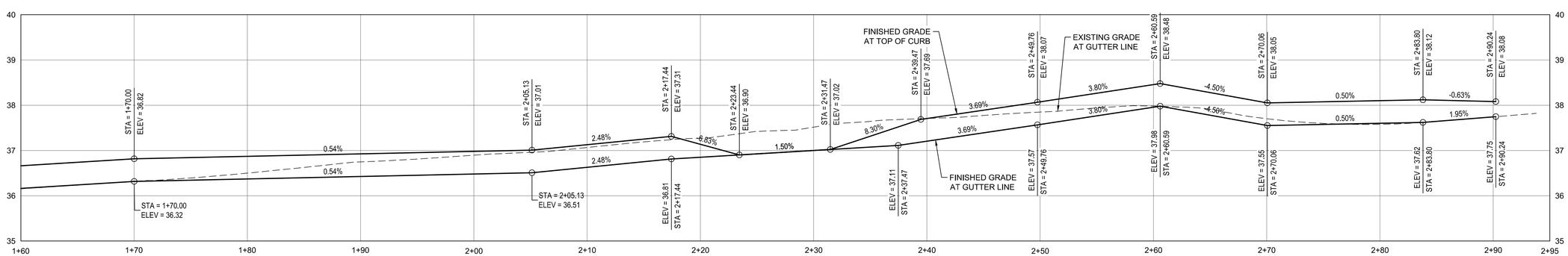

S. 1ST STREET & COWLITZ STREET PROFILE (NE RETURN)

HORZ 0 5 10
VERT 0 1.25 2.5
SCALE IN FEET

City of St. Helens FOUNDED 1850

REGISTERED PROFESSIONAL ENGINEER 72,629 OREGON JUNE 11, 2008 KEITH BUISMAN
PRELIMINARY
EXPIRES: 12/31/2023

Otak
Otak, Inc.
808 SW Third Avenue, Ste. 800
Portland, OR 97204
503. 287. 6825
www.otak.com

S. 1ST AND STRAND STREETS ROAD AND UTILITY EXTENSIONS
ST. HELENS, OREGON
CURB RETURNS

S. 1ST STREET & COWLITZ STREET (NE RETURN)

TITLE

#	DATE	DESCRIPTION

REVISIONS

NAVD88
DATUM

OTAK CAD KJB
DRAWN BY CHECKED BY

90% PLANS
STATUS

JANUARY 10, 2022
DATE

19823
PROJECT NUMBER

2F-7

© 2021 OTAK, INC.

If this drawing is not 22" x 34", it has been reduced/enlarged. Scale accordingly.

Plotted: Jan 10, 2022 - 5:09pm keith.buisman L:\Project\19800\19823\CADD\ACAD\Dwg\C19823CE.dwg Layout Name: 2F-7

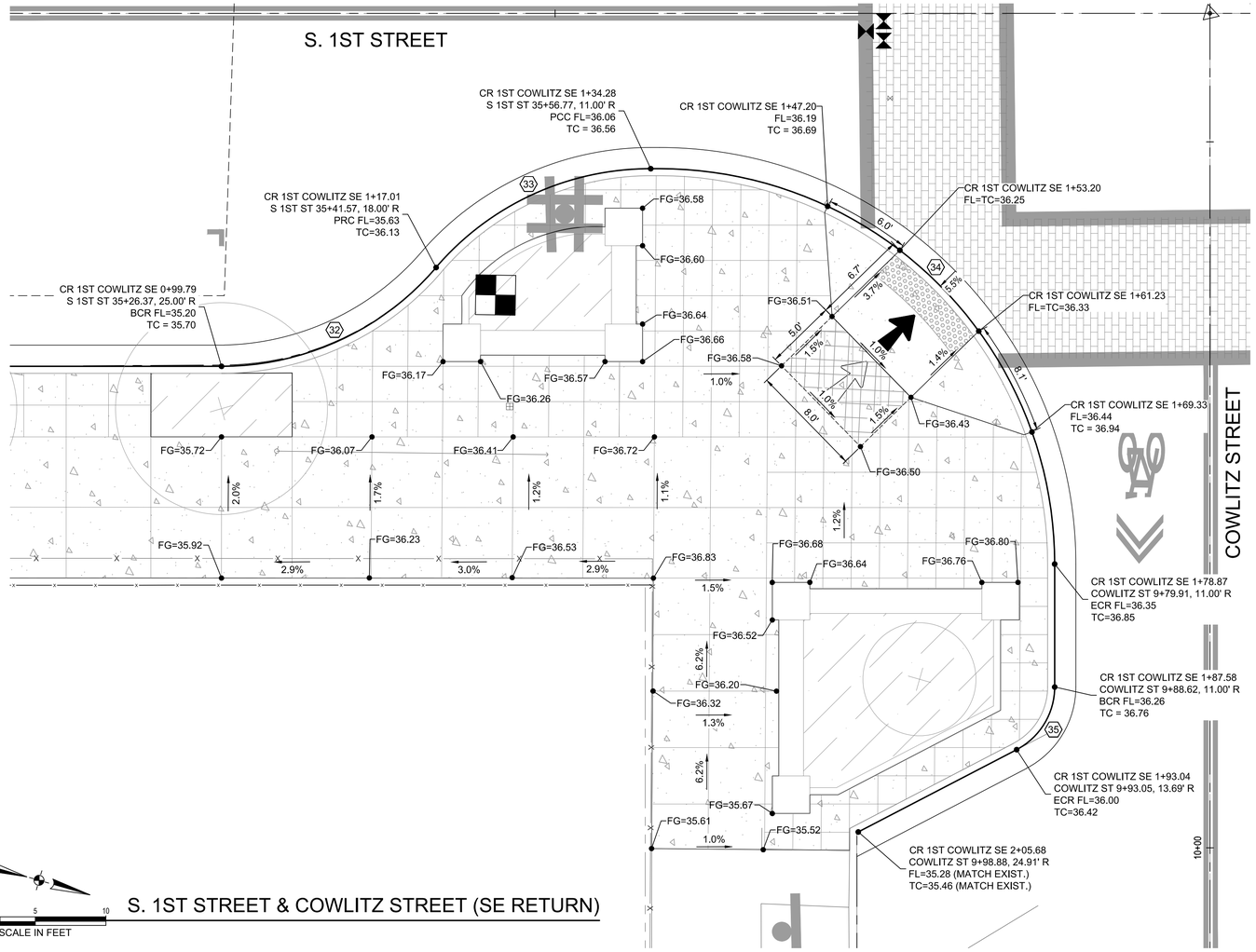

CURB RETURN CURVE DATA

NO.	STATION & OFFSET	CURVE
32	BCR= S 1ST ST 35+26.37 25.00 R ECR= 35+41.57 18.00 R S 1ST ST	D = 49°27'20" R = 20.00 T = 9.21 L = 17.26
33	BCR= S 1ST ST 35+41.57 18.00 R ECR= 35+56.77 11.00 R S 1ST ST	D = 49°27'20" R = 20.00 T = 9.21 L = 17.26
34	BCR= S 1ST ST 35+56.77 11.00 R ECR= 9+79.91 11.00 R COWLITZ ST	D = 91°15'53" R = 28.00 T = 28.63 L = 44.60
35	BCR= COWLITZ ST 9+88.62 11.00 R ECR= 9+93.05 13.69 R COWLITZ ST	D = 62°31'53" R = 5.00 T = 3.04 L = 5.46

GENERAL NOTES

1. CONTRACTOR SHALL BE RESPONSIBLE FOR MEETING ALL AMERICANS WITH DISABILITIES ACT (ADA) REQUIREMENTS AS DEFINED BY THE PUBLIC RIGHTS-OF-WAY ACCESSIBILITY GUIDELINES (PROWAG).
2. DETAILS AND DIMENSIONS SHOWN ARE APPROXIMATE. SLOPES HOLD OVER ELEVATIONS. CONTRACTOR SHALL TAKE ALL NECESSARY FIELD MEASUREMENTS TO VERIFY ADA COMPLIANCE AND NOTIFY THE ENGINEER IF RAMPS CANNOT BE CONSTRUCTED AS SHOWN.
3. REFER TO ODOT STD. DWG RD 900 FOR ADA REQUIREMENTS.
4. CONTRACTOR SHALL NOTIFY ENGINEER AND CITY OF ST. HELENS 24 HOURS PRIOR TO CONCRETE POURS TO INSPECT FORMS AND VERIFY ADA STANDARDS CAN BE ACHIEVED.
5. CONTRACTOR SHALL PROTECT FRESHLY POURED CONCRETE FROM VANDALISM OR OTHER DAMAGE FOR A MINIMUM OF 24 HOURS OR UNTIL CURED ENOUGH TO SUPPORT TYPICAL USE, WHICHEVER IS LONGER. ANY CONCRETE DAMAGE WITHIN THIS TIME PERIOD SHALL BE REPAIRED AT NO COST TO THE CITY.
6. CONTRACTOR SHALL SUBMIT TRAFFIC CONTROL PLANS TO THE CITY OF ST. HELENS FOR APPROVAL PRIOR TO CONSTRUCTION. TWO WAY TRAFFIC WITH MINIMUM LANE WIDTHS OF 10 FEET MUST BE MAINTAINED FOR THE DURATION OF CONSTRUCTION.
7. CONTRACTOR SHALL SUBMIT TEMPORARY PEDESTRIAN ACCESS ROUTE PLANS TO THE CITY OF ST. HELENS FOR APPROVAL PRIOR TO CONSTRUCTION. PEDESTRIAN DETOUR ROUTES MUST BE NO LONGER THAN 1 BLOCK LENGTH. THE MAXIMUM CLOSURE TIME FOR ANY SINGLE CURB RAMP SHALL BE ONE WEEK.
8. CONTRACTOR SHALL NOTIFY ENGINEER ONCE RAMPS ARE COMPLETED FOR A POST RAMP CONSTRUCTION INSPECTION. ENGINEER SHALL PROVIDE ODOT STANDARD RAMP INSPECTION FORMS TO THE CITY OF ST. HELENS.

CURB RETURN LEGEND

TURNING SPACE MIN. LEVEL AREA 4'X4' 4'X5' WHEN CONSTRAINED (WITH LONGER DIMENSION IN DIRECTION OF PEDESTRIAN CROSSING). FOR THE PURPOSED OF THIS APPLICATION, A MAX. 2.0% FINISHED SURFACE SLOPE (FOR DRAINAGE) IS CONSIDERED LEVEL.

TRUNCATED DOME DETECTABLE WARNING SURFACE

SLOPE 1.5% MAX.
(MAX. 2.0% FINISHED SURFACE SLOPE)
(NORMAL SIDEWALK CROSS SLOPE)

SLOPE 7.5% MAX.
(MAX. 8.3% FINISHED SURFACE SLOPE)
(RAMP LENGTH 15' MAX., MEASURED ALONG FINISHED SURFACE SLOPE)

COUNTER SLOPE (4% MAX)

FL FLOW LINE ELEVATION

TS TOP OF SIDEWALK/PATH ELEVATION

WING NOTES:

1. WING FLARES SHALL BE 6' LONG UNLESS OTHERWISE NOTED.
2. WING FLARES SHALL BE 10% MAX.
3. WING FLARES SHALL NOT EXCEED 15' LENGTH MEASURED ALONG CURB LINE AND SHALL BE STRAIGHT GRADED.

0 5 10
SCALE IN FEET

S. 1ST STREET & COWLITZ STREET (SE RETURN)

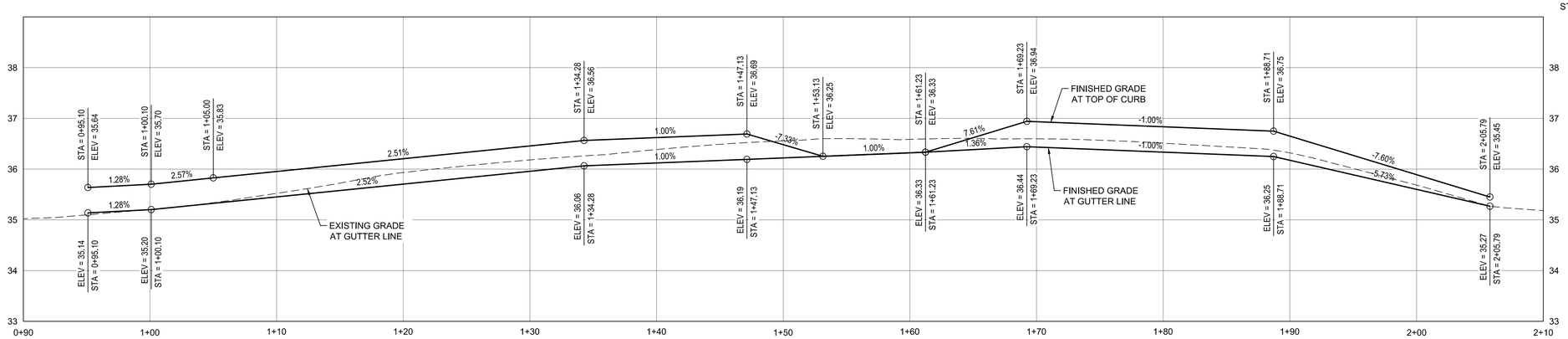

HORZ 0 5 10
VERT 0 1.25 2.5
SCALE IN FEET

S. 1ST STREET & COWLITZ STREET PROFILE (SE RETURN)

City of St. Helens FOUNDED 1850

REGISTERED PROFESSIONAL ENGINEER 72,629 OREGON JUNE 11, 2008 KEITH BUISMAN
PRELIMINARY
EXPIRES: 12/31/2023

Otak

Otak, Inc.
808 SW Third Avenue, Ste. 800
Portland, OR 97204
503. 287. 6825
www.otak.com

S. 1ST AND STRAND STREETS ROAD AND UTILITY EXTENSIONS

ST. HELENS, OREGON
CURB RETURNS

S. 1ST STREET & COWLITZ STREET (SE RETURN)

TITLE

#	DATE	DESCRIPTION

REVISIONS

NAVD88
DATUM

OTAK CAD KJB
DRAWN BY CHECKED BY

90% PLANS
STATUS

JANUARY 10, 2022
DATE

19823
PROJECT NUMBER

2F-8

© 2021 OTAK, INC.

If this drawing is not 22" x 34", it has been reduced/enlarged. Scale accordingly.

Plotted: Jan 10, 2022 - 6:09pm keith.buisman L:\Project\19800\19823\CADD\ACAD\Dwgs\C19823CE.dwg Layout Name: 2F-8

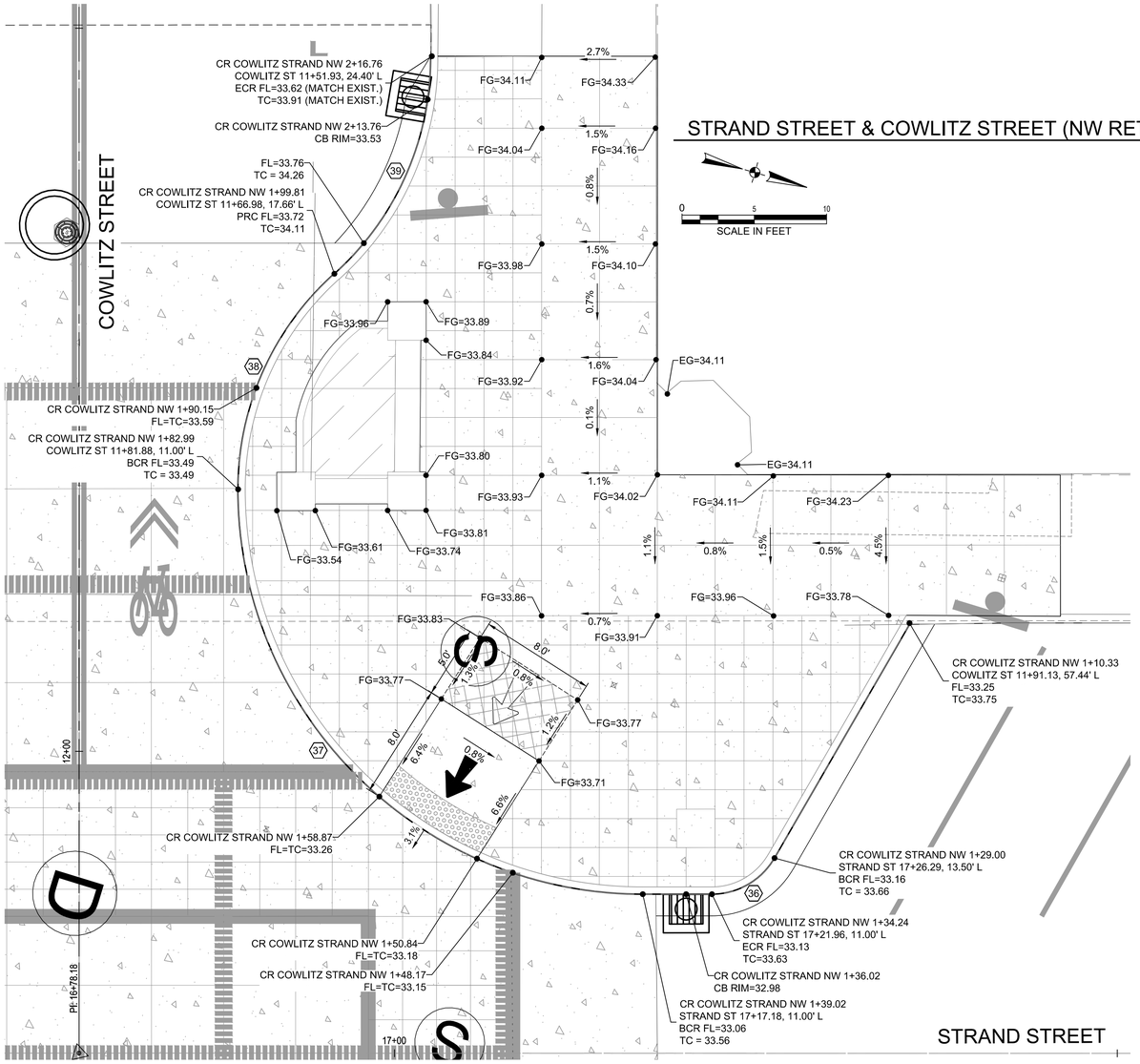

CURB RETURN CURVE DATA		
NO.	STATION & OFFSET	CURVE
36	BCR= STRAND ST 17+26.29 13.50 L ECR= 17+21.96 11.00 L STRAND ST	D = 59°58'55" R = 5.00 T = 2.89 L = 5.23
37	BCR= STRAND ST 17+17.18 11.00 L ECR= 11+81.88 11.00 L COWLITZ ST	D = 89°58'36" R = 28.00 T = 27.99 L = 43.97
38	BCR= COWLITZ ST 11+81.88 11.00 L ECR= 11+66.98 17.66 L COWLITZ ST	D = 48°09'52" R = 20.00 T = 8.94 L = 16.81
39	BCR= COWLITZ ST 11+66.98 17.66 L ECR= 11+51.93 24.31 L COWLITZ ST	D = 48°34'10" R = 20.00 T = 9.02 L = 16.95

GENERAL NOTES

1. CONTRACTOR SHALL BE RESPONSIBLE FOR MEETING ALL AMERICANS WITH DISABILITIES ACT (ADA) REQUIREMENTS AS DEFINED BY THE PUBLIC RIGHTS-OF-WAY ACCESSIBILITY GUIDELINES (PROWAG).
2. DETAILS AND DIMENSIONS SHOWN ARE APPROXIMATE. SLOPES HOLD OVER ELEVATIONS. CONTRACTOR SHALL TAKE ALL NECESSARY FIELD MEASUREMENTS TO VERIFY ADA COMPLIANCE AND NOTIFY THE ENGINEER IF RAMPS CANNOT BE CONSTRUCTED AS SHOWN.
3. REFER TO ODOT STD. DWG RD 900 FOR ADA REQUIREMENTS.
4. CONTRACTOR SHALL NOTIFY ENGINEER AND CITY OF ST. HELENS 24 HOURS PRIOR TO CONCRETE POURS TO INSPECT FORMS AND VERIFY ADA STANDARDS CAN BE ACHIEVED.
5. CONTRACTOR SHALL PROTECT FRESHLY POURED CONCRETE FROM VANDALISM OR OTHER DAMAGE FOR A MINIMUM OF 24 HOURS OR UNTIL CURED ENOUGH TO SUPPORT TYPICAL USE, WHICHEVER IS LONGER. ANY CONCRETE DAMAGE WITHIN THIS TIME PERIOD SHALL BE REPAIRED AT NO COST TO THE CITY.
6. CONTRACTOR SHALL SUBMIT TRAFFIC CONTROL PLANS TO THE CITY OF ST. HELENS FOR APPROVAL PRIOR TO CONSTRUCTION. TWO WAY TRAFFIC WITH MINIMUM LANE WIDTHS OF 10 FEET MUST BE MAINTAINED FOR THE DURATION OF CONSTRUCTION.
7. CONTRACTOR SHALL SUBMIT TEMPORARY PEDESTRIAN ACCESS ROUTE PLANS TO THE CITY OF ST. HELENS FOR APPROVAL PRIOR TO CONSTRUCTION. PEDESTRIAN DETOUR ROUTES MUST BE NO LONGER THAN 1 BLOCK LENGTH. THE MAXIMUM CLOSURE TIME FOR ANY SINGLE CURB RAMP SHALL BE ONE WEEK.
8. CONTRACTOR SHALL NOTIFY ENGINEER ONCE RAMPS ARE COMPLETED FOR A POST RAMP CONSTRUCTION INSPECTION. ENGINEER SHALL PROVIDE ODOT STANDARD RAMP INSPECTION FORMS TO THE CITY OF ST. HELENS.

CURB RETURN LEGEND

TURNING SPACE MIN. LEVEL AREA 4'X4' 4'X5' WHEN CONSTRAINED (WITH LONGER DIMENSION IN DIRECTION OF PEDESTRIAN CROSSING). FOR THE PURPOSED OF THIS APPLICATION, A MAX. 2.0% FINISHED SURFACE SLOPE (FOR DRAINAGE) IS CONSIDERED LEVEL.

TRUNCATED DOME DETECTABLE WARNING SURFACE

SLOPE 1.5% MAX.
(MAX. 2.0% FINISHED SURFACE SLOPE)
(NORMAL SIDEWALK CROSS SLOPE)

SLOPE 7.5% MAX.
(MAX. 8.3% FINISHED SURFACE SLOPE)
(RAMP LENGTH 15' MAX., MEASURED ALONG FINISHED SURFACE SLOPE)

COUNTER SLOPE (4% MAX)

FL FLOW LINE ELEVATION

TS TOP OF SIDEWALK/PATH ELEVATION

WING NOTES:

1. WING FLARES SHALL BE 6' LONG UNLESS OTHERWISE NOTED.
2. WING FLARES SHALL BE 10% MAX.
3. WING FLARES SHALL NOT EXCEED 15' LENGTH MEASURED ALONG CURB LINE AND SHALL BE STRAIGHT GRADED.

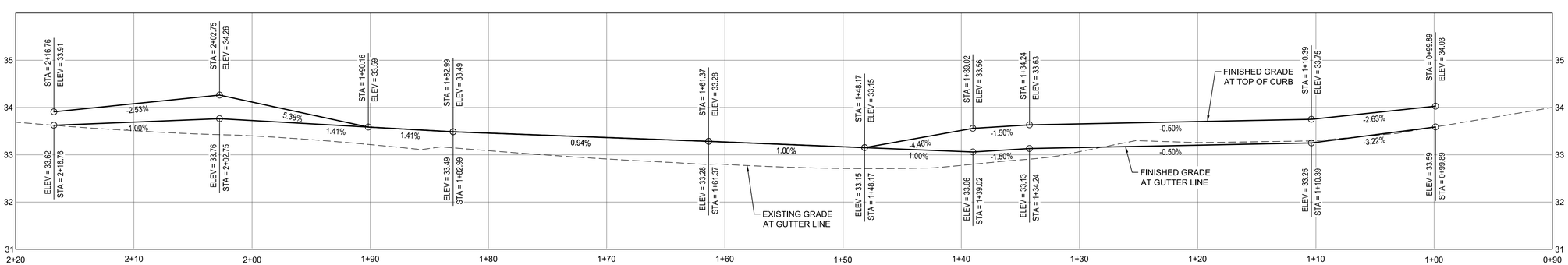

HORZ 0 5 10
VERT 0 1.25 2.5
SCALE IN FEET

STRAND STREET & COWLITZ STREET PROFILE (NW RETURN)

City of St. Helens FOUNDED 1850

REGISTERED PROFESSIONAL ENGINEER 72,629 OREGON JUNE 11, 2008 KEITH BUISMAN
PRELIMINARY
EXPIRES: 12/31/2023

Otak
Otak, Inc.
808 SW Third Avenue, Ste. 800
Portland, OR 97204
503. 287. 6825
www.otak.com

S. 1ST AND STRAND STREETS ROAD AND UTILITY EXTENSIONS

ST. HELENS, OREGON
CURB RETURNS

STRAND STREET & COWLITZ STREET (NW RETURN)

TITLE

#	DATE	DESCRIPTION

REVISIONS

NAVD88
DATUM

OTAK CAD — KJB
DRAWN BY — CHECKED BY

90% PLANS
STATUS

JANUARY 10, 2022
DATE

19823
PROJECT NUMBER

2F-9

© 2021 OTAK, INC.

If this drawing is not 22" x 34", it has been reduced/enlarged. Scale accordingly.

Plotted: Jan 10, 2022 - 6:10pm keith.buisman L:\Project\19800\19823\CADD\ACAD\Dwgs\C19823CF.dwg Layout Name: 2F-9

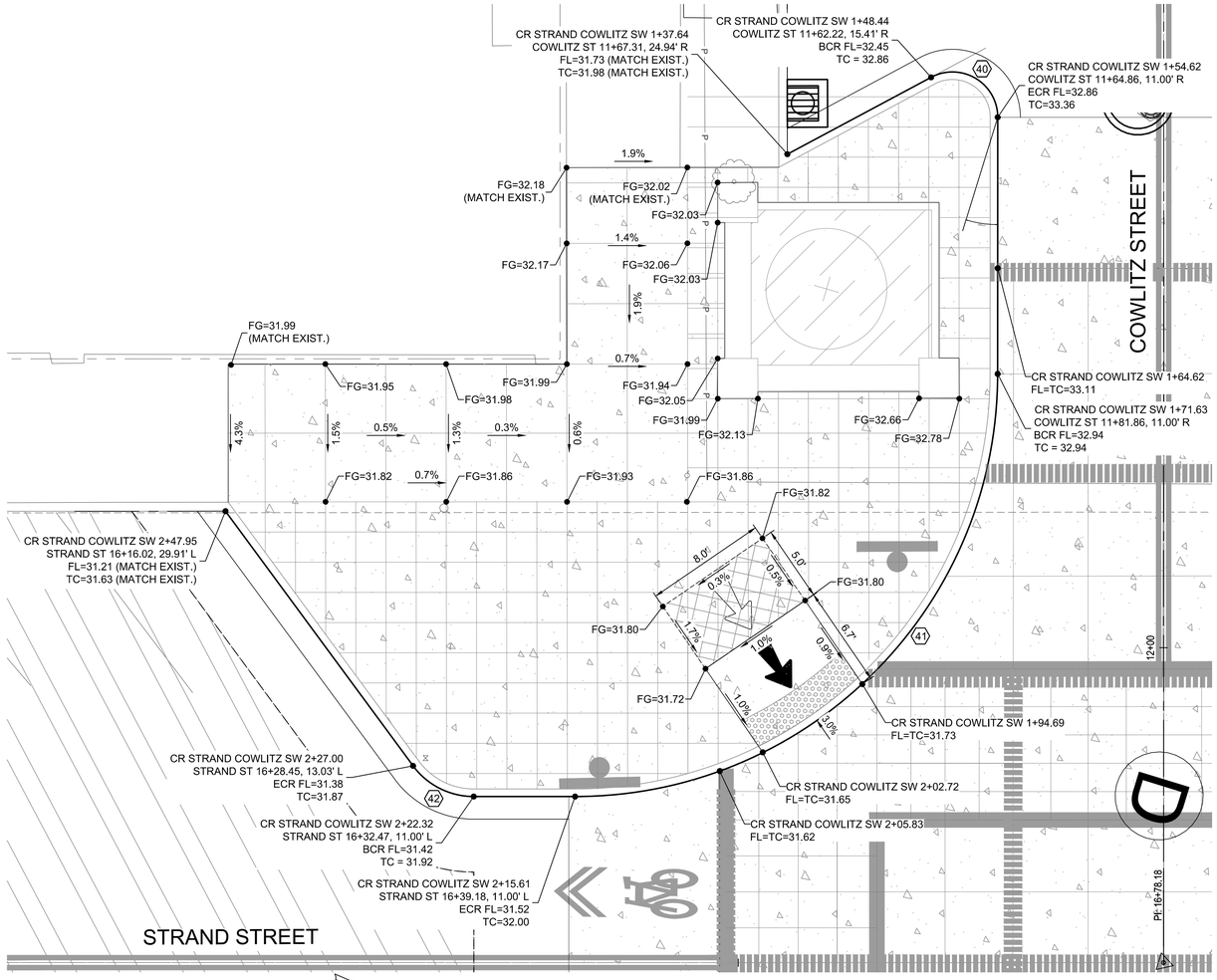

STRAND STREET & COWLITZ STREET (SW RETURN)

0 5 10
SCALE IN FEET

CURB RETURN CURVE DATA			
NO.	STATION & OFFSET		CURVE
40	BCR=	COWLITZ ST 11+62.22 15.41 R	D = 118°07'30" R = 3.00 T = 5.01 L = 6.19
	ECR=	11+64.86 11.00 R COWLITZ ST	
41	BCR=	COWLITZ ST 11+81.87 11.00 R	D = 90°00'14" R = 28.00 T = 28.00 L = 43.98
	ECR=	16+39.18 11.00 L STRAND ST	
42	BCR=	STRAND ST 16+32.47 11.00 L	D = 53°36'56" R = 5.00 T = 2.53 L = 4.68
	ECR=	16+28.45 13.03 L STRAND ST	

GENERAL NOTES

1. CONTRACTOR SHALL BE RESPONSIBLE FOR MEETING ALL AMERICANS WITH DISABILITIES ACT (ADA) REQUIREMENTS AS DEFINED BY THE PUBLIC RIGHTS-OF-WAY ACCESSIBILITY GUIDELINES (PROWAG).
2. DETAILS AND DIMENSIONS SHOWN ARE APPROXIMATE. SLOPES HOLD OVER ELEVATIONS. CONTRACTOR SHALL TAKE ALL NECESSARY FIELD MEASUREMENTS TO VERIFY ADA COMPLIANCE AND NOTIFY THE ENGINEER IF RAMPS CANNOT BE CONSTRUCTED AS SHOWN.
3. REFER TO ODOT STD. DWG RD 900 FOR ADA REQUIREMENTS.
4. CONTRACTOR SHALL NOTIFY ENGINEER AND CITY OF ST. HELENS 24 HOURS PRIOR TO CONCRETE POURS TO INSPECT FORMS AND VERIFY ADA STANDARDS CAN BE ACHIEVED.
5. CONTRACTOR SHALL PROTECT FRESHLY POURED CONCRETE FROM VANDALISM OR OTHER DAMAGE FOR A MINIMUM OF 24 HOURS OR UNTIL CURED ENOUGH TO SUPPORT TYPICAL USE, WHICHEVER IS LONGER. ANY CONCRETE DAMAGE WITHIN THIS TIME PERIOD SHALL BE REPAIRED AT NO COST TO THE CITY.
6. CONTRACTOR SHALL SUBMIT TRAFFIC CONTROL PLANS TO THE CITY OF ST. HELENS FOR APPROVAL PRIOR TO CONSTRUCTION. TWO WAY TRAFFIC WITH MINIMUM LANE WIDTHS OF 10 FEET MUST BE MAINTAINED FOR THE DURATION OF CONSTRUCTION.
7. CONTRACTOR SHALL SUBMIT TEMPORARY PEDESTRIAN ACCESS ROUTE PLANS TO THE CITY OF ST. HELENS FOR APPROVAL PRIOR TO CONSTRUCTION. PEDESTRIAN DETOUR ROUTES MUST BE NO LONGER THAN 1 BLOCK LENGTH. THE MAXIMUM CLOSURE TIME FOR ANY SINGLE CURB RAMP SHALL BE ONE WEEK.
8. CONTRACTOR SHALL NOTIFY ENGINEER ONCE RAMPS ARE COMPLETED FOR A POST RAMP CONSTRUCTION INSPECTION. ENGINEER SHALL PROVIDE ODOT STANDARD RAMP INSPECTION FORMS TO THE CITY OF ST. HELENS.

CURB RETURN LEGEND

TURNING SPACE MIN. LEVEL AREA 4'X4' 4'X5' WHEN CONSTRAINED (WITH LONGER DIMENSION IN DIRECTION OF PEDESTRIAN CROSSING). FOR THE PURPOSED OF THIS APPLICATION, A MAX. 2.0% FINISHED SURFACE SLOPE (FOR DRAINAGE) IS CONSIDERED LEVEL.

TRUNCATED DOME DETECTABLE WARNING SURFACE

SLOPE 1.5% MAX.
(MAX. 2.0% FINISHED SURFACE SLOPE)
(NORMAL SIDEWALK CROSS SLOPE)

SLOPE 7.5% MAX.
(MAX. 8.3% FINISHED SURFACE SLOPE)
(RAMP LENGTH 15' MAX., MEASURED ALONG FINISHED SURFACE SLOPE)

COUNTER SLOPE (4% MAX)

FL FLOW LINE ELEVATION

TS TOP OF SIDEWALK/PATH ELEVATION

WING NOTES:

1. WING FLARES SHALL BE 6' LONG UNLESS OTHERWISE NOTED.
2. WING FLARES SHALL BE 10% MAX.
3. WING FLARES SHALL NOT EXCEED 15' LENGTH MEASURED ALONG CURB LINE AND SHALL BE STRAIGHT GRADED.

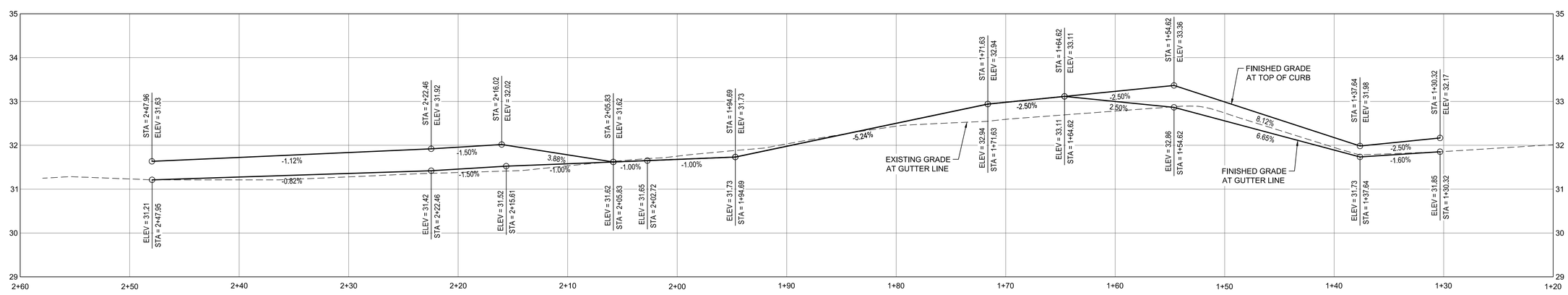

STRAND STREET & COWLITZ STREET PROFILE (SW RETURN)

HORZ 0 5 10
VERT 0 1.25 2.5
SCALE IN FEET

City of St. Helens FOUNDED 1850

REGISTERED PROFESSIONAL ENGINEER 72,629 OREGON JUNE 11, 2008 KEITH BUISMAN
PRELIMINARY
EXPIRES: 12/31/2023

Otak
Otak, Inc.
808 SW Third Avenue, Ste. 800
Portland, OR 97204
503. 287. 6825
www.otak.com

S. 1ST AND STRAND STREETS ROAD AND UTILITY EXTENSIONS

ST. HELENS, OREGON
CURB RETURNS

STRAND STREET & COWLITZ STREET (SW RETURN)

TITLE		
#	DATE	DESCRIPTION

REVISIONS

NAVD88
DATUM

OTAK CAD — KJB
DRAWN BY — CHECKED BY

90% PLANS
STATUS

JANUARY 10, 2022
DATE

19823
PROJECT NUMBER

2F-10

© 2021 OTAK, INC.

If this drawing is not 22" x 34", it has been reduced/enlarged. Scale accordingly.

Plotted: Jan 10, 2022 - 5:11am, keith.buisman L:\Project\19800\19823\CAD\ACAD\Dwg\C19823C2F.dwg Layout Name: 2F-10

STRAND STREET & STREET A (SW RETURN)

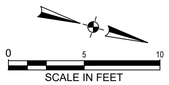

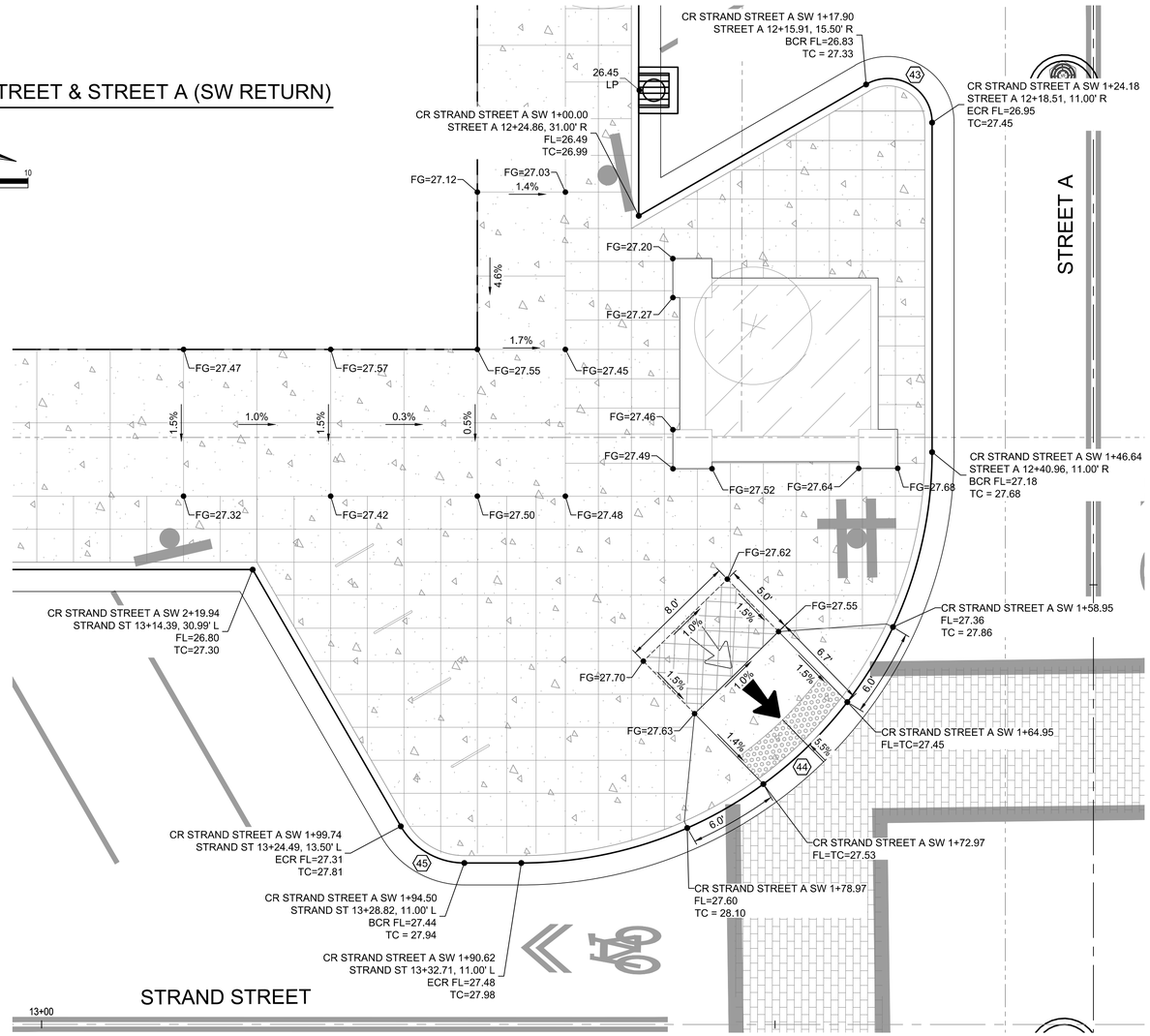

CURB RETURN CURVE DATA		
NO.	STATION & OFFSET	CURVE
43	BCR= STREET A 12+15.91 15.50 R . . . ECR= 12+18.51 11.00 R STREET A	D = 120°00'00" R = 3.00 T = 5.20 L = 6.28
44	BCR= STREET A 12+40.96 11.00 R . . . ECR= 13+32.71 11.00 L STRAND ST	D = 90°00'00" R = 28.00 T = 28.00 L = 43.98
45	BCR= STRAND ST 13+28.82 11.00 L . . . ECR= 13+24.49 13.50 L STRAND ST	D = 60°00'00" R = 5.00 T = 2.89 L = 5.24

GENERAL NOTES

1. CONTRACTOR SHALL BE RESPONSIBLE FOR MEETING ALL AMERICANS WITH DISABILITIES ACT (ADA) REQUIREMENTS AS DEFINED BY THE PUBLIC RIGHTS-OF-WAY ACCESSIBILITY GUIDELINES (PROWAG).
2. DETAILS AND DIMENSIONS SHOWN ARE APPROXIMATE. SLOPES HOLD OVER ELEVATIONS. CONTRACTOR SHALL TAKE ALL NECESSARY FIELD MEASUREMENTS TO VERIFY ADA COMPLIANCE AND NOTIFY THE ENGINEER IF RAMPS CANNOT BE CONSTRUCTED AS SHOWN.
3. REFER TO ODOT STD. DWG RD 900 FOR ADA REQUIREMENTS.
4. CONTRACTOR SHALL NOTIFY ENGINEER AND CITY OF ST. HELENS 24 HOURS PRIOR TO CONCRETE POURS TO INSPECT FORMS AND VERIFY ADA STANDARDS CAN BE ACHIEVED.
5. CONTRACTOR SHALL PROTECT FRESHLY POURED CONCRETE FROM VANDALISM OR OTHER DAMAGE FOR A MINIMUM OF 24 HOURS OR UNTIL CURED ENOUGH TO SUPPORT TYPICAL USE, WHICHEVER IS LONGER. ANY CONCRETE DAMAGE WITHIN THIS TIME PERIOD SHALL BE REPAIRED AT NO COST TO THE CITY.
6. CONTRACTOR SHALL SUBMIT TRAFFIC CONTROL PLANS TO THE CITY OF ST. HELENS FOR APPROVAL PRIOR TO CONSTRUCTION. TWO WAY TRAFFIC WITH MINIMUM LANE WIDTHS OF 10 FEET MUST BE MAINTAINED FOR THE DURATION OF CONSTRUCTION.
7. CONTRACTOR SHALL SUBMIT TEMPORARY PEDESTRIAN ACCESS ROUTE PLANS TO THE CITY OF ST. HELENS FOR APPROVAL PRIOR TO CONSTRUCTION. PEDESTRIAN DETOUR ROUTES MUST BE NO LONGER THAN 1 BLOCK LENGTH. THE MAXIMUM CLOSURE TIME FOR ANY SINGLE CURB RAMP SHALL BE ONE WEEK.
8. CONTRACTOR SHALL NOTIFY ENGINEER ONCE RAMPS ARE COMPLETED FOR A POST RAMP CONSTRUCTION INSPECTION. ENGINEER SHALL PROVIDE ODOT STANDARD RAMP INSPECTION FORMS TO THE CITY OF ST. HELENS.

CURB RETURN LEGEND

TURNING SPACE MIN. LEVEL AREA 4'X4' 4'X5' WHEN CONSTRAINED (WITH LONGER DIMENSION IN DIRECTION OF PEDESTRIAN CROSSING). FOR THE PURPOSED OF THIS APPLICATION, A MAX. 2.0% FINISHED SURFACE SLOPE (FOR DRAINAGE) IS CONSIDERED LEVEL.

TRUNCATED DOME DETECTABLE WARNING SURFACE

SLOPE 1.5% MAX.
(MAX. 2.0% FINISHED SURFACE SLOPE)
(NORMAL SIDEWALK CROSS SLOPE)

SLOPE 7.5% MAX.
(MAX. 8.3% FINISHED SURFACE SLOPE)
(RAMP LENGTH 15' MAX., MEASURED ALONG FINISHED SURFACE SLOPE)

COUNTER SLOPE (4% MAX)

FL FLOW LINE ELEVATION

TS TOP OF SIDEWALK/PATH ELEVATION

WING NOTES:

1. WING FLARES SHALL BE 6' LONG UNLESS OTHERWISE NOTED.
2. WING FLARES SHALL BE 10% MAX.
3. WING FLARES SHALL NOT EXCEED 15' LENGTH MEASURED ALONG CURB LINE AND SHALL BE STRAIGHT GRADED.

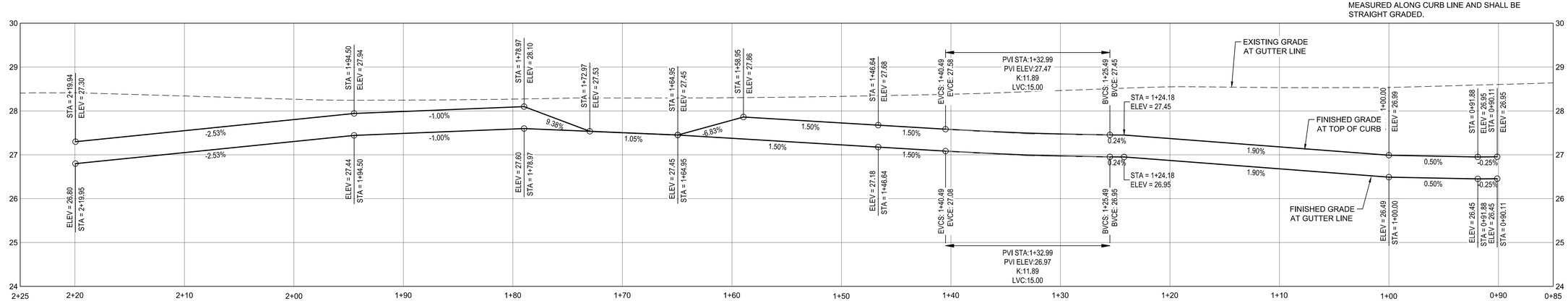

STRAND STREET & STREET A PROFILE (SW RETURN)

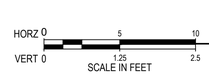

City of St. Helens
FOUNDED 1850

REGISTERED PROFESSIONAL ENGINEER
72,629
OREGON
JUNE 11, 2008
KEITH BUISMAN
PRELIMINARY
EXPIRES: 12/31/2023

Otak
Otak, Inc.
808 SW Third Avenue, Ste. 800
Portland, OR 97204
503. 287. 6825
www.otak.com

S. 1ST AND STRAND STREETS ROAD AND UTILITY EXTENSIONS

ST. HELENS, OREGON
CURB RETURNS

STRAND STREET & STREET A (SW RETURN)

TITLE		
#	DATE	DESCRIPTION

REVISIONS

NAVD88
DATUM

OTAK CAD — KJB
DRAWN BY — CHECKED BY

90% PLANS
STATUS

JANUARY 10, 2022
DATE

19823
PROJECT NUMBER

2F-11

© 2021 OTAK, INC.

If this drawing is not 22" x 34", it has been reduced/enlarged. Scale accordingly.

Plotted: Jan 10, 2022 - 6:11pm keith.buisman L:\Project\19800\19823\CADD\ACAD\Dwg\C19823CE.dwg Layout Name: 2F-11

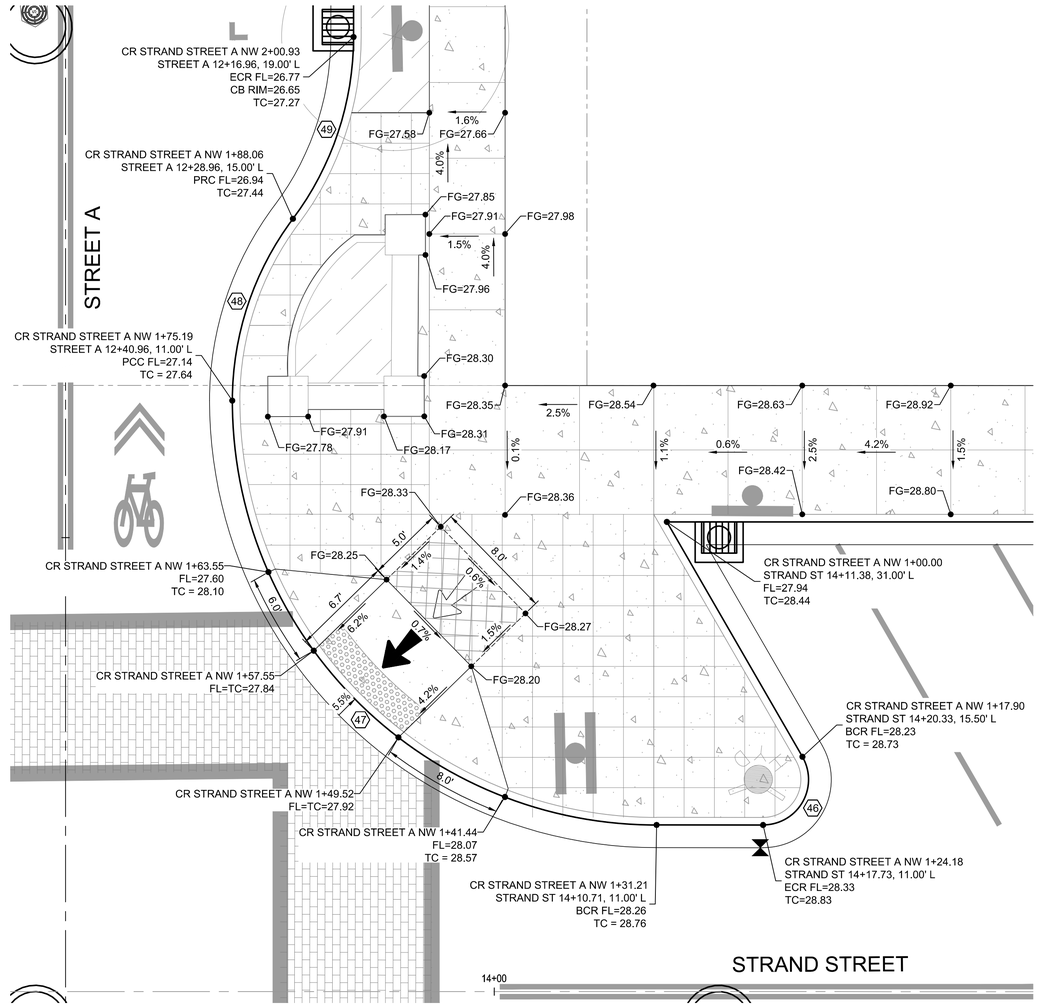

CURB RETURN CURVE DATA

NO.	STATION & OFFSET	CURVE
46	BCR= STRAND ST 14+20.33 15.50 L ECR= 14+17.73 11.00 L STRAND ST	D = 120°00'00" R = 3.00 T = 5.20 L = 6.28
47	BCR= STRAND ST 14+10.71 11.00 L ECR= 12+40.96 11.00 L STREET A	D = 90°00'00" R = 28.00 T = 28.00 L = 43.98
48	BCR= STREET A 12+40.96 11.00 L ECR= 12+28.96 15.00 L STREET A	D = 36°52'12" R = 20.00 T = 6.67 L = 12.87
49	BCR= STREET A 12+28.96 15.00 L ECR= 12+16.96 19.00 L STREET A	D = 36°52'12" R = 20.00 T = 6.67 L = 12.87

GENERAL NOTES

1. CONTRACTOR SHALL BE RESPONSIBLE FOR MEETING ALL AMERICANS WITH DISABILITIES ACT (ADA) REQUIREMENTS AS DEFINED BY THE PUBLIC RIGHTS-OF-WAY ACCESSIBILITY GUIDELINES (PROWAG).
2. DETAILS AND DIMENSIONS SHOWN ARE APPROXIMATE. SLOPES HOLD OVER ELEVATIONS. CONTRACTOR SHALL TAKE ALL NECESSARY FIELD MEASUREMENTS TO VERIFY ADA COMPLIANCE AND NOTIFY THE ENGINEER IF RAMPS CANNOT BE CONSTRUCTED AS SHOWN.
3. REFER TO ODOT STD. DWG RD 900 FOR ADA REQUIREMENTS.
4. CONTRACTOR SHALL NOTIFY ENGINEER AND CITY OF ST. HELENS 24 HOURS PRIOR TO CONCRETE POURS TO INSPECT FORMS AND VERIFY ADA STANDARDS CAN BE ACHIEVED.
5. CONTRACTOR SHALL PROTECT FRESHLY POURED CONCRETE FROM VANDALISM OR OTHER DAMAGE FOR A MINIMUM OF 24 HOURS OR UNTIL CURED ENOUGH TO SUPPORT TYPICAL USE, WHICHEVER IS LONGER. ANY CONCRETE DAMAGE WITHIN THIS TIME PERIOD SHALL BE REPAIRED AT NO COST TO THE CITY.
6. CONTRACTOR SHALL SUBMIT TRAFFIC CONTROL PLANS TO THE CITY OF ST. HELENS FOR APPROVAL PRIOR TO CONSTRUCTION. TWO WAY TRAFFIC WITH MINIMUM LANE WIDTHS OF 10 FEET MUST BE MAINTAINED FOR THE DURATION OF CONSTRUCTION.
7. CONTRACTOR SHALL SUBMIT TEMPORARY PEDESTRIAN ACCESS ROUTE PLANS TO THE CITY OF ST. HELENS FOR APPROVAL PRIOR TO CONSTRUCTION. PEDESTRIAN DETOUR ROUTES MUST BE NO LONGER THAN 1 BLOCK LENGTH. THE MAXIMUM CLOSURE TIME FOR ANY SINGLE CURB RAMP SHALL BE ONE WEEK.
8. CONTRACTOR SHALL NOTIFY ENGINEER ONCE RAMPS ARE COMPLETED FOR A POST RAMP CONSTRUCTION INSPECTION. ENGINEER SHALL PROVIDE ODOT STANDARD RAMP INSPECTION FORMS TO THE CITY OF ST. HELENS.

CURB RETURN LEGEND

TURNING SPACE MIN. LEVEL AREA 4'X4' 4'X5' WHEN CONSTRAINED (WITH LONGER DIMENSION IN DIRECTION OF PEDESTRIAN CROSSING). FOR THE PURPOSED OF THIS APPLICATION, A MAX. 2.0% FINISHED SURFACE SLOPE (FOR DRAINAGE) IS CONSIDERED LEVEL.

TRUNCATED DOME DETECTABLE WARNING SURFACE

SLOPE 1.5% MAX.
(MAX. 2.0% FINISHED SURFACE SLOPE)
(NORMAL SIDEWALK CROSS SLOPE)

SLOPE 7.5% MAX.
(MAX. 8.3% FINISHED SURFACE SLOPE)
(RAMP LENGTH 15' MAX., MEASURED ALONG FINISHED SURFACE SLOPE)

COUNTER SLOPE (4% MAX)

FL FLOW LINE ELEVATION

TS TOP OF SIDEWALK/PATH ELEVATION

WING NOTES:

1. WING FLARES SHALL BE 6' LONG UNLESS OTHERWISE NOTED.
2. WING FLARES SHALL BE 10% MAX.
3. WING FLARES SHALL NOT EXCEED 15' LENGTH MEASURED ALONG CURB LINE AND SHALL BE STRAIGHT GRADED.

0 5 10
SCALE IN FEET

STRAND STREET & STREET A (NW RETURN)

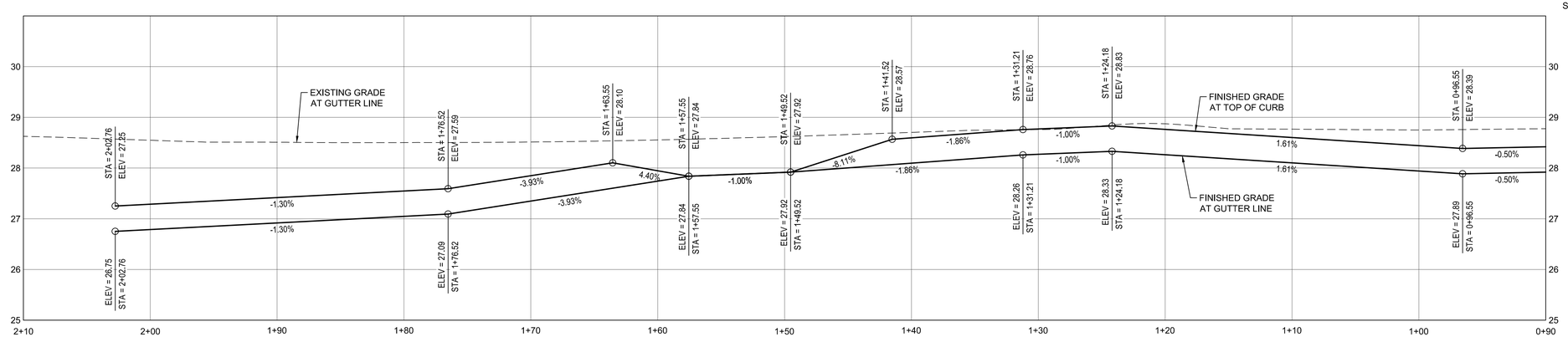

HORZ 0 5 10
VERT 0 1.25 2.5
SCALE IN FEET

STRAND STREET & STREET A PROFILE (NW RETURN)

REGISTERED PROFESSIONAL ENGINEER 72,629 OREGON JUNE 11, 2008 KEITH BUISMAN
PRELIMINARY
EXPIRES: 12/31/2023

Otak, Inc.
808 SW Third Avenue, Ste. 800
Portland, OR 97204
503. 287. 6825
www.otak.com

S. 1ST AND STRAND STREETS ROAD AND UTILITY EXTENSIONS

ST. HELENS, OREGON
CURB RETURNS

STRAND STREET & STREET A (NW RETURN)

TITLE

#	DATE	DESCRIPTION

REVISIONS

NAVD88
DATUM

OTAK CAD — KJB
DRAWN BY — CHECKED BY

90% PLANS
STATUS

JANUARY 10, 2022
DATE

19823
PROJECT NUMBER

2F-12

© 2021 OTAK, INC.

If this drawing is not 22" x 34", it has been reduced/enlarged. Scale accordingly.

Plotted: Jan 10, 2022 - 6:12pm keith.buisman I:\Project\19800\19823\CAD\ACAD\Dwg\C19823CE.dwg Layout Name: 2F-12

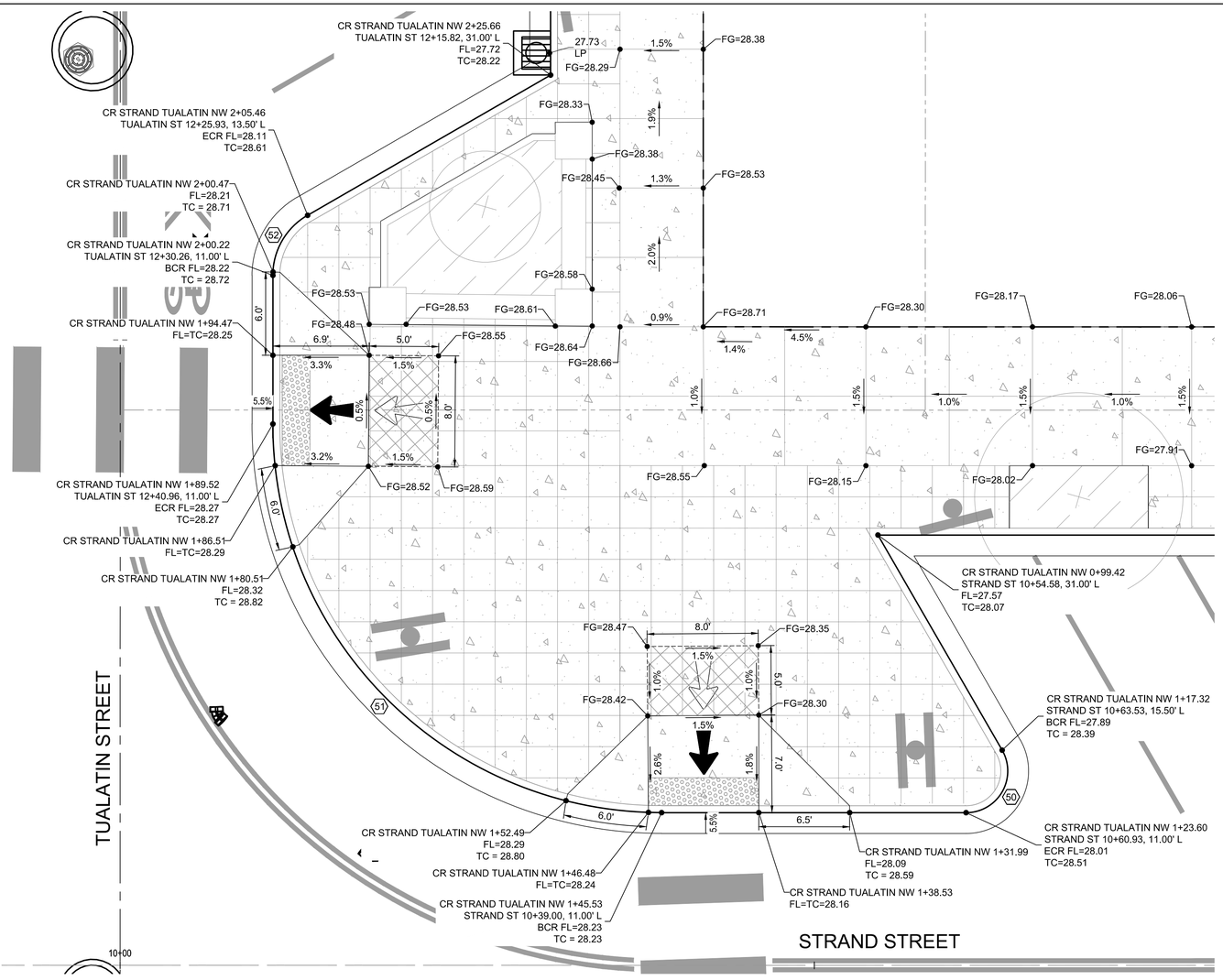

STRAND STREET & TUALATIN STREET (NW RETURN)

SCALE IN FEET

CURB RETURN CURVE DATA			
NO.	STATION & OFFSET		CURVE
50	BCR=	STRAND ST 10+63.53 15.50 L	D = 120°00'00" R = 3.00 T = 5.20 L = 6.28
	. . . ECR=	10+60.93 11.00 L STRAND ST	
51	BCR=	STRAND ST 10+39.00 11.00 L	D = 90°00'00" R = 28.00 T = 28.00 L = 43.98
	. . . ECR=	12+40.96 11.00 L TUALATIN ST	
52	BCR=	TUALATIN ST 12+30.26 11.00 L	D = 60°00'00" R = 5.00 T = 2.89 L = 5.24
	. . . ECR=	12+25.93 13.50 L TUALATIN ST	

GENERAL NOTES

1. CONTRACTOR SHALL BE RESPONSIBLE FOR MEETING ALL AMERICANS WITH DISABILITIES ACT (ADA) REQUIREMENTS AS DEFINED BY THE PUBLIC RIGHTS-OF-WAY ACCESSIBILITY GUIDELINES (PROWAG).
2. DETAILS AND DIMENSIONS SHOWN ARE APPROXIMATE. SLOPES HOLD OVER ELEVATIONS. CONTRACTOR SHALL TAKE ALL NECESSARY FIELD MEASUREMENTS TO VERIFY ADA COMPLIANCE AND NOTIFY THE ENGINEER IF RAMPS CANNOT BE CONSTRUCTED AS SHOWN.
3. REFER TO ODOT STD. DWG RD 900 FOR ADA REQUIREMENTS.
4. CONTRACTOR SHALL NOTIFY ENGINEER AND CITY OF ST. HELENS 24 HOURS PRIOR TO CONCRETE POURS TO INSPECT FORMS AND VERIFY ADA STANDARDS CAN BE ACHIEVED.
5. CONTRACTOR SHALL PROTECT FRESHLY POURED CONCRETE FROM VANDALISM OR OTHER DAMAGE FOR A MINIMUM OF 24 HOURS OR UNTIL CURED ENOUGH TO SUPPORT TYPICAL USE, WHICHEVER IS LONGER. ANY CONCRETE DAMAGE WITHIN THIS TIME PERIOD SHALL BE REPAIRED AT NO COST TO THE CITY.
6. CONTRACTOR SHALL SUBMIT TRAFFIC CONTROL PLANS TO THE CITY OF ST. HELENS FOR APPROVAL PRIOR TO CONSTRUCTION. TWO WAY TRAFFIC WITH MINIMUM LANE WIDTHS OF 10 FEET MUST BE MAINTAINED FOR THE DURATION OF CONSTRUCTION.
7. CONTRACTOR SHALL SUBMIT TEMPORARY PEDESTRIAN ACCESS ROUTE PLANS TO THE CITY OF ST. HELENS FOR APPROVAL PRIOR TO CONSTRUCTION. PEDESTRIAN DETOUR ROUTES MUST BE NO LONGER THAN 1 BLOCK LENGTH. THE MAXIMUM CLOSURE TIME FOR ANY SINGLE CURB RAMP SHALL BE ONE WEEK.
8. CONTRACTOR SHALL NOTIFY ENGINEER ONCE RAMPS ARE COMPLETED FOR A POST RAMP CONSTRUCTION INSPECTION. ENGINEER SHALL PROVIDE ODOT STANDARD RAMP INSPECTION FORMS TO THE CITY OF ST. HELENS.

CURB RETURN LEGEND

TURNING SPACE MIN. LEVEL AREA 4'X4' 4'X5' WHEN CONSTRAINED (WITH LONGER DIMENSION IN DIRECTION OF PEDESTRIAN CROSSING). FOR THE PURPOSED OF THIS APPLICATION, A MAX. 2.0% FINISHED SURFACE SLOPE (FOR DRAINAGE) IS CONSIDERED LEVEL.

TRUNCATED DOME DETECTABLE WARNING SURFACE

SLOPE 1.5% MAX.
(MAX. 2.0% FINISHED SURFACE SLOPE)
(NORMAL SIDEWALK CROSS SLOPE)

SLOPE 7.5% MAX.
(MAX. 8.3% FINISHED SURFACE SLOPE)
(RAMP LENGTH 15' MAX., MEASURED ALONG FINISHED SURFACE SLOPE)

COUNTER SLOPE (4% MAX)

FL FLOW LINE ELEVATION

TS TOP OF SIDEWALK/PATH ELEVATION

WING NOTES:

1. WING FLARES SHALL BE 6' LONG UNLESS OTHERWISE NOTED.
2. WING FLARES SHALL BE 10% MAX.
3. WING FLARES SHALL NOT EXCEED 15' LENGTH MEASURED ALONG CURB LINE AND SHALL BE STRAIGHT GRADED.

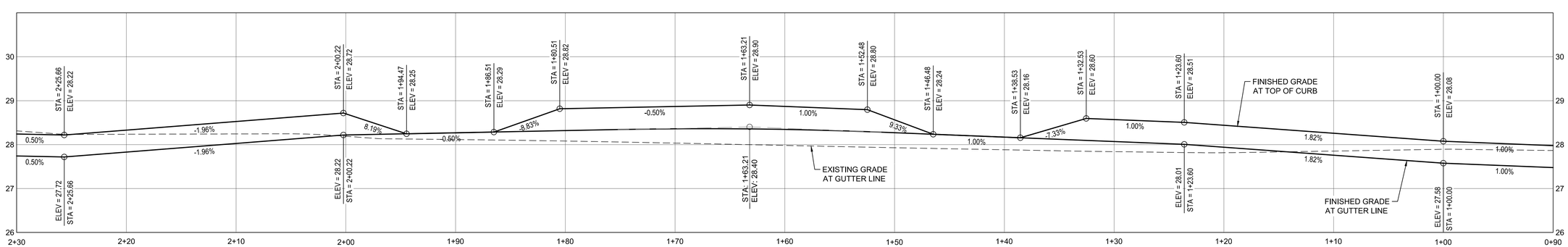

STRAND STREET & TUALATIN STREET PROFILE (NW RETURN)

HORZ 0 5 10
VERT 0 1.25 2.5
SCALE IN FEET

City of St. Helens FOUNDED 1850

REGISTERED PROFESSIONAL ENGINEER 72,629 OREGON JUNE 11, 2008 KEITH BUISMAN
PRELIMINARY
EXPIRES: 12/31/2023

Otak
Otak, Inc.
808 SW Third Avenue, Ste. 800
Portland, OR 97204
503. 287. 6825
www.otak.com

S. 1ST AND STRAND STREETS ROAD AND UTILITY EXTENSIONS

ST. HELENS, OREGON
CURB RETURNS

STRAND STREET & TUALATIN STREET (NW RETURN)

TITLE

#	DATE	DESCRIPTION

REVISIONS

NAVD88
DATUM

OTAK CAD — KJB
DRAWN BY — CHECKED BY

90% PLANS
STATUS

JANUARY 10, 2022
DATE

19823
PROJECT NUMBER

2F-13

© 2021 OTAK, INC.

If this drawing is not 22" x 34", it has been reduced/enlarged. Scale accordingly.

Plotted: Jan 10, 2022 - 6:13pm keith.buisman L:\Project\19800\19823\CADD\ACAD\Dwg\C19823CF.dwg Layout Name: 2F-13

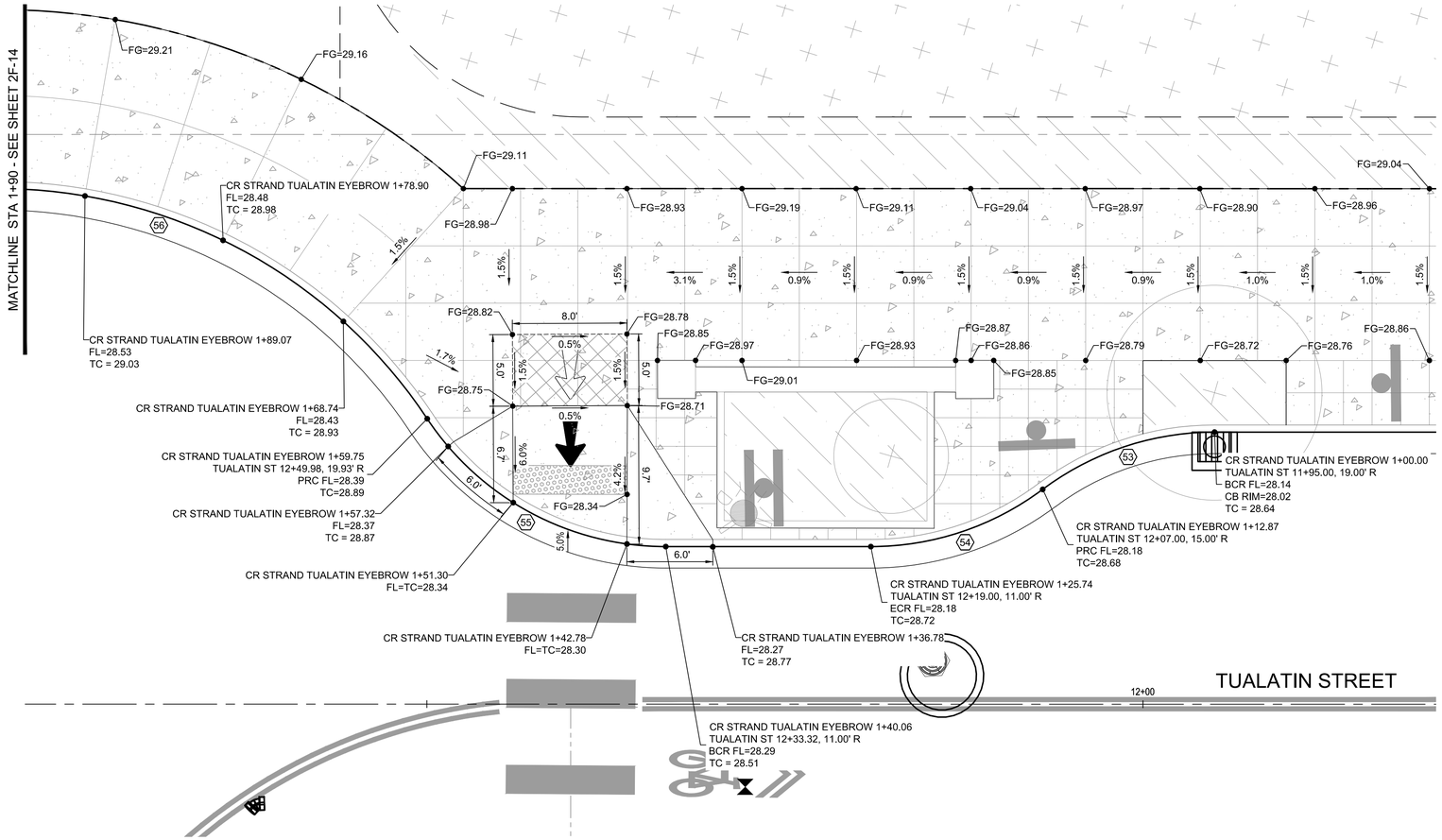

STRAND STREET & TUALATIN STREET (EYEBROW) STA 0+90 TO 1+90

SCALE IN FEET

CURB RETURN CURVE DATA			
NO.	STATION & OFFSET		CURVE
53	BCR=	TUALATIN ST 11+95.00 19.00 R	D = 36°52'11" R = 20.00 T = 6.67 L = 12.87
	ECR=	12+07.00 15.00 R TUALATIN ST	
54	BCR=	TUALATIN ST 12+07.00 15.00 R	D = 36°52'12" R = 20.00 T = 6.67 L = 12.87
	ECR=	12+19.00 11.00 R TUALATIN ST	
55	BCR=	TUALATIN ST 12+33.32 11.00 R	D = 56°23'15" R = 20.00 T = 10.72 L = 19.68
	ECR=	12+49.98 19.93 R TUALATIN ST	
56	BCR=	TUALATIN ST 12+49.98 19.93 R	D = 202°46'31" R = 36.00 T = 178.74 L = 127.41
	ECR=	10+29.98 19.93 R STRAND ST	

GENERAL NOTES

1. CONTRACTOR SHALL BE RESPONSIBLE FOR MEETING ALL AMERICANS WITH DISABILITIES ACT (ADA) REQUIREMENTS AS DEFINED BY THE PUBLIC RIGHTS-OF-WAY ACCESSIBILITY GUIDELINES (PROWAG).
2. DETAILS AND DIMENSIONS SHOWN ARE APPROXIMATE. SLOPES HOLD OVER ELEVATIONS. CONTRACTOR SHALL TAKE ALL NECESSARY FIELD MEASUREMENTS TO VERIFY ADA COMPLIANCE AND NOTIFY THE ENGINEER IF RAMPS CANNOT BE CONSTRUCTED AS SHOWN.
3. REFER TO ODOT STD. DWG RD 900 FOR ADA REQUIREMENTS.
4. CONTRACTOR SHALL NOTIFY ENGINEER AND CITY OF ST. HELENS 24 HOURS PRIOR TO CONCRETE POURS TO INSPECT FORMS AND VERIFY ADA STANDARDS CAN BE ACHIEVED.
5. CONTRACTOR SHALL PROTECT FRESHLY POURED CONCRETE FROM VANDALISM OR OTHER DAMAGE FOR A MINIMUM OF 24 HOURS OR UNTIL CURED ENOUGH TO SUPPORT TYPICAL USE, WHICHEVER IS LONGER. ANY CONCRETE DAMAGE WITHIN THIS TIME PERIOD SHALL BE REPAIRED AT NO COST TO THE CITY.
6. CONTRACTOR SHALL SUBMIT TRAFFIC CONTROL PLANS TO THE CITY OF ST. HELENS FOR APPROVAL PRIOR TO CONSTRUCTION. TWO WAY TRAFFIC WITH MINIMUM LANE WIDTHS OF 10 FEET MUST BE MAINTAINED FOR THE DURATION OF CONSTRUCTION.
7. CONTRACTOR SHALL SUBMIT TEMPORARY PEDESTRIAN ACCESS ROUTE PLANS TO THE CITY OF ST. HELENS FOR APPROVAL PRIOR TO CONSTRUCTION. PEDESTRIAN DETOUR ROUTES MUST BE NO LONGER THAN 1 BLOCK LENGTH. THE MAXIMUM CLOSURE TIME FOR ANY SINGLE CURB RAMP SHALL BE ONE WEEK.
8. CONTRACTOR SHALL NOTIFY ENGINEER ONCE RAMPS ARE COMPLETED FOR A POST RAMP CONSTRUCTION INSPECTION. ENGINEER SHALL PROVIDE ODOT STANDARD RAMP INSPECTION FORMS TO THE CITY OF ST. HELENS.

CURB RETURN LEGEND

TURNING SPACE MIN. LEVEL AREA 4'X4' 4'X5' WHEN CONSTRAINED (WITH LONGER DIMENSION IN DIRECTION OF PEDESTRIAN CROSSING). FOR THE PURPOSED OF THIS APPLICATION, A MAX. 2.0% FINISHED SURFACE SLOPE (FOR DRAINAGE) IS CONSIDERED LEVEL.

TRUNCATED DOME DETECTABLE WARNING SURFACE

SLOPE 1.5% MAX.
(MAX. 2.0% FINISHED SURFACE SLOPE)
(NORMAL SIDEWALK CROSS SLOPE)

SLOPE 7.5% MAX.
(MAX. 8.3% FINISHED SURFACE SLOPE)
(RAMP LENGTH 15' MAX., MEASURED ALONG FINISHED SURFACE SLOPE)

COUNTER SLOPE (4% MAX)

FL FLOW LINE ELEVATION

TS TOP OF SIDEWALK/PATH ELEVATION

WING NOTES:

1. WING FLARES SHALL BE 6' LONG UNLESS OTHERWISE NOTED.
2. WING FLARES SHALL BE 10% MAX.
3. WING FLARES SHALL NOT EXCEED 15' LENGTH MEASURED ALONG CURB LINE AND SHALL BE STRAIGHT GRADED.

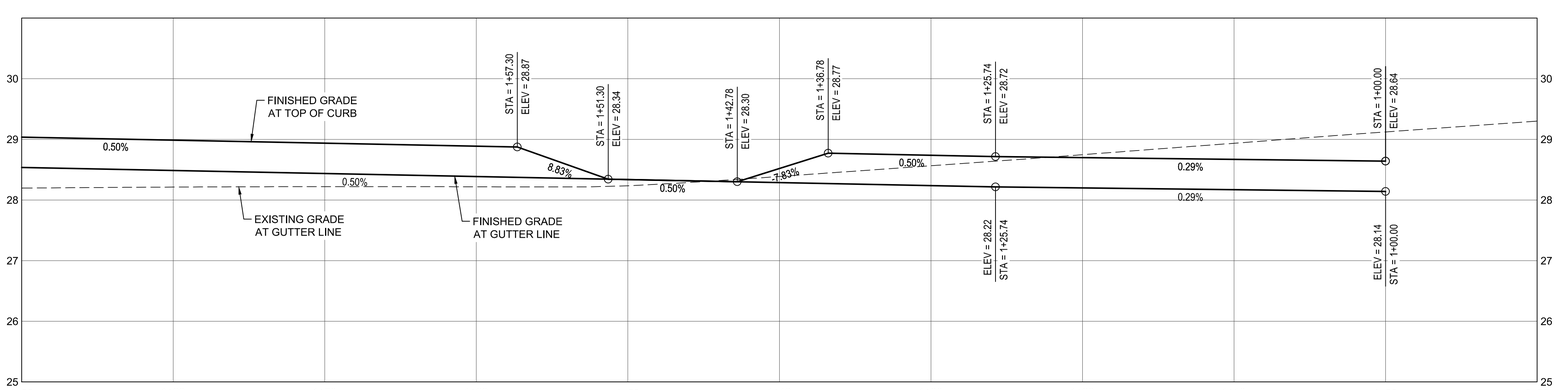

STRAND STREET & TUALATIN STREET PROFILE (EYEBROW) STA 0+90 - 1+90

HORZ 0 5 10
VERT 0 1.25 2.5
SCALE IN FEET

City of St. Helens FOUNDED 1850

REGISTERED PROFESSIONAL ENGINEER 72,629 OREGON JUNE 11, 2008 KEITH BUISMAN
PRELIMINARY
EXPIRES: 12/31/2023

Otak
Otak, Inc.
808 SW Third Avenue, Ste. 800
Portland, OR 97204
503. 287. 6825
www.otak.com

S. 1ST AND STRAND STREETS ROAD AND UTILITY EXTENSIONS

ST. HELENS, OREGON
CURB RETURNS

STRAND STREET & TUALATIN STREET (EYEBROW)

TITLE

#	DATE	DESCRIPTION

REVISIONS

NAVD88
DATUM

OTAK CAD — KJB
DRAWN BY — CHECKED BY

90% PLANS
STATUS

JANUARY 10, 2022
DATE

19823
PROJECT NUMBER

2F-14

© 2021 OTAK, INC.

If this drawing is not 22" x 34", it has been reduced/enlarged. Scale accordingly.

Plotted: Jan 10, 2022 - 6:13pm, keith.buisman L:\Projects\19800\19823\CADD\ACAD\Dwg\C\19823C2F.dwg Layout Name: 2F-14

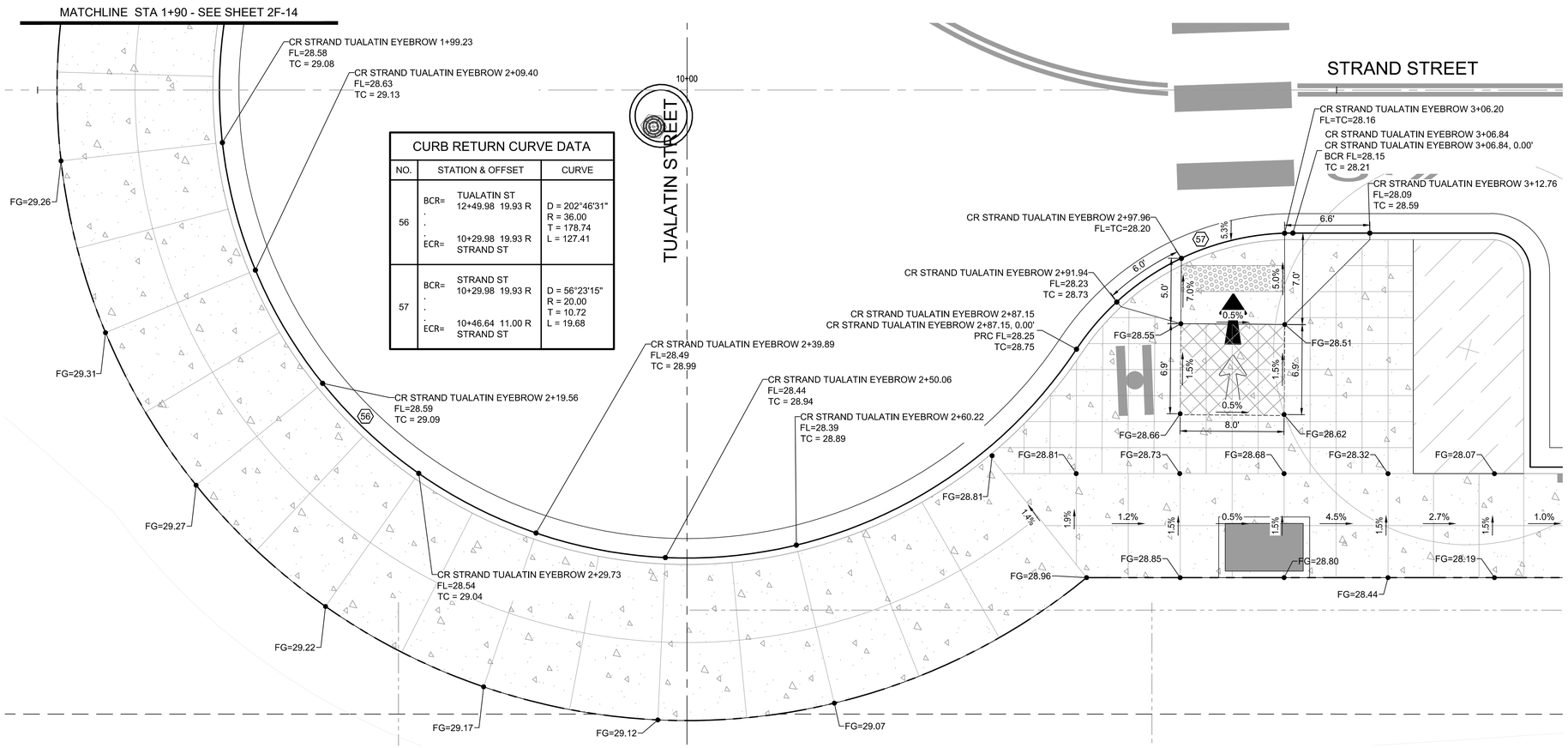

STRAND STREET & TUALATIN STREET (EYEBROW) STA 1+90 - 3+30

CURB RETURN CURVE DATA

NO.	STATION & OFFSET		CURVE
56	BCR=	TUALATIN ST 12+49.98 19.93 R	D = 202°46'31" R = 36.00 T = 178.74 L = 127.41
	. . . ECR=	10+29.98 19.93 R STRAND ST	
57	BCR=	STRAND ST 10+29.98 19.93 R	D = 56°23'15" R = 20.00 T = 10.72 L = 19.68
	. . . ECR=	10+46.64 11.00 R STRAND ST	

GENERAL NOTES

1. CONTRACTOR SHALL BE RESPONSIBLE FOR MEETING ALL AMERICANS WITH DISABILITIES ACT (ADA) REQUIREMENTS AS DEFINED BY THE PUBLIC RIGHTS-OF-WAY ACCESSIBILITY GUIDELINES (PROWAG).
2. DETAILS AND DIMENSIONS SHOWN ARE APPROXIMATE. SLOPES HOLD OVER ELEVATIONS. CONTRACTOR SHALL TAKE ALL NECESSARY FIELD MEASUREMENTS TO VERIFY ADA COMPLIANCE AND NOTIFY THE ENGINEER IF RAMPS CANNOT BE CONSTRUCTED AS SHOWN.
3. REFER TO ODOT STD. DWG RD 900 FOR ADA REQUIREMENTS.
4. CONTRACTOR SHALL NOTIFY ENGINEER AND CITY OF ST. HELENS 24 HOURS PRIOR TO CONCRETE POURS TO INSPECT FORMS AND VERIFY ADA STANDARDS CAN BE ACHIEVED.
5. CONTRACTOR SHALL PROTECT FRESHLY POURED CONCRETE FROM VANDALISM OR OTHER DAMAGE FOR A MINIMUM OF 24 HOURS OR UNTIL CURED ENOUGH TO SUPPORT TYPICAL USE, WHICHEVER IS LONGER. ANY CONCRETE DAMAGE WITHIN THIS TIME PERIOD SHALL BE REPAIRED AT NO COST TO THE CITY.
6. CONTRACTOR SHALL SUBMIT TRAFFIC CONTROL PLANS TO THE CITY OF ST. HELENS FOR APPROVAL PRIOR TO CONSTRUCTION. TWO WAY TRAFFIC WITH MINIMUM LANE WIDTHS OF 10 FEET MUST BE MAINTAINED FOR THE DURATION OF CONSTRUCTION.
7. CONTRACTOR SHALL SUBMIT TEMPORARY PEDESTRIAN ACCESS ROUTE PLANS TO THE CITY OF ST. HELENS FOR APPROVAL PRIOR TO CONSTRUCTION. PEDESTRIAN DETOUR ROUTES MUST BE NO LONGER THAN 1 BLOCK LENGTH. THE MAXIMUM CLOSURE TIME FOR ANY SINGLE CURB RAMP SHALL BE ONE WEEK.
8. CONTRACTOR SHALL NOTIFY ENGINEER ONCE RAMPS ARE COMPLETED FOR A POST RAMP CONSTRUCTION INSPECTION. ENGINEER SHALL PROVIDE ODOT STANDARD RAMP INSPECTION FORMS TO THE CITY OF ST. HELENS.

CURB RETURN LEGEND

TURNING SPACE MIN. LEVEL AREA 4'X4' 4'X5' WHEN CONSTRAINED (WITH LONGER DIMENSION IN DIRECTION OF PEDESTRIAN CROSSING). FOR THE PURPOSED OF THIS APPLICATION, A MAX. 2.0% FINISHED SURFACE SLOPE (FOR DRAINAGE) IS CONSIDERED LEVEL.

TRUNCATED DOME DETECTABLE WARNING SURFACE

SLOPE 1.5% MAX.
(MAX. 2.0% FINISHED SURFACE SLOPE)
(NORMAL SIDEWALK CROSS SLOPE)

SLOPE 7.5% MAX.
(MAX. 8.3% FINISHED SURFACE SLOPE)
(RAMP LENGTH 15' MAX., MEASURED ALONG FINISHED SURFACE SLOPE)

COUNTER SLOPE (4% MAX)

FL FLOW LINE ELEVATION

TS TOP OF SIDEWALK/PATH ELEVATION

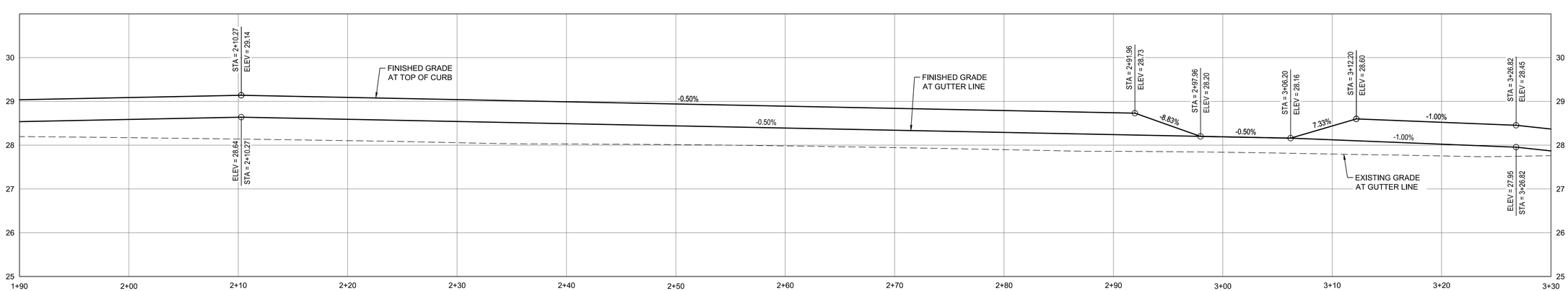

STRAND STREET & TUALATIN STREET PROFILE (EYEBROW) STA 1+90 - 3+30

HORZ 0 5 10
VERT 0 1.25 2.5
SCALE IN FEET

City of St. Helens FOUNDED 1850

REGISTERED PROFESSIONAL ENGINEER 72,629 OREGON JUNE 11, 2008 KEITH BUISMAN
PRELIMINARY
EXPIRES: 12/31/2023

Otak
Otak, Inc.
808 SW Third Avenue, Ste. 800
Portland, OR 97204
503. 287. 6825
www.otak.com

S. 1ST AND STRAND STREETS ROAD AND UTILITY EXTENSIONS

ST. HELENS, OREGON
CURB RETURNS

STRAND STREET & TUALATIN STREET (EYEBROW)

#	DATE	DESCRIPTION

REVISIONS

NAVD88
DATUM

OTAK CAD — DRAWN BY
KJB — CHECKED BY

90% PLANS
STATUS

JANUARY 10, 2022
DATE

19823
PROJECT NUMBER

2F-15

© 2021 OTAK, INC.

If this drawing is not 22" x 34", it has been reduced/enlarged. Scale accordingly.

Plotted: Jan 10, 2022 - 6:14pm keith.buisman L:\Project\19800\19823\CADD\ACAD\Dwg\C19823CE.dwg Layout Name: 2F-15

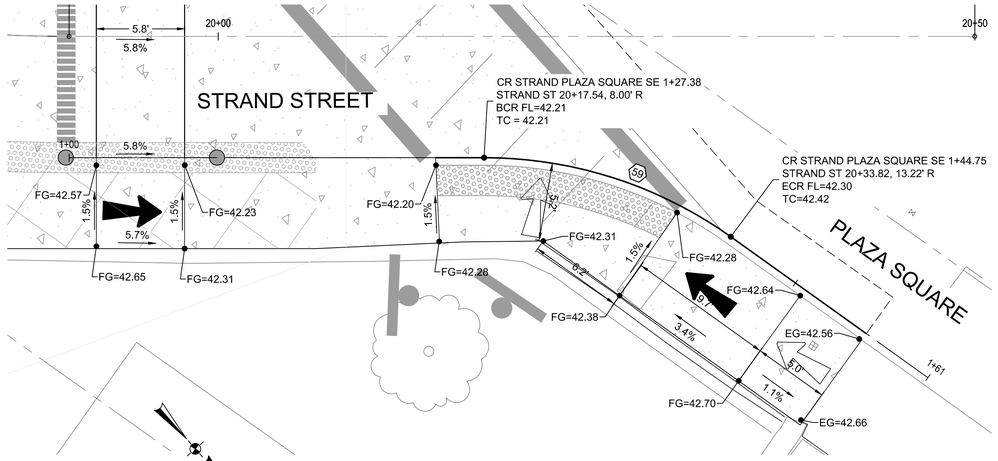

STRAND STREET & PLAZA SQUARE (EAST RETURN)

SCALE IN FEET

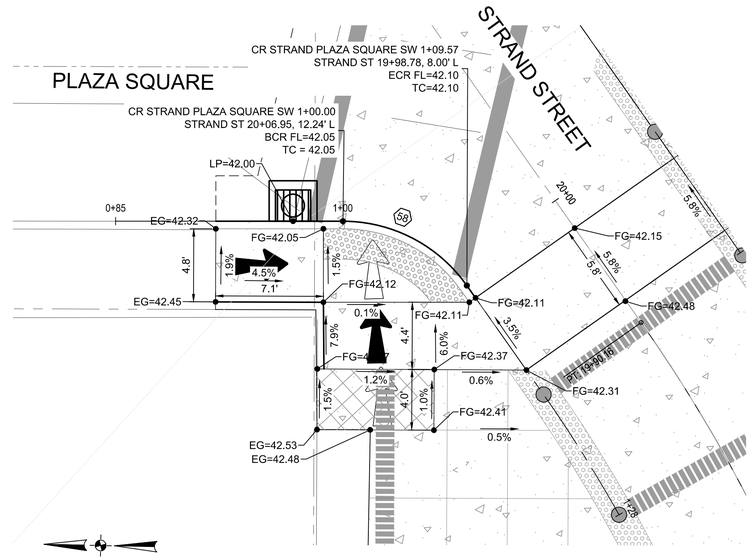

STRAND STREET & PLAZA SQUARE (WEST RETURN)

SCALE IN FEET

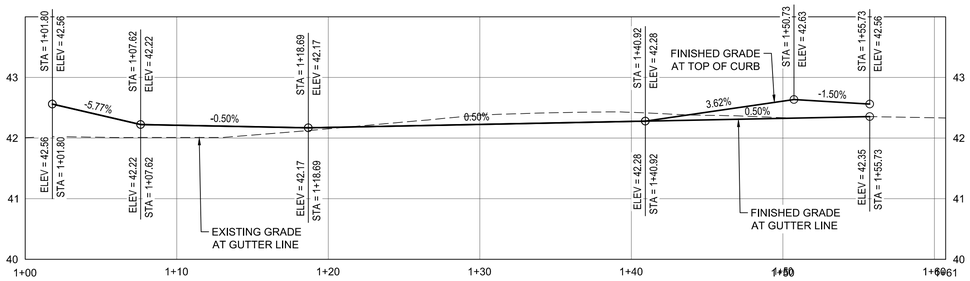

STRAND STREET & PLAZA SQUARE PROFILE (EAST RETURN)

HORZ 0 5 10

VERT 0 1.25 2.5

SCALE IN FEET

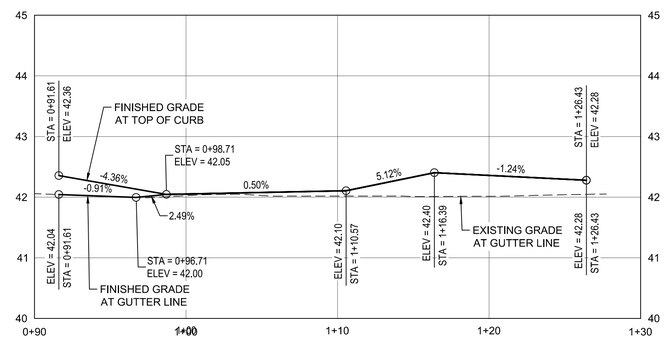

STRAND STREET & PLAZA SQUARE PROFILE (WEST RETURN)

HORZ 0 5 10

VERT 0 1.25 2.5

SCALE IN FEET

GENERAL NOTES

1. CONTRACTOR SHALL BE RESPONSIBLE FOR MEETING ALL AMERICANS WITH DISABILITIES ACT (ADA) REQUIREMENTS AS DEFINED BY THE PUBLIC RIGHTS-OF-WAY ACCESSIBILITY GUIDELINES (PROWAG).
2. DETAILS AND DIMENSIONS SHOWN ARE APPROXIMATE. SLOPES HOLD OVER ELEVATIONS. CONTRACTOR SHALL TAKE ALL NECESSARY FIELD MEASUREMENTS TO VERIFY ADA COMPLIANCE AND NOTIFY THE ENGINEER IF RAMPS CANNOT BE CONSTRUCTED AS SHOWN.
3. REFER TO ODOT STD. DWG RD 900 FOR ADA REQUIREMENTS.
4. CONTRACTOR SHALL NOTIFY ENGINEER AND CITY OF ST. HELENS 24 HOURS PRIOR TO CONCRETE POURS TO INSPECT FORMS AND VERIFY ADA STANDARDS CAN BE ACHIEVED.
5. CONTRACTOR SHALL PROTECT FRESHLY POURED CONCRETE FROM VANDALISM OR OTHER DAMAGE FOR A MINIMUM OF 24 HOURS OR UNTIL CURED ENOUGH TO SUPPORT TYPICAL USE, WHICHEVER IS LONGER. ANY CONCRETE DAMAGE WITHIN THIS TIME PERIOD SHALL BE REPAIRED AT NO COST TO THE CITY.
6. CONTRACTOR SHALL SUBMIT TRAFFIC CONTROL PLANS TO THE CITY OF ST. HELENS FOR APPROVAL PRIOR TO CONSTRUCTION. TWO WAY TRAFFIC WITH MINIMUM LANE WIDTHS OF 10 FEET MUST BE MAINTAINED FOR THE DURATION OF CONSTRUCTION.
7. CONTRACTOR SHALL SUBMIT TEMPORARY PEDESTRIAN ACCESS ROUTE PLANS TO THE CITY OF ST. HELENS FOR APPROVAL PRIOR TO CONSTRUCTION. PEDESTRIAN DETOUR ROUTES MUST BE NO LONGER THAN 1 BLOCK LENGTH. THE MAXIMUM CLOSURE TIME FOR ANY SINGLE CURB RAMP SHALL BE ONE WEEK.
8. CONTRACTOR SHALL NOTIFY ENGINEER ONCE RAMPS ARE COMPLETED FOR A POST RAMP CONSTRUCTION INSPECTION. ENGINEER SHALL PROVIDE ODOT STANDARD RAMP INSPECTION FORMS TO THE CITY OF ST. HELENS.

CURB RETURN LEGEND

TURNING SPACE MIN. LEVEL AREA 4'X4' 4'X5' WHEN CONSTRAINED (WITH LONGER DIMENSION IN DIRECTION OF PEDESTRIAN CROSSING). FOR THE PURPOSED OF THIS APPLICATION, A MAX. 2.0% FINISHED SURFACE SLOPE (FOR DRAINAGE) IS CONSIDERED LEVEL.

TRUNCATED DOME DETECTABLE WARNING SURFACE

SLOPE 1.5% MAX.
(MAX. 2.0% FINISHED SURFACE SLOPE)
(NORMAL SIDEWALK CROSS SLOPE)

SLOPE 7.5% MAX.
(MAX. 8.3% FINISHED SURFACE SLOPE)
(RAMP LENGTH 15' MAX., MEASURED ALONG FINISHED SURFACE SLOPE)

COUNTER SLOPE (4% MAX)

FL FLOW LINE ELEVATION

TS TOP OF SIDEWALK/PATH ELEVATION

WING NOTES:

1. WING FLARES SHALL BE 6' LONG UNLESS OTHERWISE NOTED.
2. WING FLARES SHALL BE 10% MAX.
3. WING FLARES SHALL NOT EXCEED 15' LENGTH MEASURED ALONG CURB LINE AND SHALL BE STRAIGHT GRADED.

CURB RETURN CURVE DATA

NO.	STATION & OFFSET	CURVE
58	BCR= STRAND ST 20+06.95 12.24 L ECR= 19+98.78 8.00 L STRAND ST	D = 54°51'34" R = 10.00 T = 5.19 L = 9.57
59	BCR= STRAND ST 20+17.54 8.00 R ECR= 20+33.82 13.22 R STRAND ST	D = 35°32'43" R = 28.00 T = 8.98 L = 17.37

REGISTERED PROFESSIONAL ENGINEER 72,629 OREGON JUNE 11, 2008 KEITH BUISMAN

PRELIMINARY

EXPIRES: 12/31/2023

Otak, Inc.
808 SW Third Avenue, Ste. 800
Portland, OR 97204
503. 287. 6825
www.otak.com

S. 1ST AND STRAND STREETS ROAD AND UTILITY EXTENSIONS

ST. HELENS, OREGON
CURB RETURNS

STRAND STREET & PLAZA SQUARE

TITLE

#	DATE	DESCRIPTION

REVISIONS

NAVD88
DATUM

OTAK CAD — DRAWN BY
KJB — CHECKED BY

90% PLANS
STATUS

JANUARY 10, 2022
DATE

19823
PROJECT NUMBER

2F-16

© 2021 OTAK, INC.

If this drawing is not 22" x 34", it has been reduced/enlarged. Scale accordingly.

Plotted: Jan 10, 2022 - 8:15pm, keith.buisman L:\Project\19800\19823\CAD\ACAD\Dwg\C19823C2F.dwg Layout Name: 2F-16

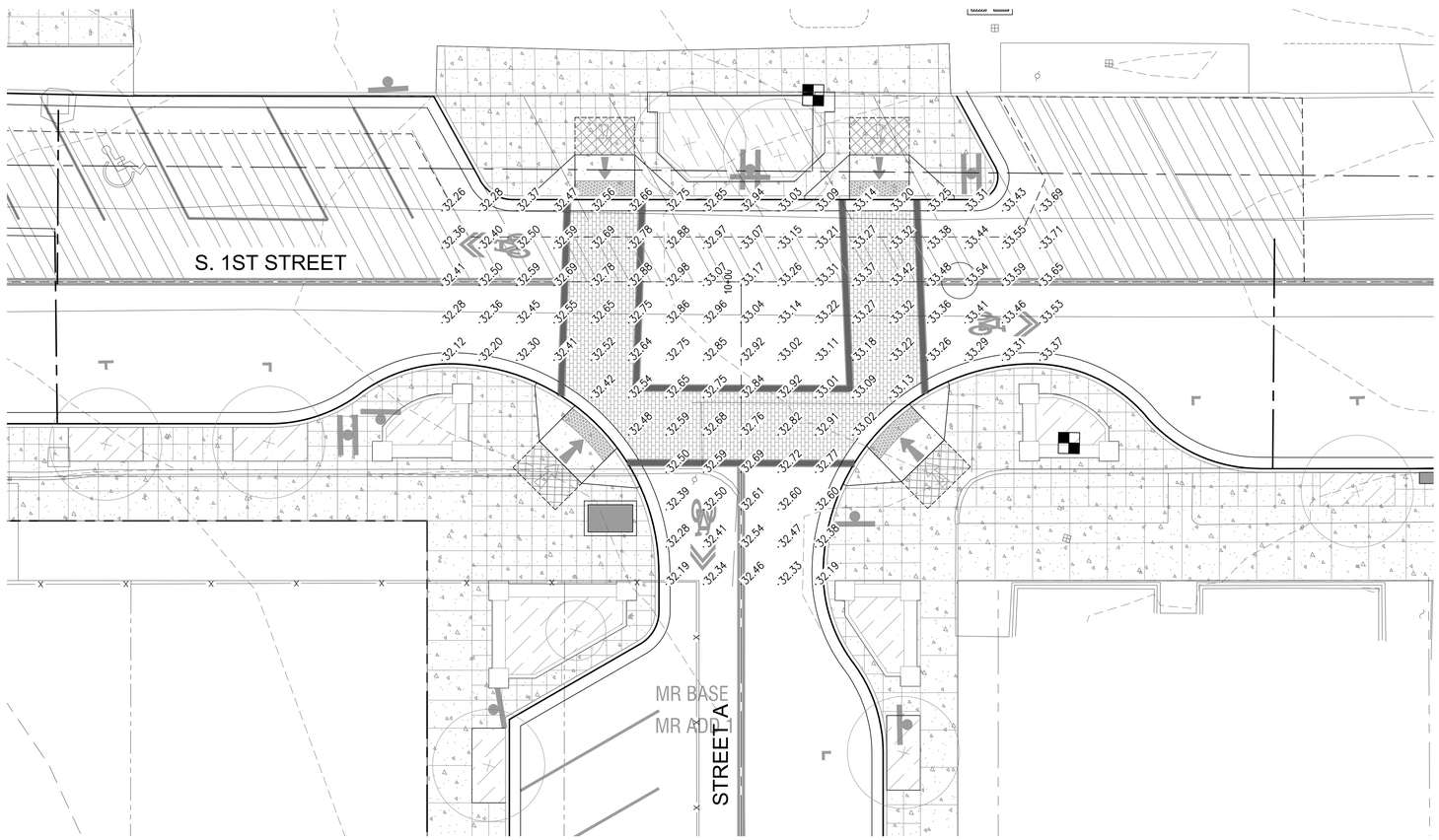

S. 1ST STREET & STREET A

0 10 20
SCALE IN FEET

City of St. Helens
FOUNDED 1850

REGISTERED PROFESSIONAL ENGINEER
72,629
OREGON
JUNE 11, 2008
KEITH BUISMAN
PRELIMINARY

EXPIRES: 12/31/2023

Otak

Otak, Inc.
808 SW Third Avenue, Ste. 800
Portland, OR 97204
503. 287. 6825
www.otak.com

S. 1ST AND STRAND STREETS ROAD AND UTILITY EXTENSIONS

ST. HELENS, OREGON
INTERSECTION PLANS

S. 1ST STREET & STREET A

TITLE

#	DATE	DESCRIPTION

REVISIONS

NAVD88
DATUM

OTAK CAD — KJB
DRAWN BY — CHECKED BY

90% PLANS
STATUS

JANUARY 10, 2022
DATE

19823
PROJECT NUMBER

© 2021 OTAK, INC.

If this drawing is not 22" x 34", it has been reduced/enlarged. Scale accordingly.

Plotted: Jan 10, 2022 - 6:20pm keith.buisman L:\Project\19800\19823\CADD\ACAD\Dwg\C19823CG.dwg Layout Name: 2C-2

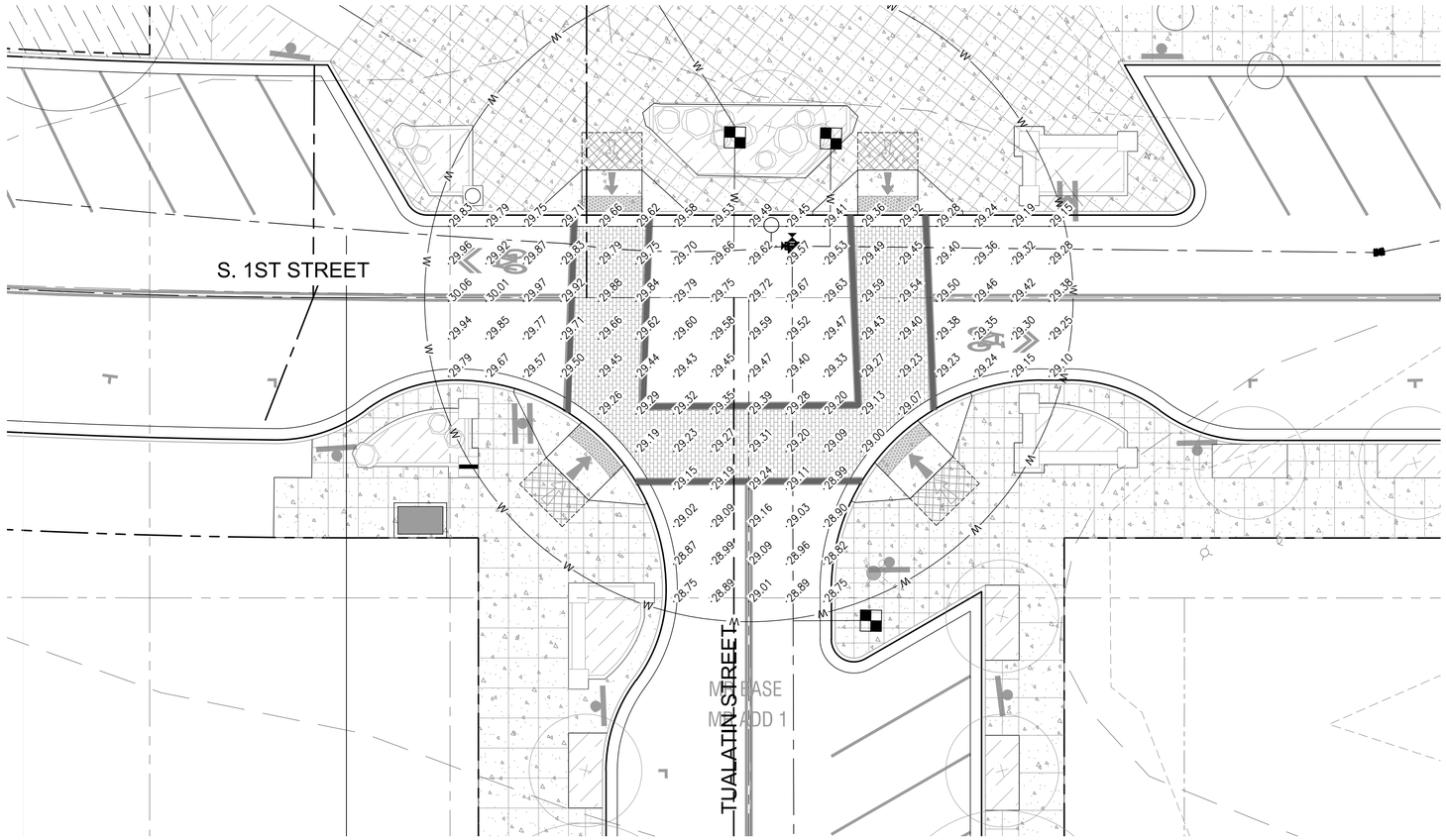

S. 1ST STREET & TUALATIN STREET

0 10 20
SCALE IN FEET

City of St. Helens
FOUNDED 1850

REGISTERED PROFESSIONAL ENGINEER
72,629
OREGON
JUNE 11, 2008
KEITH BUISMAN
PRELIMINARY
EXPIRES: 12/31/2023

Otak

Otak, Inc.
808 SW Third Avenue, Ste. 800
Portland, OR 97204
503. 287. 6825
www.otak.com

S. 1ST AND STRAND STREETS ROAD AND UTILITY EXTENSIONS

ST. HELENS, OREGON
INTERSECTION PLANS

S. 1ST STREET & TUALATIN STREET

TITLE

#	DATE	DESCRIPTION

REVISIONS

NAVD88
DATUM

OTAK CAD
DRAWN BY CHECKED BY

90% PLANS
STATUS

JANUARY 10, 2022
DATE

19823
PROJECT NUMBER

2G-1

© 2021 OTAK, INC.

If this drawing is not 22" x 34", it has been reduced/enlarged. Scale accordingly.

Plotted: Jan 10, 2022 - 6:20pm keith.buisman L:\Project\19800\19823\CADD\ACAD\Dwg\C19823\2G-2.dwg Layout Name: 2G-1

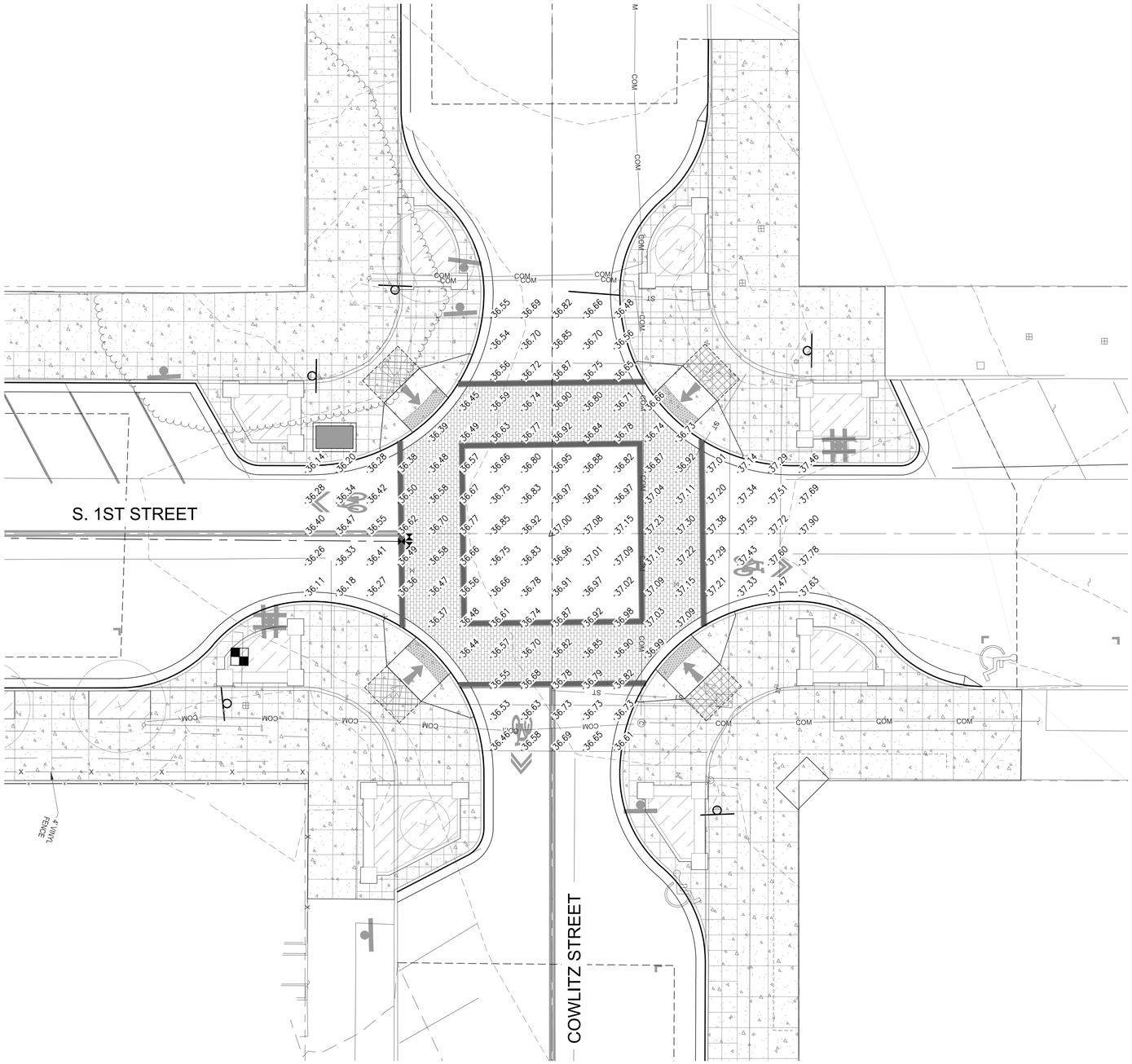

S. 1ST STREET & COWLITZ STREET

0 10 20
SCALE IN FEET

City of St. Helens
FOUNDED 1850

REGISTERED PROFESSIONAL ENGINEER
72,629
OREGON
JUNE 11, 2008
KEITH BUISMAN
PRELIMINARY
EXPIRES: 12/31/2023

Otak

Otak, Inc.
808 SW Third Avenue, Ste. 800
Portland, OR 97204
503. 287. 6825
www.otak.com

S. 1ST AND STRAND STREETS ROAD AND UTILITY EXTENSIONS

ST. HELENS, OREGON
INTERSECTION PLANS

S. 1ST STREET & COWLITZ STREET

TITLE

#	DATE	DESCRIPTION

REVISIONS

NAVD88
DATUM

OTAK CAD — KJB
DRAWN BY — CHECKED BY

90% PLANS
STATUS

JANUARY 10, 2022
DATE

19823
PROJECT NUMBER

2G-3

© 2021 OTAK, INC.

If this drawing is not 22" x 34", it has been reduced/enlarged. Scale accordingly.

Plotted: Jan 10, 2022 - 6:20pm keith.buisman L:\Projects\19800\19823\CADD\ACAD\Dwg\C19823CG.dwg Layout Name: 2G-3

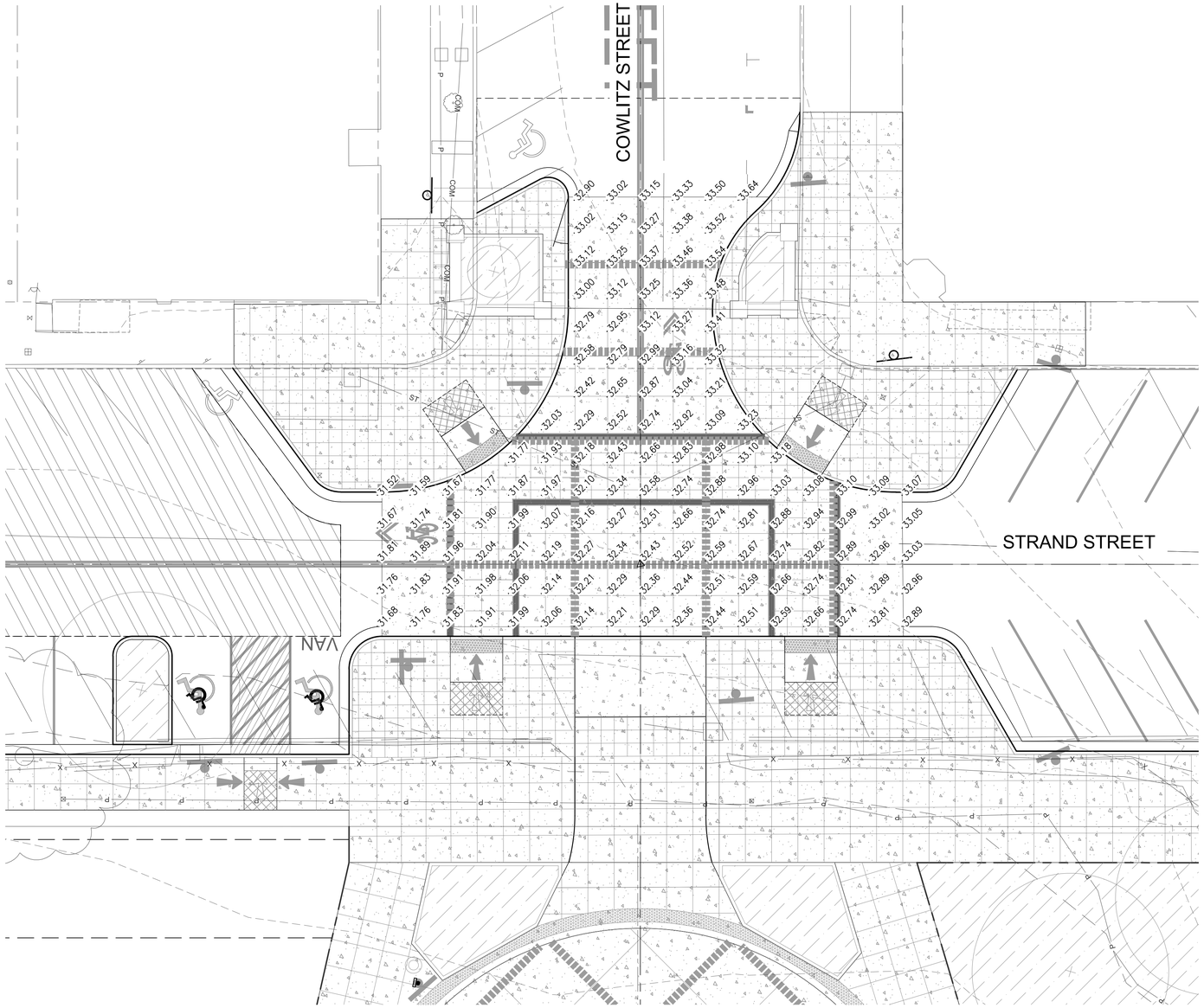

STRAND STREET & COWLITZ STREET

0 10 20
SCALE IN FEET

City of St. Helens
FOUNDED 1850

REGISTERED PROFESSIONAL ENGINEER
72,629
OREGON
JUNE 11, 2008
KEITH BUISMAN
PRELIMINARY
EXPIRES: 12/31/2023

Otak

Otak, Inc.
808 SW Third Avenue, Ste. 800
Portland, OR 97204
503. 287. 6825
www.otak.com

S. 1ST AND STRAND STREETS ROAD AND UTILITY EXTENSIONS

ST. HELENS, OREGON
INTERSECTION PLANS

STRAND STREET & COWLITZ STREET

TITLE

#	DATE	DESCRIPTION

REVISIONS

NAVD88
DATUM

OTAK CAD — KJB
DRAWN BY — CHECKED BY

90% PLANS
STATUS

JANUARY 10, 2022
DATE

19823
PROJECT NUMBER

2G-4

© 2021 OTAK, INC.

If this drawing is not 22" x 34", it has been reduced/enlarged. Scale accordingly.

Plotted: Jan 10, 2022 - 5:21pm keith.buisman L:\Project\18800\19823\CADD\ACAD\Dwg\C19823CIG.dwg Layout Name: 2G-4

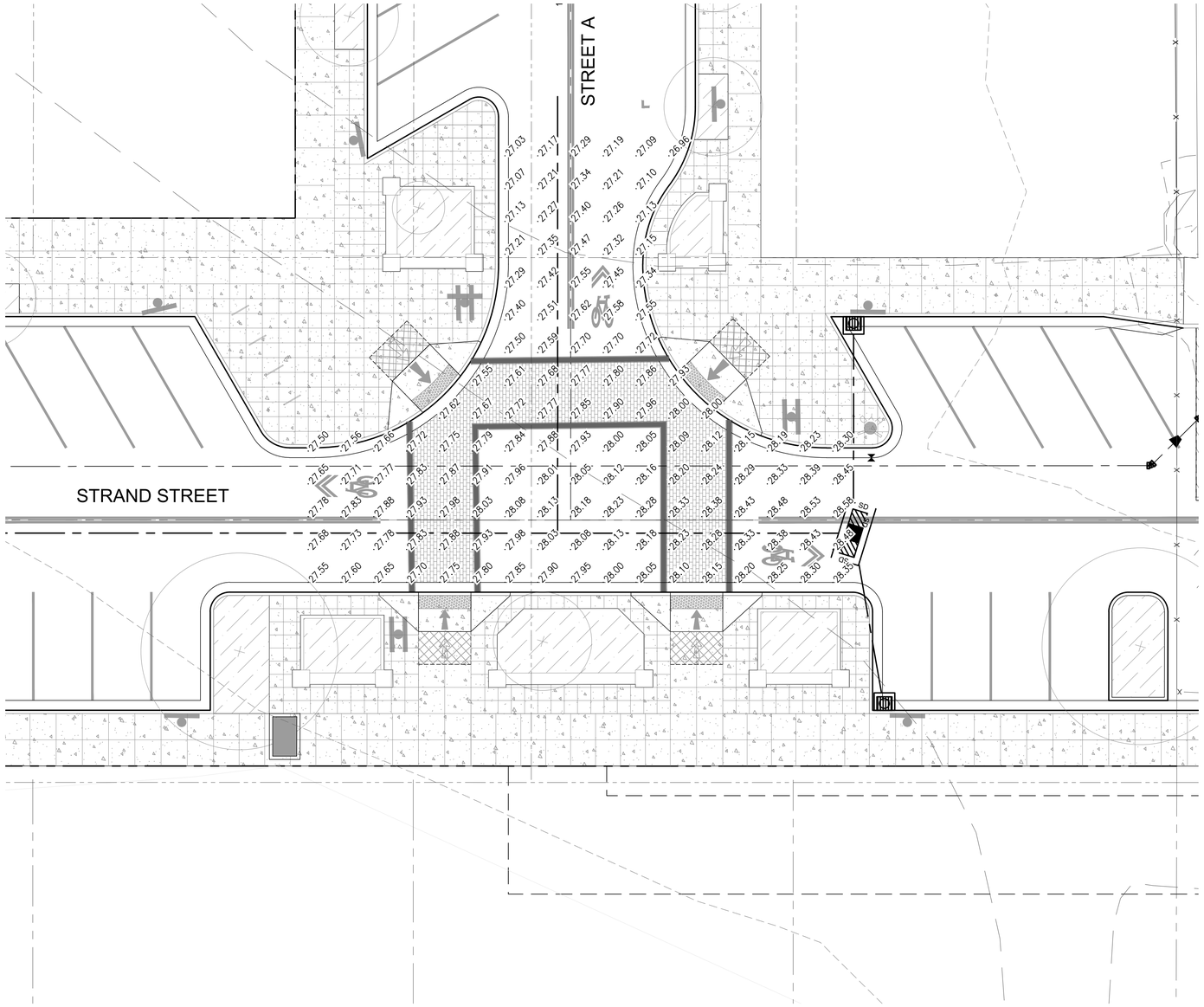

STRAND STREET & STREET A

0 10 20
SCALE IN FEET

City of St. Helens
FOUNDED 1850

REGISTERED PROFESSIONAL ENGINEER
72,629
OREGON
JUNE 11, 2008
KEITH BUISMAN
PRELIMINARY
EXPIRES: 12/31/2023

Otak

Otak, Inc.
808 SW Third Avenue, Ste. 800
Portland, OR 97204
503. 287. 6825
www.otak.com

S. 1ST AND STRAND STREETS ROAD AND UTILITY EXTENSIONS

ST. HELENS, OREGON
INTERSECTION PLANS

STRAND STREET & STREET A

TITLE

#	DATE	DESCRIPTION

REVISIONS

NAVD88
DATUM

OTAK CAD — KJB
DRAWN BY — CHECKED BY

90% PLANS
STATUS

JANUARY 10, 2022
DATE

19823
PROJECT NUMBER

2G-5

© 2021 OTAK, INC.

If this drawing is not 22" x 34", it has been reduced/enlarged. Scale accordingly.

Plotted: Jan 10, 2022 - 6:21pm keith.buisman L:\Project\19800\19823\CADD\ACAD\Dwg\C19823\C2G.dwg Layout Name: 2G-5

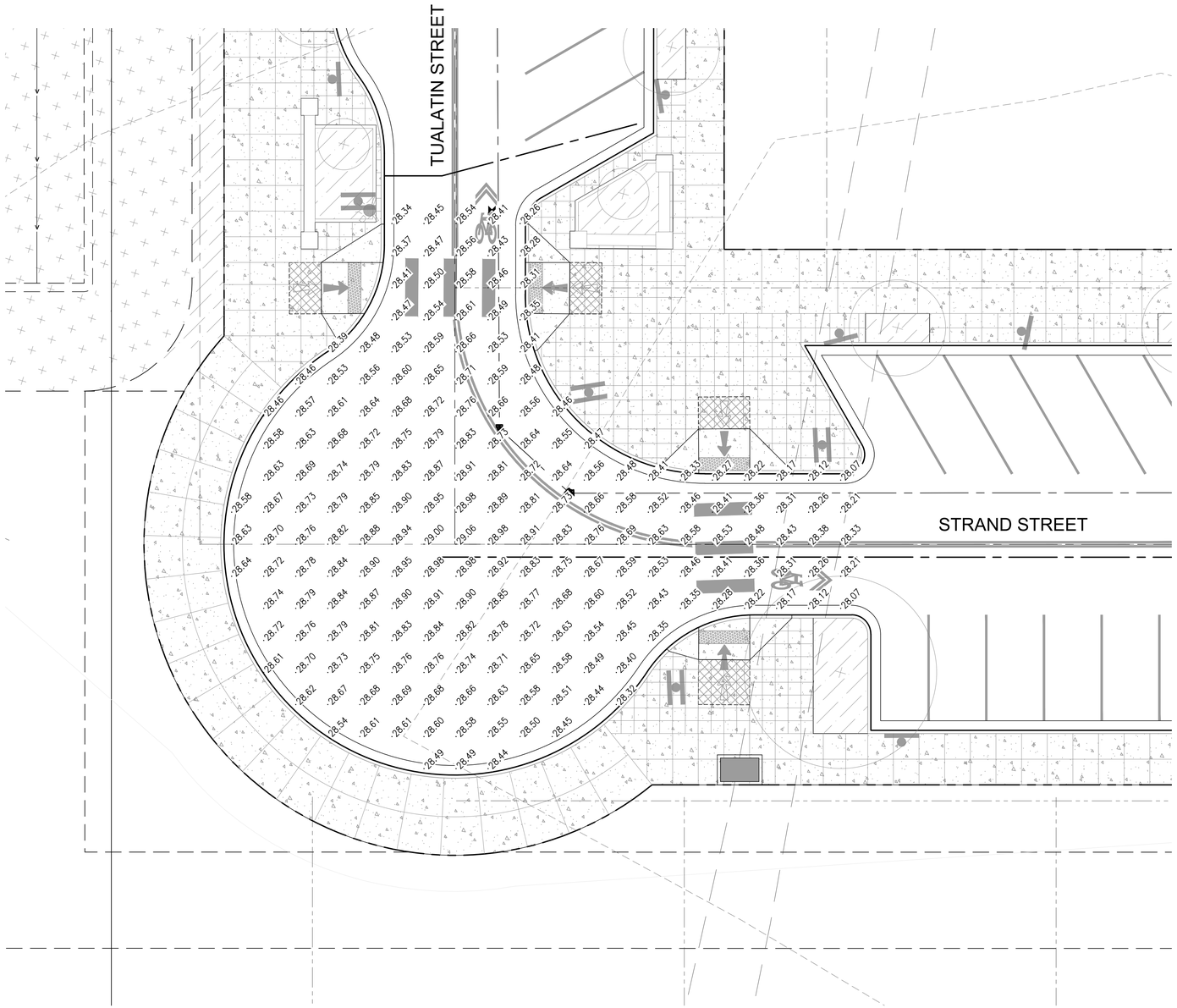

STRAND STREET & TUALATIN STREET

0 10 20
SCALE IN FEET

City of St. Helens
FOUNDED 1850

REGISTERED PROFESSIONAL ENGINEER
72,629
OREGON
JUNE 11, 2008
KEITH BUISMAN
PRELIMINARY
EXPIRES: 12/31/2023

Otak

Otak, Inc.
808 SW Third Avenue, Ste. 800
Portland, OR 97204
503. 287. 6825
www.otak.com

S. 1ST AND STRAND STREETS ROAD AND UTILITY EXTENSIONS

ST. HELENS, OREGON
INTERSECTION PLANS

STRAND STREET & TUALATIN STREET

TITLE

#	DATE	DESCRIPTION

REVISIONS

NAVD88
DATUM

OTAK CAD — KJB
DRAWN BY — CHECKED BY

90% PLANS
STATUS

JANUARY 10, 2022
DATE

19823
PROJECT NUMBER

2G-6

© 2021 OTAK, INC.

If this drawing is not 22" x 34", it has been reduced/enlarged. Scale accordingly.

Plotted: Jan 10, 2022 - 6:21am keith.buisman L:\Project\19800\19823\CADD\ACAD\Dwg\C19823G2G.dwg Layout Name: 2G-6

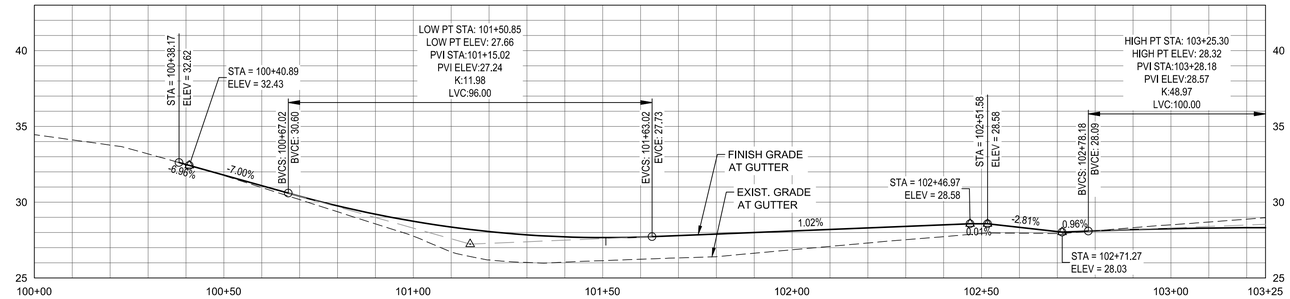

S. 1ST STREET LT CURB PROFILE STA 100+00 - 103+25

HORZ 0 20 40
VERT 0 5 10
SCALE IN FEET

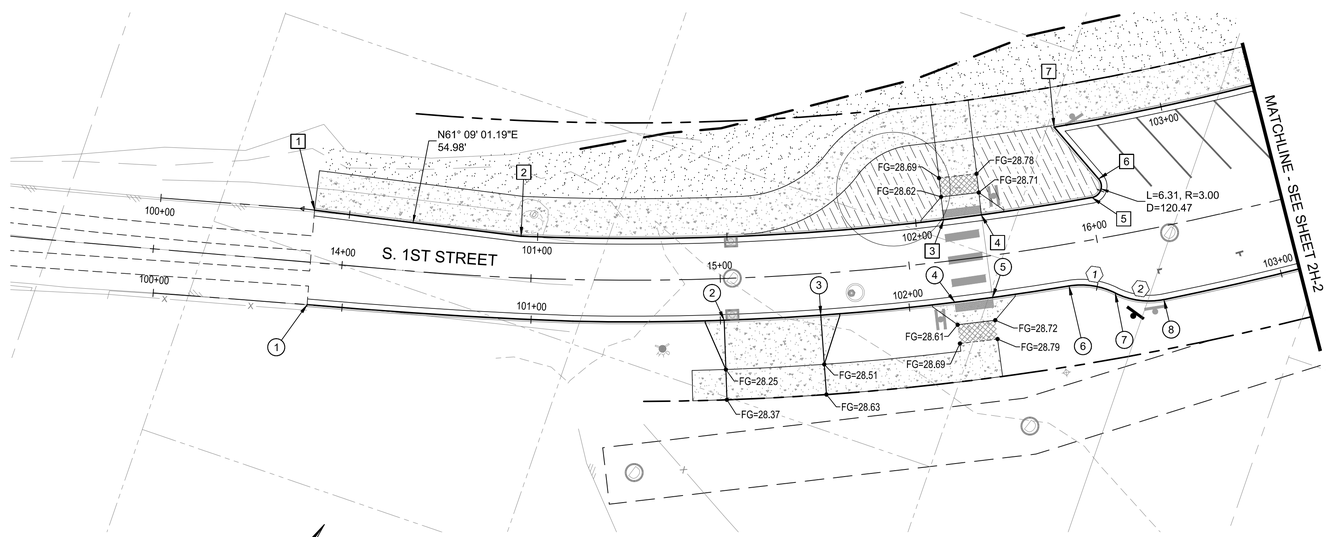

S. 1ST STREET STA 13+25 TO 16+50

0 20 40
SCALE IN FEET

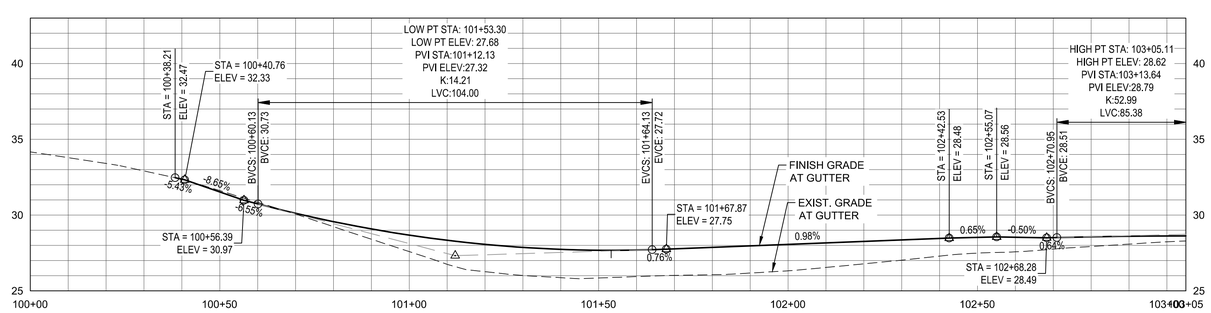

S. 1ST STREET RT CURB PROFILE STA 100+00 - 103+05

HORZ 0 20 40
VERT 0 5 10
SCALE IN FEET

CURB KEYPOINT ELEVATIONS

LOCATION	CURB STATION	ROAD CL STATION	ROAD CL OFFSET	GUTTER ELEV
1	100+40.67	13+91.52	13.82'LT	32.44
2	100+95.66	14+46.96	11.00'LT	28.94
3	102+07.41	15+60.49	11.00'LT	28.18
4	102+17.41	15+70.66	11.00'LT	28.28
5	102+46.97	16+00.68	11.00'LT	28.58
6	102+53.28	16+03.33	15.52'LT	28.53
7	102+71.27	15+93.84	31.00'LT	28.03

CURB KEYPOINT ELEVATIONS

LOCATION	CURB STATION	ROAD CL STATION	ROAD CL OFFSET	GUTTER ELEV
1	100+40.75	13+91.73	11.18'RT	32.33
2	101+50.98	15+00.64	11.00'RT	27.68
3	101+76.54	15+25.79	11.00'RT	27.83
4	102+12.10	15+60.81	11.00'RT	28.18
5	102+22.10	15+70.66	11.00'RT	28.28
6	102+42.53	15+90.76	11.00'RT	28.48
6	102+55.07	16+02.25	14.90'RT	28.56
7	102+68.28	16+14.27	19.00'RT	28.49

CURB RETURN CURVE DATA

NO.	STATION & OFFSET	CURVE
1	BCR= S 1ST ST 15+90.76 11.00 R . . . ECR= 16+02.25 14.90 R S 1ST ST	D = 35°55'08" R = 20.00 T = 6.48 L = 12.54
2	BCR= S 1ST ST 16+02.25 14.90 R . . . ECR= 16+14.27 19.00 R S 1ST ST	D = 37°50'33" R = 20.00 T = 6.86 L = 13.21

City of St. Helens FOUNDED 1850

REGISTERED PROFESSIONAL ENGINEER 72,629 OREGON JUNE 11, 2008 KEITH BUISMAN
PRELIMINARY
EXPIRES: 12/31/2023

Otak

Otak, Inc.
808 SW Third Avenue, Ste. 800
Portland, OR 97204
503. 287. 6825
www.otak.com

S. 1ST AND STRAND STREETS ROAD AND UTILITY EXTENSIONS

ST. HELENS, OREGON
PARKING CURB PLANS

S. 1ST STREET PARKING CURB PLAN

TITLE

#	DATE	DESCRIPTION

REVISIONS

NAVD88
DATUM

OTAK CAD — KJB
DRAWN BY — CHECKED BY

90% PLANS
STATUS

JANUARY 10, 2022
DATE

19823
PROJECT NUMBER

2H-1

© 2021 OTAK, INC.

If this drawing is not 22" x 34", it has been reduced/enlarged. Scale accordingly.

Plotted: Jan 10, 2022 - 6:37am keith.buisman L:\Project\19800\19823\CADD\ACAD\Dwg\C19823C2H.dwg Layout Name: 2H-1

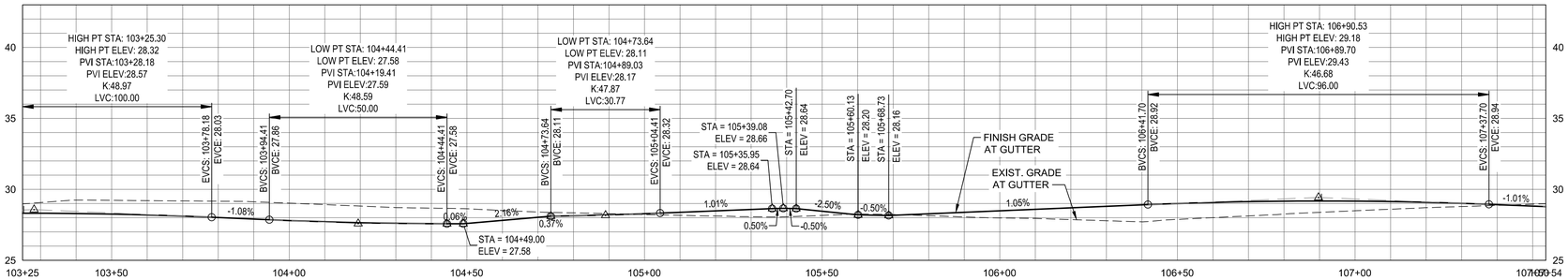

S. 1ST STREET LT CURB PROFILE STA 103+25 - 107+54

HORZ 0 20 40
VERT 0 5 10
SCALE IN FEET

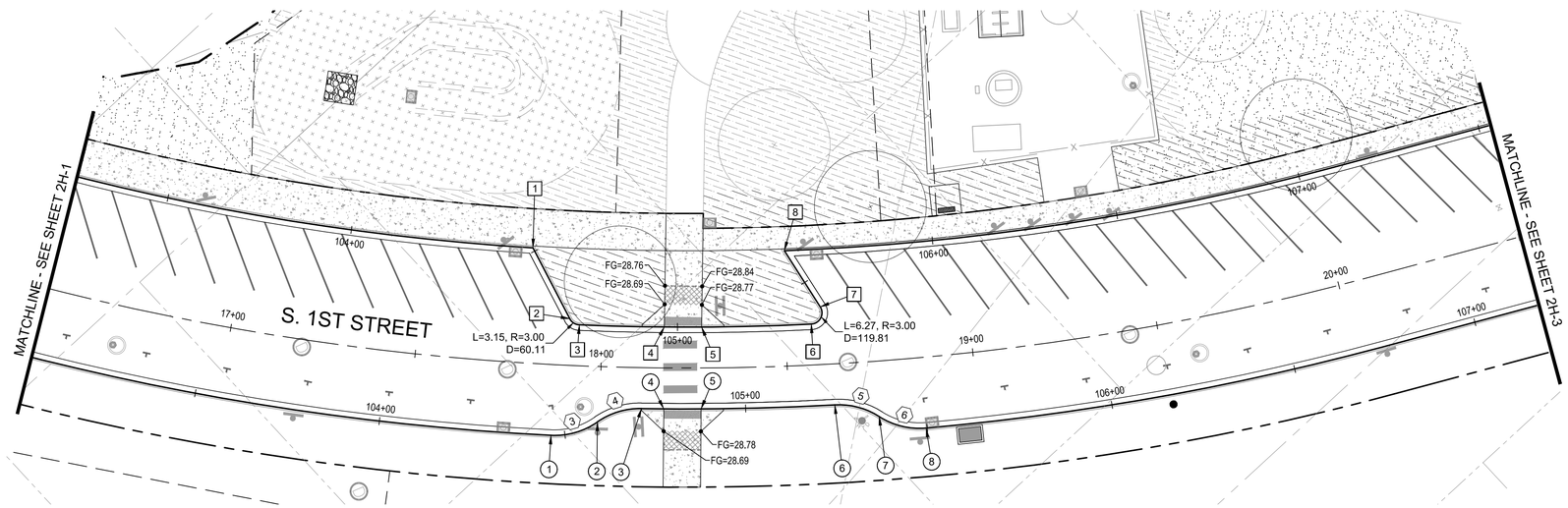

S. 1ST STREET STA 16+50 TO 20+50

0 20 40
SCALE IN FEET

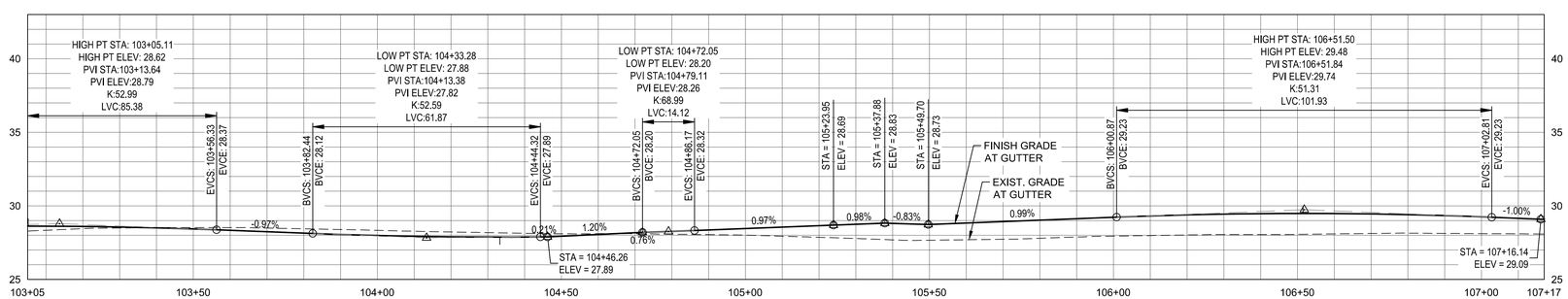

S. 1ST STREET RT CURB PROFILE STA 103+05 - 107+17

HORZ 0 20 40
VERT 0 5 10
SCALE IN FEET

CURB KEYPOINT ELEVATIONS

LOCATION	CURB STATION	ROAD CL STATION	ROAD CL OFFSET	GUTTER ELEV
1	104+49.00	17+79.81	31.00'LT	27.58
2	104+70.49	17+91.09	12.50'LT	28.04
3	104+73.64	17+93.73	11.00'LT	28.11
4	104+96.45	18+16.91	11.00'LT	28.25
5	105+06.45	18+27.07	11.00'LT	28.34
6	105+35.95	18+57.04	11.00'LT	28.64
7	105+42.22	18+59.70	15.49'LT	28.64
8	105+60.13	18+50.45	31.00'LT	28.20

CURB KEYPOINT ELEVATIONS

LOCATION	CURB STATION	ROAD CL STATION	ROAD CL OFFSET	GUTTER ELEV
1	104+46.26	17+87.54	19.00'RT	27.89
2	104+59.47	17+99.56	14.90'RT	28.05
3	104+72.03	18+11.07	11.00'RT	28.20
4	104+78.03	18+16.98	11.00'RT	28.25
5	104+88.03	18+26.82	11.00'RT	28.34
6	105+23.95	18+62.19	11.00'RT	28.69
7	105+36.49	18+73.68	14.90'RT	28.81
8	105+49.70	18+85.69	19.00'RT	28.73

CURB RETURN CURVE DATA

NO.	STATION & OFFSET	CURVE
3	BCR= S 1ST ST 17+87.54 19.00 R . . ECR= 17+99.56 14.90 R S 1ST ST	D = 37°50'33" R = 20.00 T = 6.86 L = 13.21
4	BCR= S 1ST ST 17+99.56 14.90 R . . ECR= 18+11.07 11.00 R S 1ST ST	D = 35°59'22" R = 20.00 T = 6.50 L = 12.56
5	BCR= S 1ST ST 18+62.19 11.00 R . . ECR= 18+73.68 14.90 R S 1ST ST	D = 35°55'08" R = 20.00 T = 6.48 L = 12.54
6	BCR= S 1ST ST 18+73.68 14.90 R . . ECR= 18+85.69 19.00 R S 1ST ST	D = 37°49'27" R = 20.00 T = 6.85 L = 13.20

City of St. Helens FOUNDED 1850

REGISTERED PROFESSIONAL ENGINEER 72,629 OREGON JUNE 11, 2009 KEITH BUISMAN
PRELIMINARY
EXPIRES: 12/31/2023

Otak
Otak, Inc.
808 SW Third Avenue, Ste. 800
Portland, OR 97204
503. 287. 6825
www.otak.com

S. 1ST AND STRAND STREETS ROAD AND UTILITY EXTENSIONS

ST. HELENS, OREGON
PARKING CURB PLANS

S. 1ST STREET PARKING CURB PLAN

TITLE

#	DATE	DESCRIPTION

REVISIONS

NAVD88
DATUM

OTAK CAD — KJB
DRAWN BY — CHECKED BY

90% PLANS
STATUS

JANUARY 10, 2022
DATE

19823
PROJECT NUMBER

2H-2

© 2021 OTAK, INC.

If this drawing is not 22" x 34", it has been reduced/enlarged. Scale accordingly.

Plotted: Jan 10, 2022 - 6:38am keith.buisman L:\Projects\19800\19823\CADD\ACAD\Dwg\C19823H.dwg Layout Name: 2H-2

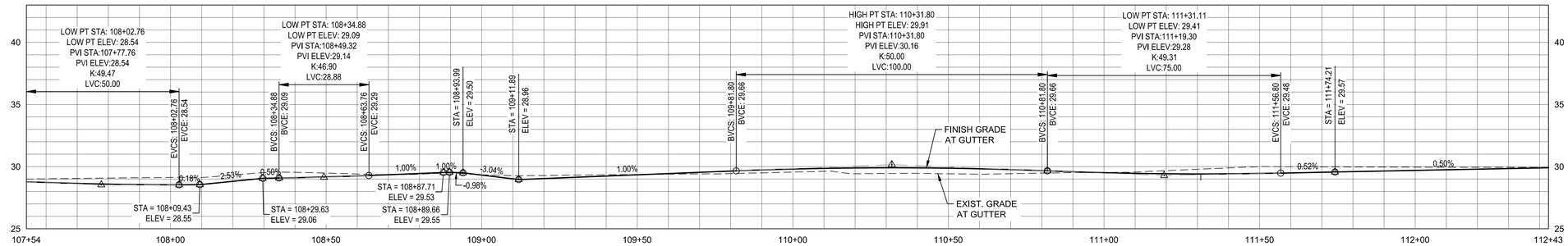

S. 1ST STREET LT CURB PROFILE STA 107+54 - 112+43

HORZ 0 20 40
VERT 0 5 10
SCALE IN FEET

CURB RETURN CURVE DATA		
NO.	STATION & OFFSET	CURVE
7	BCR= S 1ST ST 21+03.79 19.00 R ECR= 21+15.79 15.00 R S 1ST ST	D = 36°52'12" R = 20.00 T = 6.67 L = 12.87
8	BCR= S 1ST ST 21+15.79 15.00 R ECR= 21+27.79 11.00 R S 1ST ST	D = 36°52'12" R = 20.00 T = 6.67 L = 12.87
9	BCR= S 1ST ST 21+55.20 11.00 R ECR= 21+67.20 15.00 R S 1ST ST	D = 36°52'12" R = 20.00 T = 6.67 L = 12.87
10	BCR= S 1ST ST 21+67.20 15.00 R ECR= 21+79.20 19.00 R S 1ST ST	D = 36°52'12" R = 20.00 T = 6.67 L = 12.87

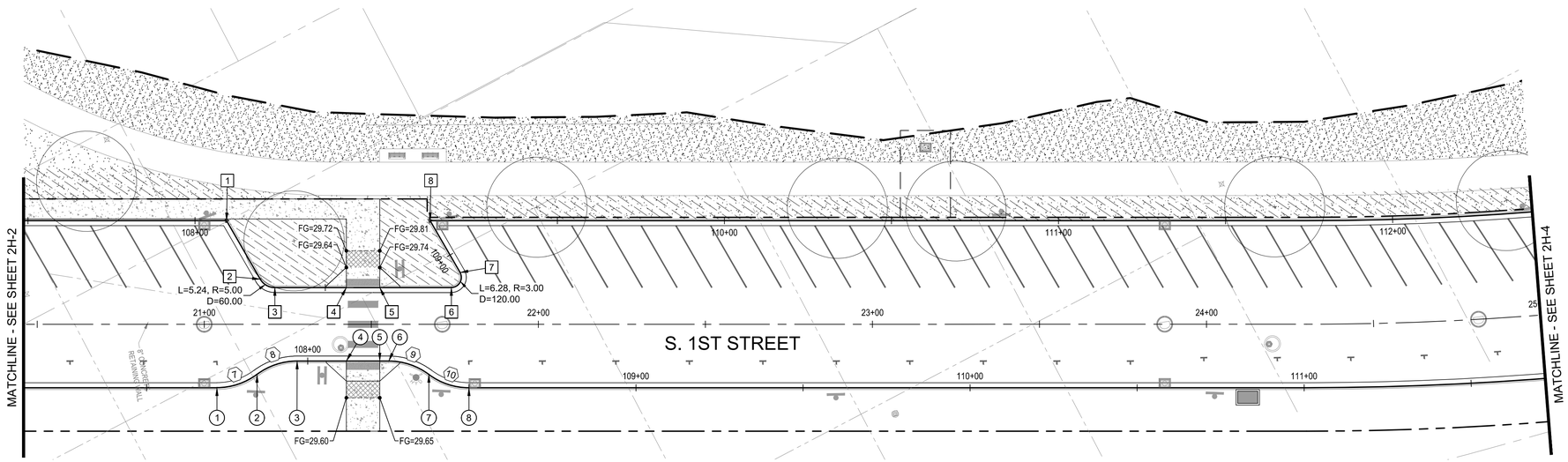

S. 1ST STREET STA 20+50 TO 25+00

0 20 40
SCALE IN FEET

CURB KEYPOINT ELEVATIONS				
LOCATION	CURB STATION	ROAD CL STATION	ROAD CL OFFSET	GUTTER ELEV
1	108+09.43	21+06.67	31.00'LT	28.55
2	108+29.63	21+16.77	13.50'LT	29.06
3	108+34.87	21+21.10	11.00'LT	29.09
4	108+56.29	21+42.52	11.00'LT	29.22
5	108+66.29	21+52.52	11.00'LT	29.31
6	108+87.71	21+73.95	11.00'LT	29.53
7	108+93.99	21+76.54	15.50'LT	29.50
8	109+11.89	21+67.59	31.00'LT	28.96

CURB KEYPOINT ELEVATIONS				
LOCATION	CURB STATION	ROAD CL STATION	ROAD CL OFFSET	GUTTER ELEV
1	107+71.09	21+03.79	19.00'RT	28.83
2	107+83.96	21+15.79	15.00'RT	28.97
3	107+96.83	21+27.79	11.00'RT	29.11
4	108+11.56	21+42.52	11.00'RT	29.21
5	108+21.56	21+52.52	11.00'RT	29.31
6	108+24.23	21+55.20	11.00'RT	29.33
7	108+37.11	21+67.20	15.00'RT	29.44
8	108+49.98	21+79.20	19.00'RT	29.37

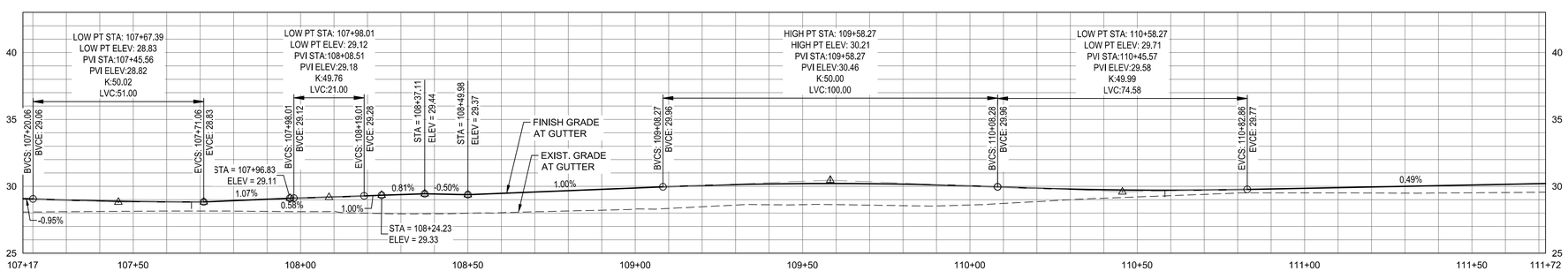

S. 1ST STREET RT CURB PROFILE STA 107+17 - 111+72

HORZ 0 20 40
VERT 0 5 10
SCALE IN FEET

City of St. Helens FOUNDED 1850

REGISTERED PROFESSIONAL ENGINEER 72,629 OREGON JUNE 11, 2008 KEITH BUISMAN
PRELIMINARY
EXPIRES: 12/31/2023

Otak

Otak, Inc.
808 SW Third Avenue, Ste. 800
Portland, OR 97204
503. 287. 6825
www.otak.com

S. 1ST AND STRAND STREETS ROAD AND UTILITY EXTENSIONS

ST. HELENS, OREGON
PARKING CURB PLANS

S. 1ST STREET PARKING CURB PLAN

TITLE

#	DATE	DESCRIPTION

REVISIONS

NAVD88
DATUM

OTAK CAD — KJB
DRAWN BY — CHECKED BY

90% PLANS
STATUS

JANUARY 10, 2022
DATE

19823
PROJECT NUMBER

2H-3

© 2021 OTAK, INC.

If this drawing is not 22" x 34", it has been reduced/enlarged. Scale accordingly.

Plotted: Jan 10, 2022 - 6:38pm keith.buisman I:\Projects\19800\19823\CADD\ACAD\Dwgs\C19823H2H.dwg Layout Name: 2H-3

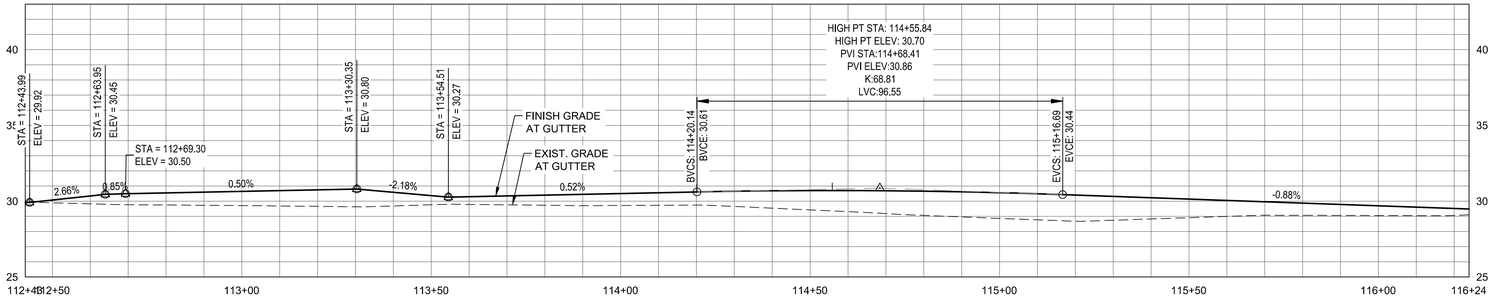

S. 1ST STREET LT CURB PROFILE STA 112+43 - 116+24

HORZ 0 20 40
VERT 0 5 10
SCALE IN FEET

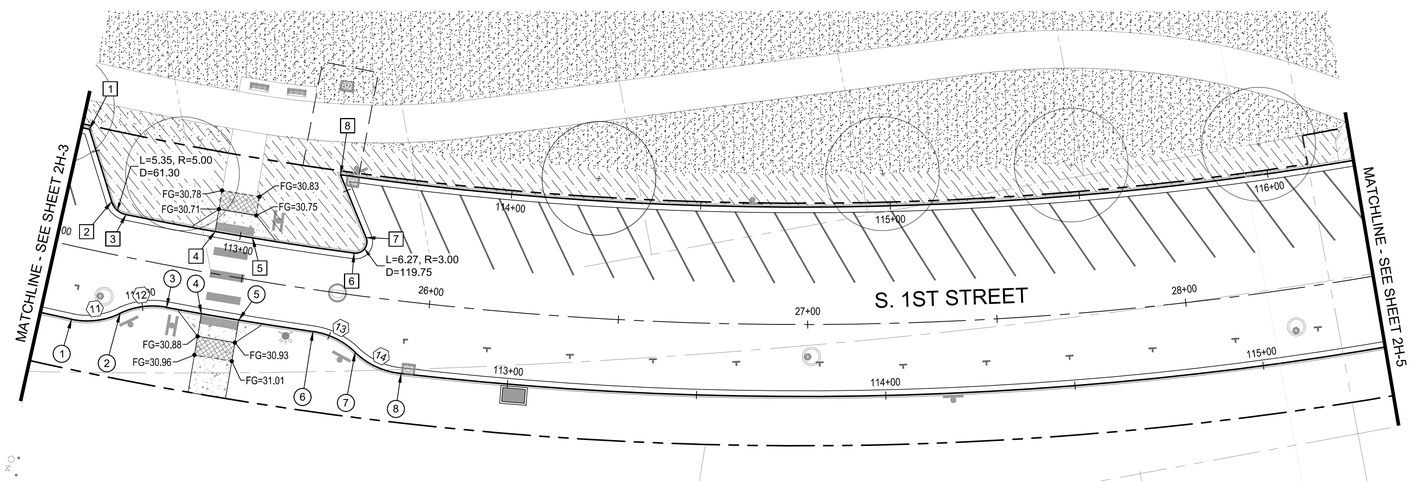

S. 1ST STREET STA 25+00 TO 28+50

0 20 40
SCALE IN FEET

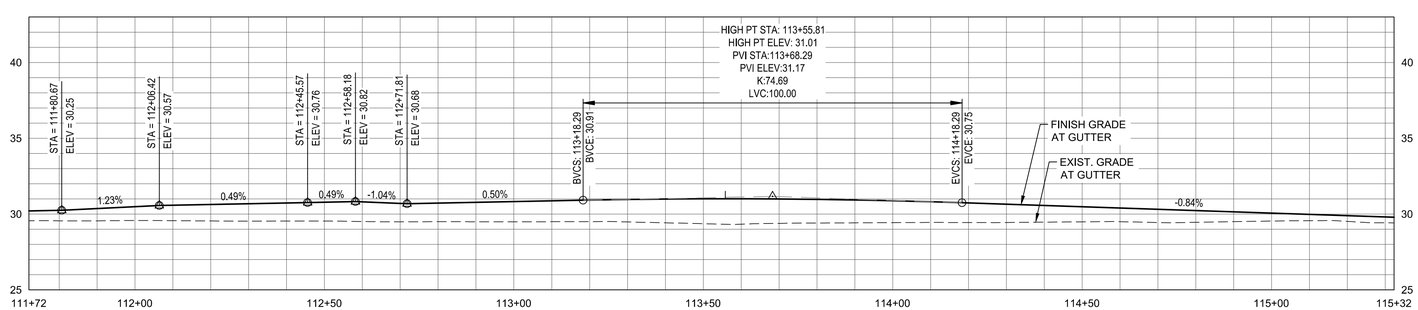

S. 1ST STREET RT CURB PROFILE STA 112+72 - 115+32

HORZ 0 20 40
VERT 0 5 10
SCALE IN FEET

CURB KEYPOINT ELEVATIONS

LOCATION	CURB STATION	ROAD CL STATION	ROAD CL OFFSET	GUTTER ELEV
1	112+43.99	25+02.18	31.00'LT	29.92
2	112+63.95	25+12.20	13.59'LT	30.45
3	112+69.30	25+16.65	11.00'LT	30.50
4	112+93.25	25+40.89	11.00'LT	30.61
5	113+03.25	25+51.01	11.00'LT	30.66
6	113+30.35	25+78.45	11.00'LT	30.80
7	113+36.62	25+81.10	15.48'LT	30.66
8	113+54.51	25+71.95	31.00'LT	30.27

CURB KEYPOINT ELEVATIONS

LOCATION	CURB STATION	ROAD CL STATION	ROAD CL OFFSET	GUTTER ELEV
1	111+80.67	25+08.25	19.00'RT	30.25
2	111+93.81	25+20.26	14.92'RT	30.41
3	112+06.42	25+31.86	11.00'RT	30.57
4	112+15.74	25+41.07	11.03'RT	30.61
5	112+25.74	25+50.95	11.00'RT	30.66
6	112+45.57	25+70.54	11.00'RT	30.76
7	112+58.18	25+82.14	14.92'RT	30.82
8	112+71.81	25+94.63	19.00'RT	30.68

CURB RETURN CURVE DATA

NO.	STATION & OFFSET	CURVE
11	BCR= S 1ST ST 25+08.25 19.00 R ECR= 25+20.26 14.92 R S 1ST ST	D = 37°37'41" R = 20.00 T = 6.81 L = 13.13
12	BCR= S 1ST ST 25+20.26 14.92 R ECR= 25+31.86 11.00 R S 1ST ST	D = 36°07'30" R = 20.00 T = 6.52 L = 12.61
13	BCR= S 1ST ST 25+70.54 11.00 R ECR= 25+82.14 14.92 R S 1ST ST	D = 36°08'19" R = 20.00 T = 6.53 L = 12.61
14	BCR= S 1ST ST 25+82.14 14.92 R ECR= 25+94.63 19.00 R S 1ST ST	D = 39°02'40" R = 20.00 T = 7.09 L = 13.63

City of St. Helens FOUNDED 1850

REGISTERED PROFESSIONAL ENGINEER 72,629 OREGON JUNE 11, 2008 KEITH BUISMAN
PRELIMINARY
EXPIRES: 12/31/2023

Otak
Otak, Inc.
808 SW Third Avenue, Ste. 800
Portland, OR 97204
503. 287. 6825
www.otak.com

S. 1ST AND STRAND STREETS ROAD AND UTILITY EXTENSIONS

ST. HELENS, OREGON
PARKING CURB PLANS

S. 1ST STREET PARKING CURB PLAN

TITLE

#	DATE	DESCRIPTION

REVISIONS

NAVD88
DATUM

OTAK CAD — DRAWN BY
KJB — CHECKED BY

90% PLANS
STATUS

JANUARY 10, 2022
DATE

19823
PROJECT NUMBER

2H-4

© 2021 OTAK, INC.

If this drawing is not 22" x 34", it has been reduced/enlarged. Scale accordingly.

Plotted: Jan 10, 2022 - 6:38pm keith.buisman I:\Project\19800\19823\CADD\ACAD\Dwg\C19823-2H.dwg Layout Name: 2H-4

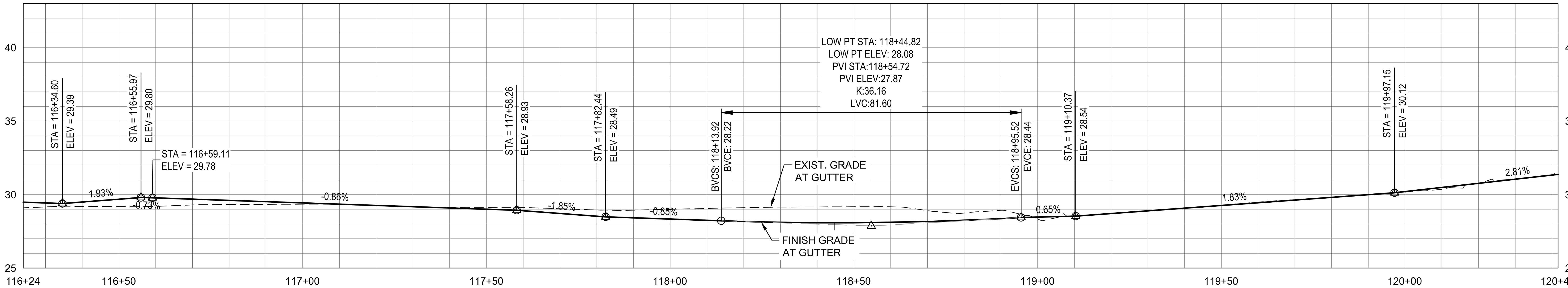

S. 1ST STREET LT CURB PROFILE STA 116+24 - 120+42

HORZ 0 20 40
VERT 0 5 10
SCALE IN FEET

CURB KEYPOINT ELEVATIONS				
LOCATION	CURB STATION	ROAD CL STATION	ROAD CL OFFSET	GUTTER ELEV
1	116+34.60	28+62.04	31.00'LT	29.39
2	116+55.97	28+72.81	12.50'LT	29.80
3	116+59.11	28+75.41	11.00'LT	29.78
4	116+79.67	28+95.97	11.00'LT	29.61
5	116+87.67	29+03.97	11.00'LT	29.54
6	117+16.40	29+32.70	11.00'LT	29.29
7	117+24.40	29+40.70	11.00'LT	29.22
8	117+58.26	29+74.56	11.00'LT	28.93
9	117+64.54	29+77.15	15.50'LT	28.82
10	117+82.44	29+68.21	31.00'LT	28.49
11	118+96.76	30+82.52	31.00'LT	28.45
12	119+08.18	30+92.50	25.44'LT	28.52

CURB KEYPOINT ELEVATIONS				
LOCATION	CURB STATION	ROAD CL STATION	ROAD CL OFFSET	GUTTER ELEV
1	115+37.93	28+55.25	19.00'RT	29.75
2	116+71.24	29+84.90	19.00'RT	28.64

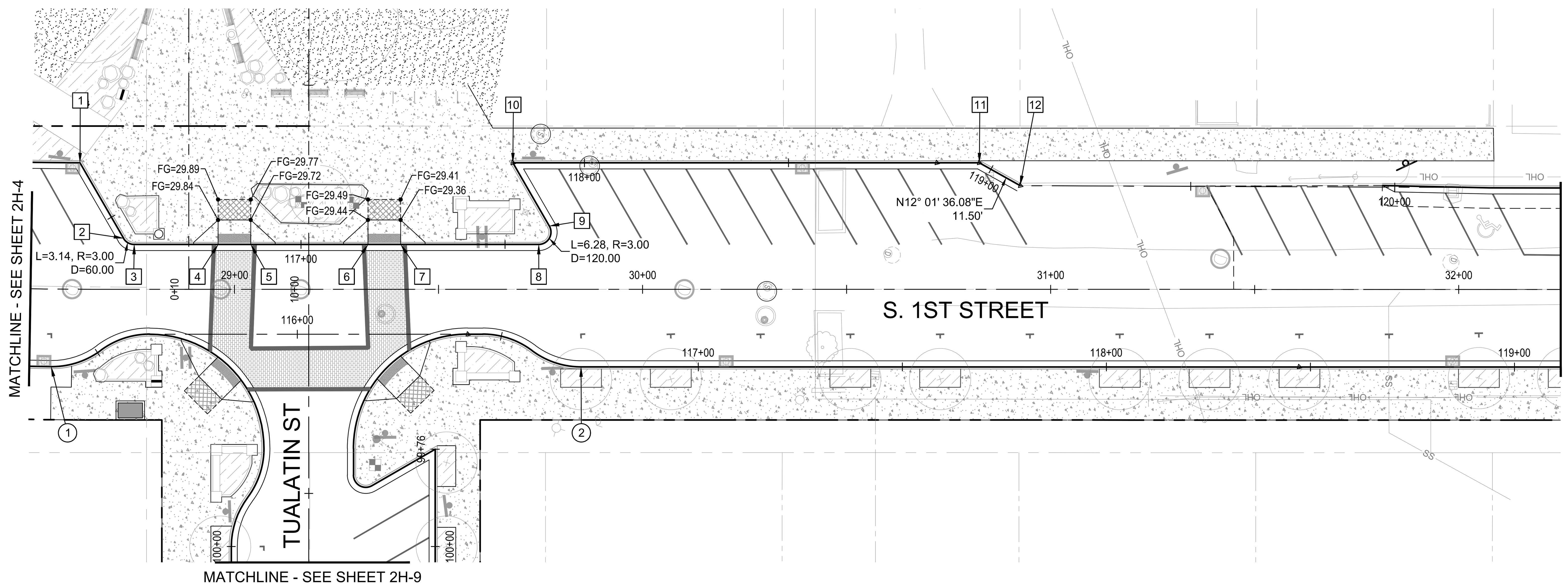

S. 1ST STREET STA 28+50 TO 32+25

0 20 40
SCALE IN FEET

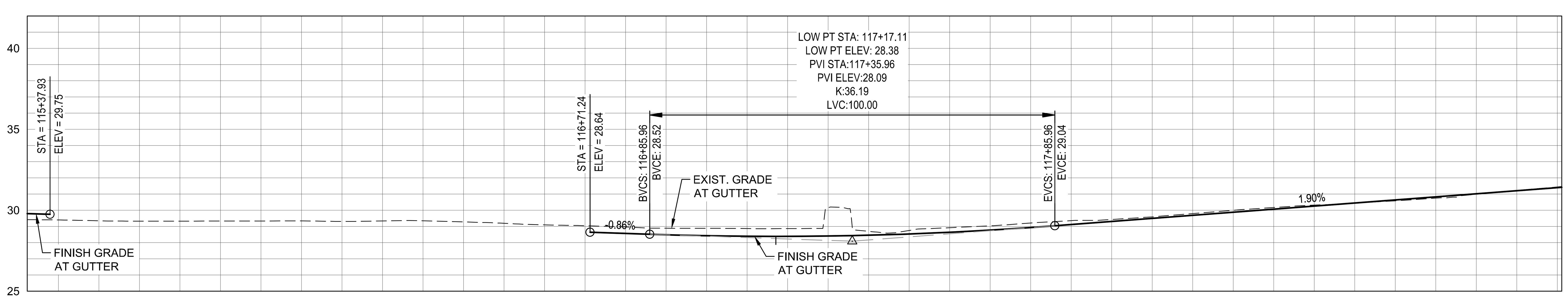

S. 1ST STREET RT CURB PROFILE STA 115+32 - 119+11

HORZ 0 20 40
VERT 0 5 10
SCALE IN FEET

REGISTERED PROFESSIONAL ENGINEER
72,629
PRELIMINARY
OREGON
JUNE 11, 2008
KEITH BUISMAN
EXPIRES: 12/31/2023

Otak, Inc.
808 SW Third Avenue, Ste. 800
Portland, OR 97204
503. 287. 6825
www.otak.com

S. 1ST AND STRAND STREETS ROAD AND UTILITY EXTENSIONS

ST. HELENS, OREGON
PARKING CURB PLANS

S. 1ST STREET PARKING CURB PLAN

TITLE

#	DATE	DESCRIPTION

REVISIONS

NAVD88
DATUM

OTAK CAD — KJB
DRAWN BY — CHECKED BY

90% PLANS
STATUS

JANUARY 10, 2022
DATE

19823
PROJECT NUMBER

2H-5

© 2021 OTAK, INC.
If this drawing is not 22" x 34", it has been reduced/enlarged. Scale accordingly.

Plotted: Jan 10, 2022 - 6:40pm keith.buisman L:\Project\19800\19823\CADD\ACAD\Dwg\C19823C2H.dwg Layout Name: 2H-5

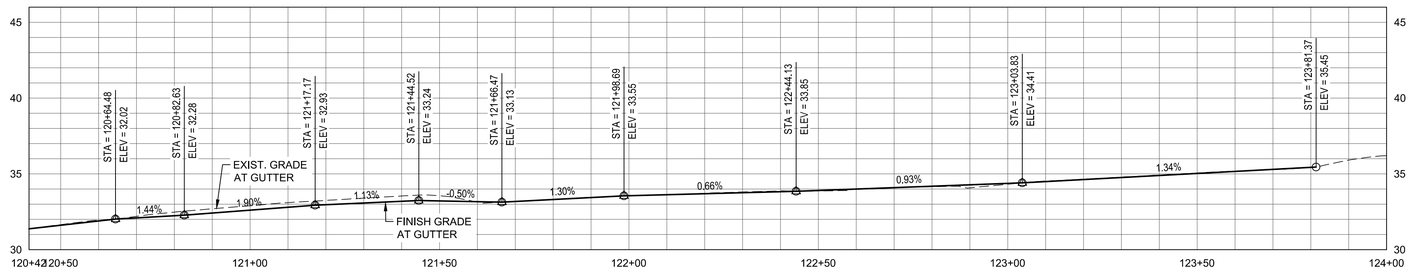

S. 1ST STREET LT CURB PROFILE STA 120+42 - 124+00

HORZ 0 20 40
VERT 0 5 10
SCALE IN FEET

CURB KEYPOINT ELEVATIONS				
LOCATION	CURB STATION	ROAD CL STATION	ROAD CL OFFSET	GUTTER ELEV
1	120+64.48	32+48.79	24.79'LT	32.02
2	120+77.31	32+55.01	13.57'LT	32.20
3	120+82.63	32+59.38	11.00'LT	32.28
4	120+90.92	32+67.67	11.00'LT	32.44
5	120+98.92	32+75.67	11.00'LT	32.59
6	121+27.65	33+04.40	11.00'LT	33.05
7	121+35.65	33+12.40	11.00'LT	33.14
8	121+44.52	33+21.28	11.00'LT	33.24
9	121+50.74	33+23.91	15.44'LT	33.21
10	121+61.46	33+18.75	24.84'LT	33.16
11	123+03.64	34+60.93	24.61'LT	34.40
12	123+81.37	35+38.66	24.34'LT	35.45

CURB KEYPOINT ELEVATIONS				
LOCATION	CURB STATION	ROAD CL STATION	ROAD CL OFFSET	GUTTER ELEV
1	119+13.24	32+26.90	19.00'RT	31.46
8	120+51.51	33+59.30	25.00'RT	33.43
9	122+18.59	35+26.37	25.00'RT	35.20

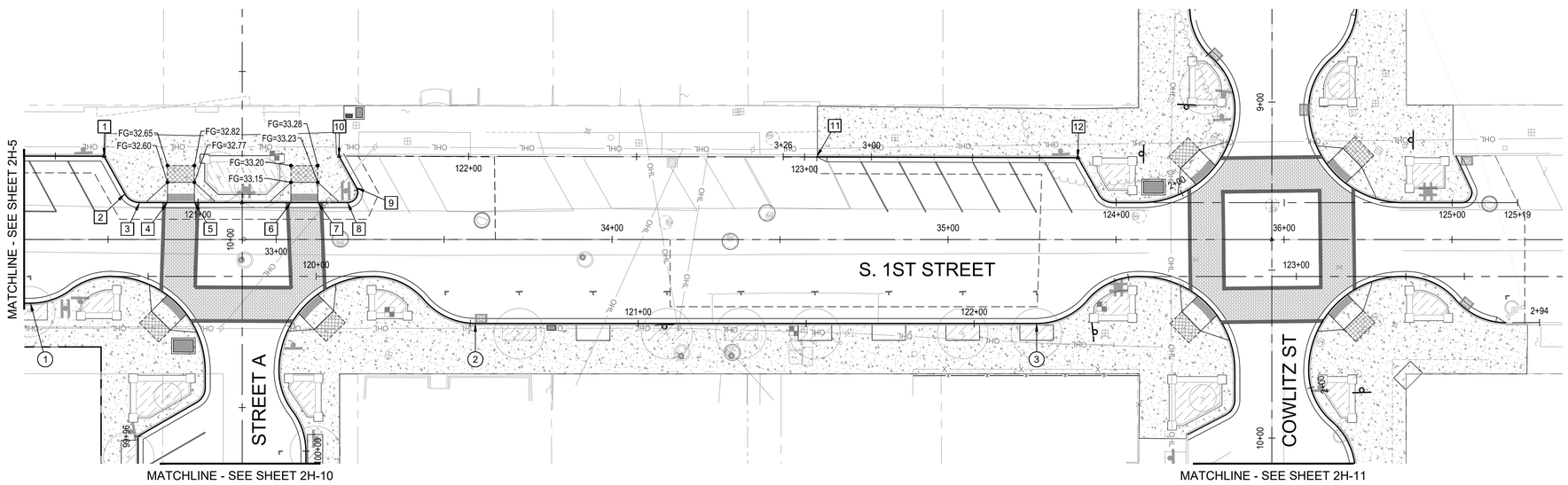

S. 1ST STREET STA 32+25 TO 37+00

0 20 40
SCALE IN FEET

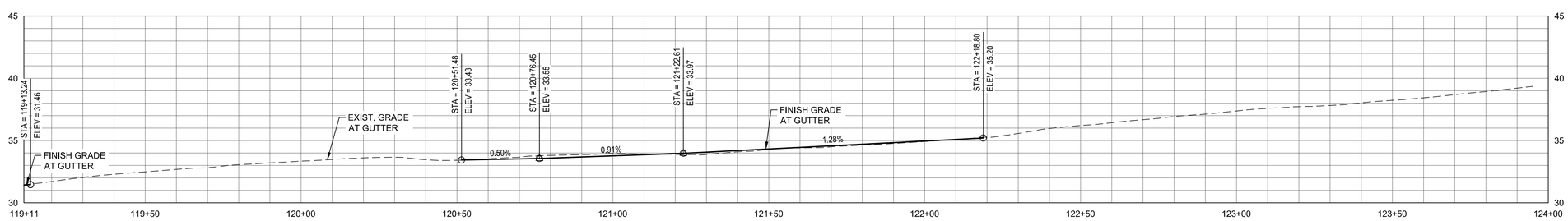

S. 1ST STREET RT CURB PROFILE STA 119+11 - 124+00

HORZ 0 20 40
VERT 0 5 10
SCALE IN FEET

City of St. Helens FOUNDED 1850

REGISTERED PROFESSIONAL ENGINEER 72,629 OREGON JUNE 11, 2008 KEITH BUISMAN
PRELIMINARY
EXPIRES: 12/31/2023

Otak
Otak, Inc.
808 SW Third Avenue, Ste. 800
Portland, OR 97204
503. 287. 6825
www.otak.com

S. 1ST AND STRAND STREETS ROAD AND UTILITY EXTENSIONS
ST. HELENS, OREGON
PARKING CURB PLANS

S. 1ST STREET PARKING CURB PLAN

TITLE

#	DATE	DESCRIPTION

REVISIONS

NAVD88
DATUM

OTAK CAD — KJB
DRAWN BY — CHECKED BY

90% PLANS
STATUS

JANUARY 10, 2022
DATE

19823
PROJECT NUMBER

2H-6

© 2021 OTAK, INC.

If this drawing is not 22" x 34", it has been reduced/enlarged. Scale accordingly.

Plotted: Jan 10, 2022 - 6:41pm keith.buisman L:\Project\19800\19823\CADD\ACAD\Dwg\C19823\2H.dwg Layout Name: 2H-6

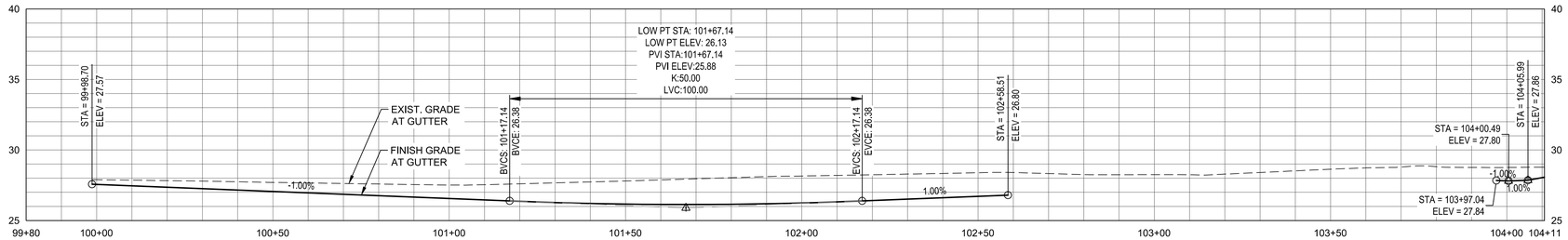

STRAND STREET LT CURB PROFILE STA 100+00 - 104+11

HORZ 0 20 40
VERT 0 5 10
SCALE IN FEET

CURB KEYPOINT ELEVATIONS				
LOCATION	CURB STATION	ROAD CL STATION	ROAD CL OFFSET	GUTTER ELEV
1	99+98.70	10+54.58	31.00'LT	27.57
2	102+58.51	13+14.39	31.00'LT	26.80
7	103+97.04	14+11.38	31.00'LT	27.84

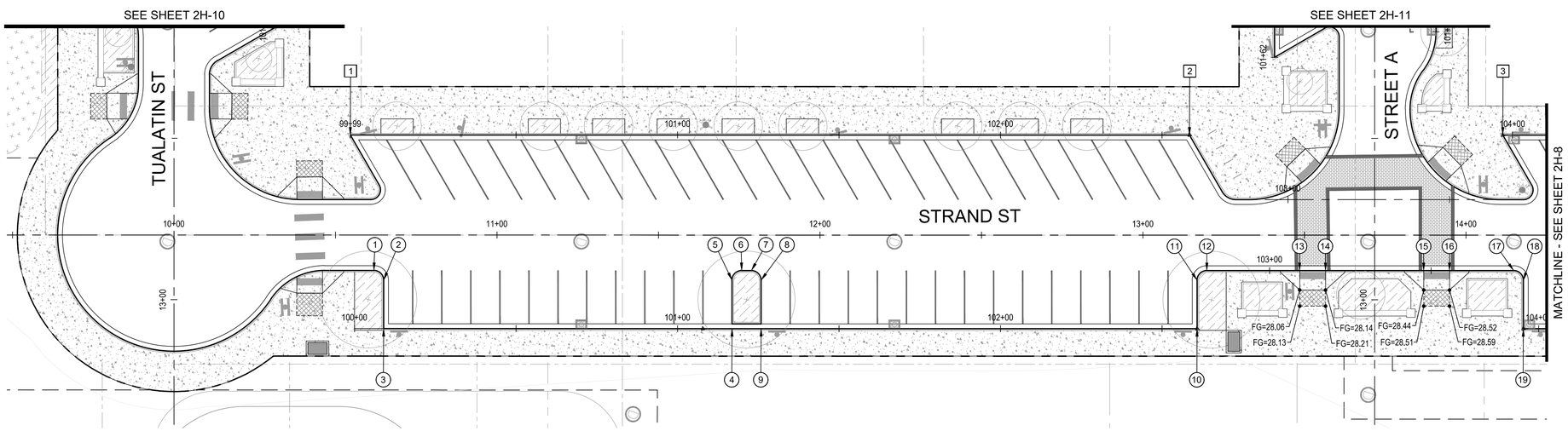

STRAND STREET STA 9+50 TO 14+50

0 20 40
SCALE IN FEET

CURB KEYPOINT ELEVATIONS				
LOCATION	CURB STATION	ROAD CL STATION	ROAD CL OFFSET	GUTTER ELEV
1	100+06.00	10+61.90	11.00'RT	28.00
2	100+09.00	10+64.90	14.00'RT	27.95
3	100+00.00	10+55.90	29.00'RT	28.25
4	101+16.86	11+72.77	29.00'RT	26.44
5	101+16.86	11+72.77	14.00'RT	26.86
6	101+19.86	11+75.77	11.00'RT	26.90
7	101+22.86	11+78.77	11.00'RT	26.88
8	101+25.86	11+81.77	14.00'RT	26.78
9	101+25.86	11+81.77	29.00'RT	26.35
10	102+60.86	13+16.77	29.00'RT	26.87
11	102+75.86	13+16.77	14.00'RT	27.24
12	102+80.58	13+19.77	11.00'RT	27.35
13	103+09.31	13+48.51	11.00'RT	27.64
14	103+17.31	13+56.51	11.00'RT	27.72
15	103+47.72	13+86.91	11.00'RT	28.02
16	103+55.72	13+94.91	11.00'RT	28.10
17	103+75.58	14+14.77	11.00'RT	28.30
18	103+80.29	14+17.77	14.00'RT	28.20
19	103+95.29	14+17.77	29.00'RT	27.88

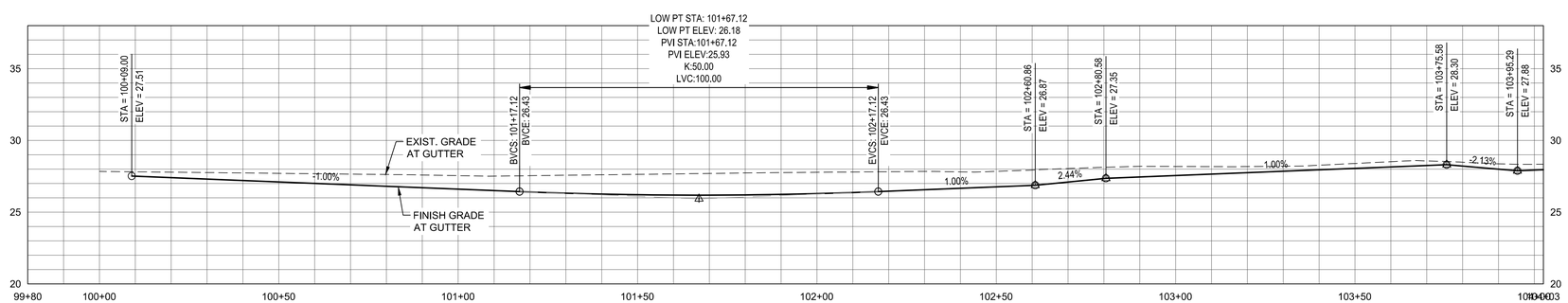

STRAND STREET RT CURB PROFILE STA 100+00 - 104+03

HORZ 0 20 40
VERT 0 5 10
SCALE IN FEET

City of St. Helens FOUNDED 1850

REGISTERED PROFESSIONAL ENGINEER 72,629 OREGON JUNE 11, 2008 KEITH BUISMAN
PRELIMINARY
EXPIRES: 12/31/2023

Otak

Otak, Inc.
808 SW Third Avenue, Ste. 800
Portland, OR 97204
503. 287. 6825
www.otak.com

S. 1ST AND STRAND STREETS ROAD AND UTILITY EXTENSIONS

ST. HELENS, OREGON
PARKING CURB PLANS

STRAND STREET PARKING CURB PLAN

TITLE

#	DATE	DESCRIPTION

REVISIONS

NAVD88
DATUM

OTAK CAD — KJB
DRAWN BY — CHECKED BY

90% PLANS
STATUS

JANUARY 10, 2022
DATE

19823
PROJECT NUMBER

2H-7

© 2021 OTAK, INC.

If this drawing is not 22" x 34", it has been reduced/enlarged. Scale accordingly.

Plotted: Jan 10, 2022 - 6:41pm keith.buisman L:\Project\19800\19823\CADD\ACAD\Dwgs\C19823CH.dwg Layout Name: 2H-7

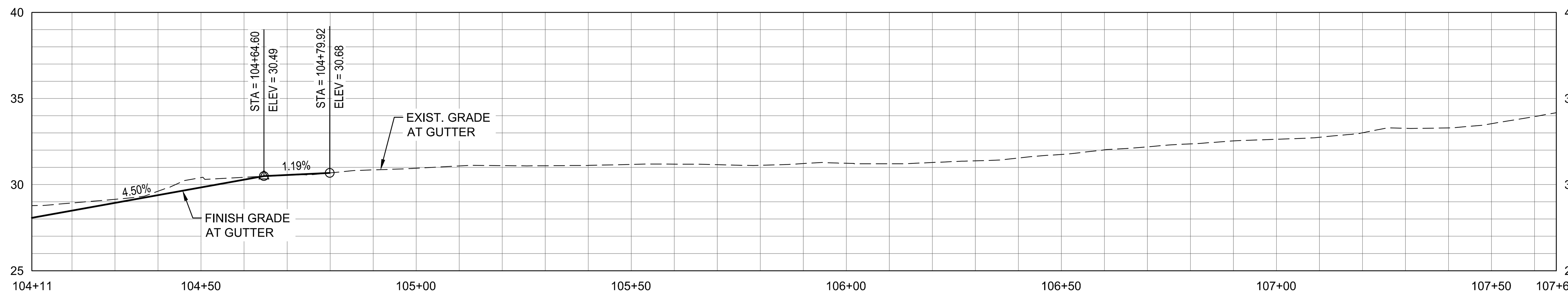

STRAND STREET LT CURB PROFILE STA 104+11 - 107+65

HORZ 0 20 40
VERT 0 5 10
SCALE IN FEET

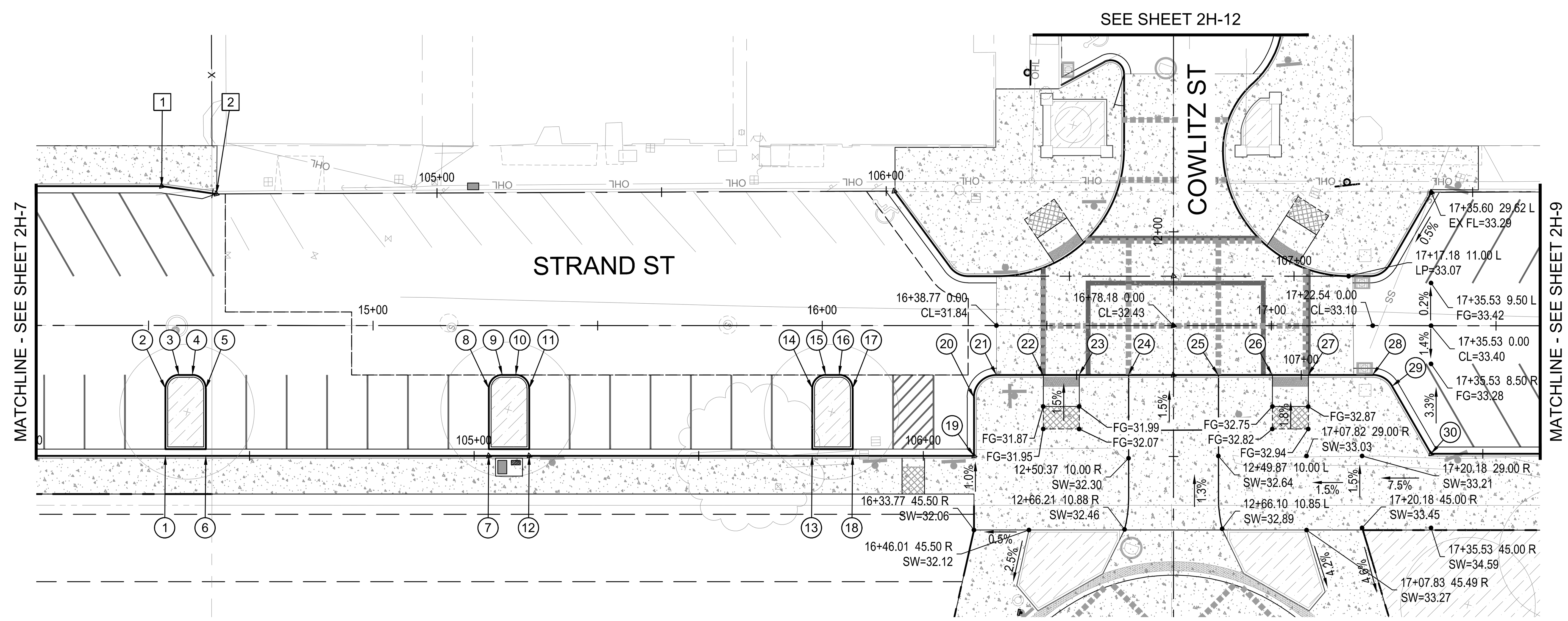

STRAND STREET STA 14+25 - 17+50

0 20 40
SCALE IN FEET

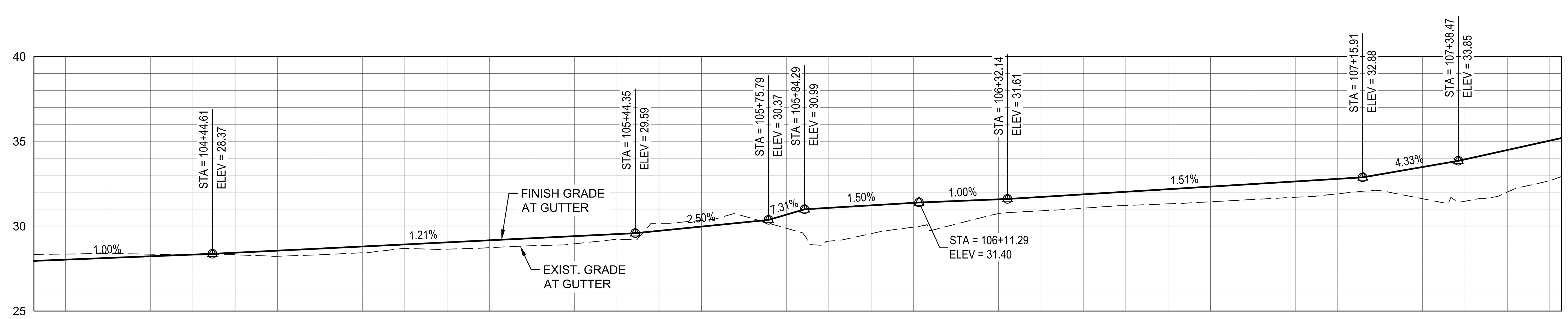

STRAND STREET RT CURB PROFILE STA 104+03 - 107+63

HORZ 0 20 40
VERT 0 5 10
SCALE IN FEET

CURB KEYPOINT ELEVATIONS				
LOCATION	CURB STATION	ROAD CL STATION	ROAD CL OFFSET	GUTTER ELEV
1	104+38.61	14+52.95	31.00'LT	29.33
2	104+50.87	14+65.09	29.27'LT	29.88

CURB KEYPOINT ELEVATIONS				
LOCATION	CURB STATION	ROAD CL STATION	ROAD CL OFFSET	GUTTER ELEV
1	104+31.29	14+53.77	29.00'RT	28.24
2	104+31.29	14+53.77	14.00'RT	28.66
3	104+34.29	14+56.77	11.00'RT	28.77
4	104+37.29	14+59.77	11.00'RT	28.80
5	104+40.29	14+62.77	14.00'RT	28.75
6	104+40.29	14+62.77	29.00'RT	28.33
7	105+03.29	15+25.77	29.00'RT	29.09
8	105+03.29	15+25.77	14.00'RT	29.51
9	105+06.29	15+28.77	11.00'RT	29.62
10	105+09.29	15+31.77	11.00'RT	29.66
11	105+12.29	15+34.77	14.00'RT	29.62
12	105+12.29	15+34.77	29.00'RT	29.20
13	105+75.29	15+97.77	29.00'RT	30.36
14	105+75.29	15+97.77	14.00'RT	30.78
15	105+78.29	16+00.77	11.00'RT	31.00
16	105+81.29	16+03.77	11.00'RT	31.16
17	105+84.29	16+06.77	14.00'RT	31.27
18	105+84.29	16+06.77	29.00'RT	30.99
19	106+11.29	16+33.77	29.00'RT	31.40
20	106+24.29	16+33.77	16.00'RT	31.53
21	106+32.14	16+38.77	11.00'RT	31.61
22	106+42.56	16+49.18	11.00'RT	31.76
23	106+50.56	16+57.18	11.00'RT	31.89
24	106+61.56	16+68.18	11.00'RT	32.05
25	106+81.56	16+88.19	11.00'RT	32.36
26	106+93.56	17+00.19	11.00'RT	32.54
27	107+01.56	17+08.19	11.00'RT	32.66
28	107+15.91	17+22.54	11.00'RT	32.88
29	107+21.14	17+26.87	13.50'RT	33.10
30	107+38.47	17+35.53	28.50'RT	33.85

City of St. Helens
FOUNDED 1850

REGISTERED PROFESSIONAL ENGINEER
72,629
PRELIMINARY
OREGON
JUNE 11, 2008
KEITH BUISMAN
EXPIRES: 12/31/2023

Otak
Otak, Inc.
808 SW Third Avenue, Ste. 800
Portland, OR 97204
503. 287. 6825
www.otak.com

S. 1ST AND STRAND STREETS ROAD AND UTILITY EXTENSIONS
ST. HELENS, OREGON
PARKING CURB PLANS

STRAND STREET PARKING CURB PLAN

TITLE

#	DATE	DESCRIPTION

REVISIONS

NAVD88
DATUM

OTAK CAD — KJB
DRAWN BY — CHECKED BY

90% PLANS
STATUS

JANUARY 10, 2022
DATE

19823
PROJECT NUMBER

2H-8

© 2021 OTAK, INC.

If this drawing is not 22" x 34", it has been reduced/enlarged. Scale accordingly.

Plotted: Jan 10, 2022 - 6:42pm keith.buisman L:\Project\19800\19823\CADD\ACAD\Dwg\C19823C2H.dwg Layout Name: 2H-8

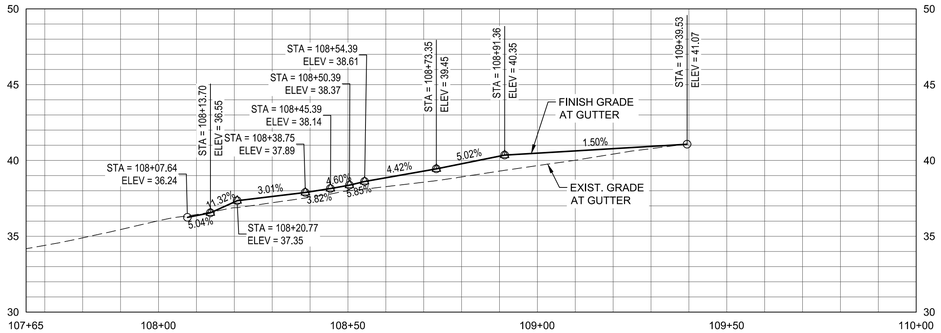

STRAND STREET LT CURB PROFILE STA 107+65 - 110+00

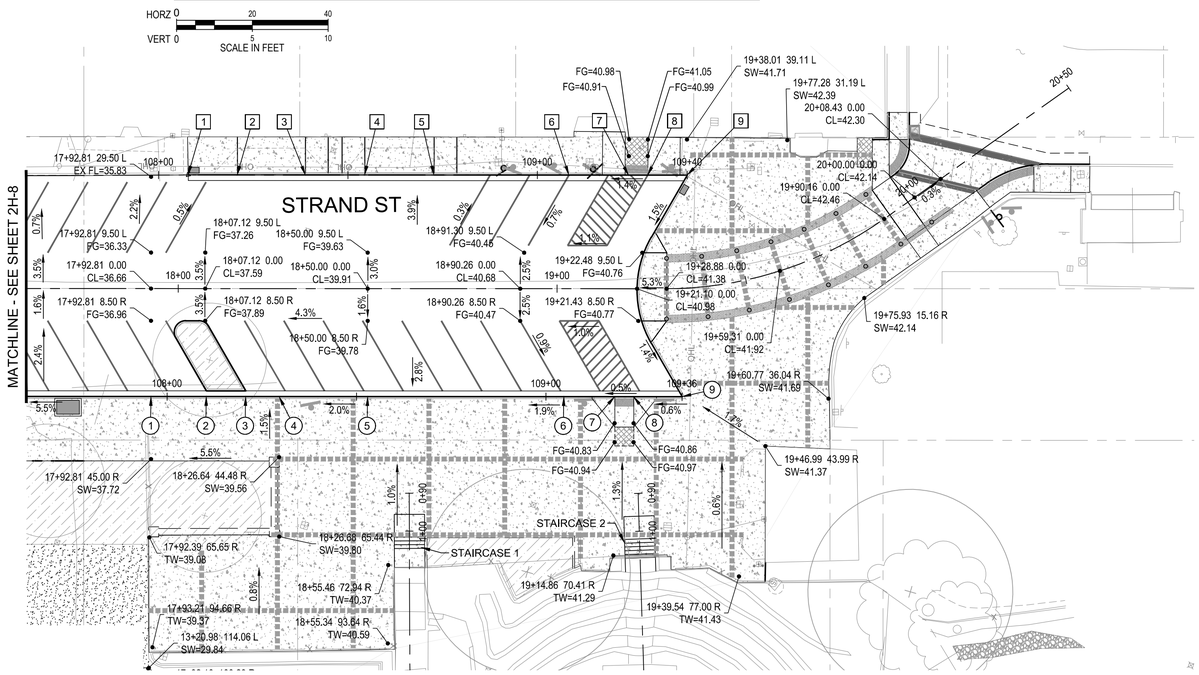

STRAND STREET STA 17+50 - 20+50

0 20 40
SCALE IN FEET

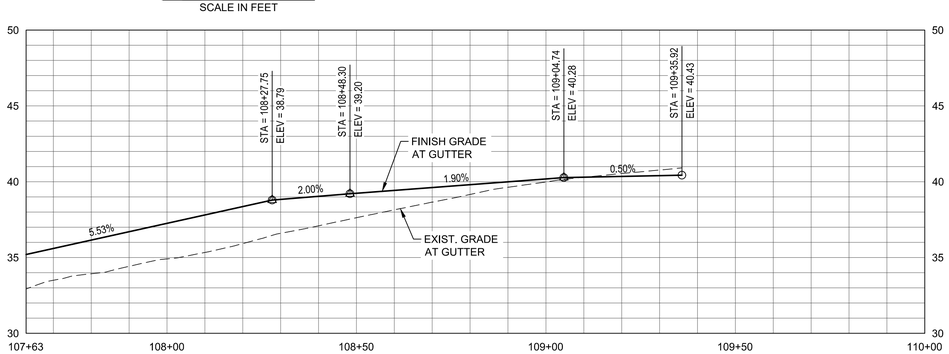

STRAND STREET RT CURB PROFILE STA 107+63 - 110+00

HORZ 0 20 40
VERT 0 5 10
SCALE IN FEET

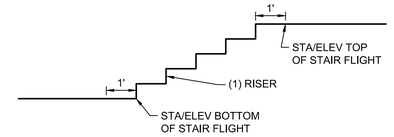

STAIRWAY STATIONING REFERENCE

N.T.S.

STAIRWAY CONSTRUCTION KEY NOTES

1. CONSTRUCT CONCRETE STAIRS AND RAILING. SEE STATIONING REFERENCE ABOVE AND LANDSCAPE PLANS FOR DETAILS.

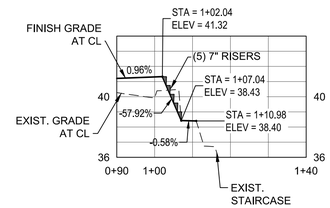

COLUMBIA VIEW PARK - STAIRCASE 2 PROFILE

HORZ 0 20 40
VERT 0 5 10
SCALE IN FEET

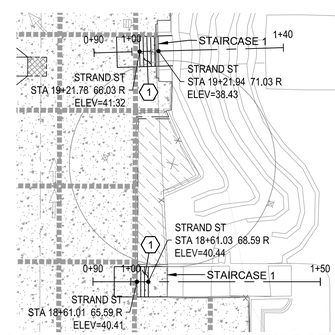

COLUMBIA VIEW PARK STAIRSETS

0 20 40
SCALE IN FEET

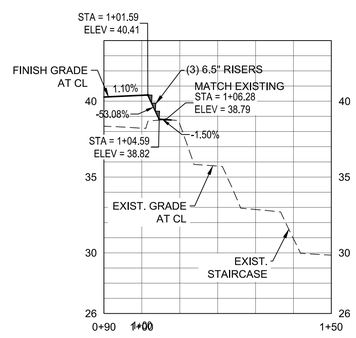

COLUMBIA VIEW PARK - STAIRCASE 1 PROFILE

HORZ 0 20 40
VERT 0 5 10
SCALE IN FEET

CURB KEYPOINT ELEVATIONS

LOCATION	CURB STATION	ROAD CL STATION	ROAD CL OFFSET	GUTTER ELEV
1	108+07.78	18+02.57	30.00'LT	36.25
2	108+18.50	18+15.56	30.00'LT	37.35
3	108+36.47	18+33.53	29.99'LT	37.89
4	108+52.12	18+49.18	30.00'LT	38.61
5	108+70.41	18+67.47	30.03'LT	39.42
6	109+06.06	19+03.12	29.96'LT	40.60
7	109+24.09	19+18.87	30.00'LT	40.84
8	109+29.09	19+23.87	30.00'LT	40.92
9	109+39.53	19+36.80	29.76'LT	41.07

CURB KEYPOINT ELEVATIONS

LOCATION	CURB STATION	ROAD CL STATION	ROAD CL OFFSET	GUTTER ELEV
1	107+95.75	17+92.81	28.50'RT	37.02
2	108+10.35	18+07.41	28.50'RT	37.83
3	108+20.74	18+17.80	28.50'RT	38.40
4	108+29.57	18+26.64	28.50'RT	38.83
5	108+52.94	18+50.00	28.50'RT	39.29
6	109+04.74	19+01.80	28.50'RT	40.27
7	109+18.13	19+15.20	28.50'RT	40.34
8	109+23.13	19+20.20	28.50'RT	40.37
9	109+35.92	19+31.98	28.58'RT	40.43

City of St. Helens
FOUNDED 1850

REGISTERED PROFESSIONAL ENGINEER
72,629
PRELIMINARY
OREGON
JUNE 11, 2022
KEITH BUISMAN
EXPIRES: 12/31/2023

Otak

Otak, Inc.
808 SW Third Avenue, Ste. 800
Portland, OR 97204
503. 287. 6825
www.otak.com

S. 1ST AND STRAND STREETS ROAD AND UTILITY EXTENSIONS

ST. HELENS, OREGON
PARKING CURB PLANS

STRAND STREET PARKING CURB PLAN

TITLE

.	DATE	DESCRIPTION

REVISIONS

NAVD88
DATUM

OTAK CAD — KB—
DRAWN BY — CHECKED BY

90% PLANS
STATUS

JANUARY 10, 2022
DATE

19823
PROJECT NUMBER

2H-9

© 2021 OTAK, INC.

If this drawing is not 22" x 34", it has been reduced/enlarged. Scale accordingly.

Plotted: Jan 10, 2022 - 6:43am, keith.buisman L:\Project\19800\19823\CADD\ACAD\Dwgs\C19823\2H.dwg Layout Name: 2H-9

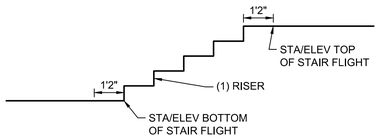

STAIRWAY STATIONING REFERENCE

N.T.S.

STAIRWAY CONSTRUCTION KEY NOTES

1. CONSTRUCT CONCRETE STAIRS AND RAILING. SEE STATIONING REFERENCE ABOVE AND LANDSCAPE PLANS FOR DETAILS.

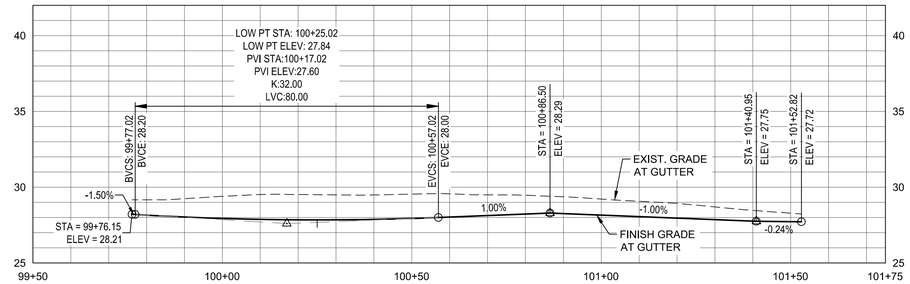

TUALATIN STREET LT CURB PROFILE STA 99+76 - 101+53

HORZ 0 20 40
VERT 0 5 10
SCALE IN FEET

CURB KEYPOINT ELEVATIONS				
LOCATION	CURB STATION	ROAD CL STATION	ROAD CL OFFSET	GUTTER ELEV
1	99+76.15	10+39.15	31.00'LT	28.21
2	100+45.50	11+08.50	31.00'LT	27.90
3	100+69.50	11+32.50	31.00'LT	28.12
4	101+52.82	12+15.82	31.00'LT	27.72

CURB KEYPOINT ELEVATIONS				
LOCATION	CURB STATION	ROAD CL STATION	ROAD CL OFFSET	GUTTER ELEV
1	100+00.00	10+63.00	19.00'RT	28.24
2	101+32.00	11+95.00	19.00'RT	28.14

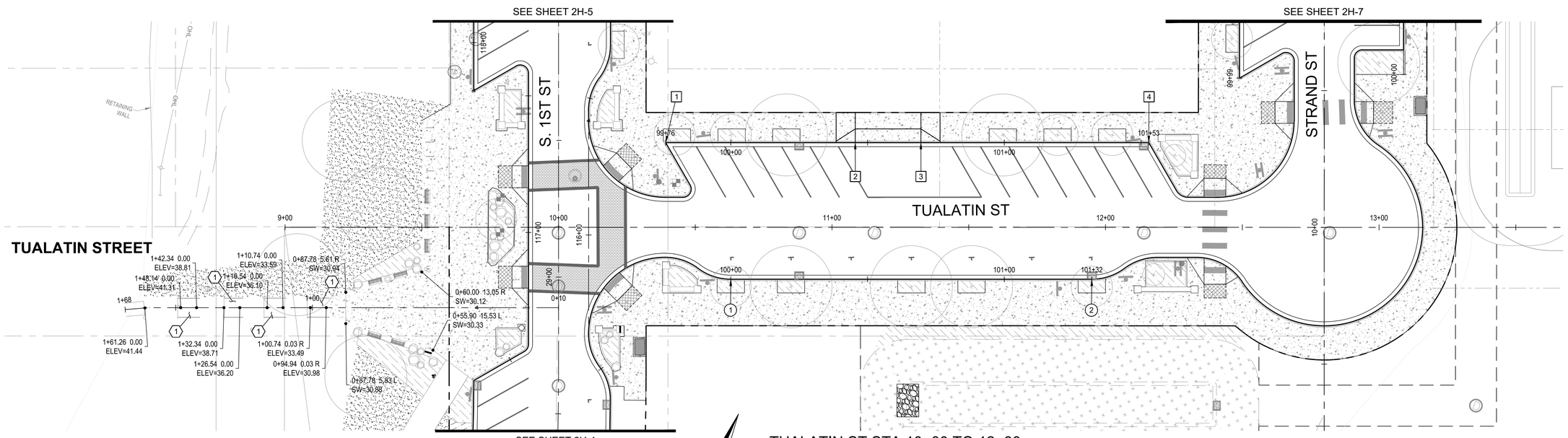

TUALATIN ST STA 10+00 TO 12+80

0 20 40
SCALE IN FEET

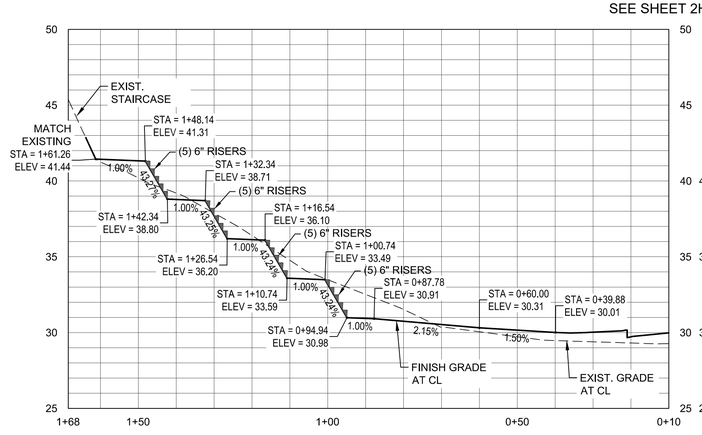

TUALATIN STREET STAIRCASE STA 1+68 TO 0+10

HORZ 0 20 40
VERT 0 5 10
SCALE IN FEET

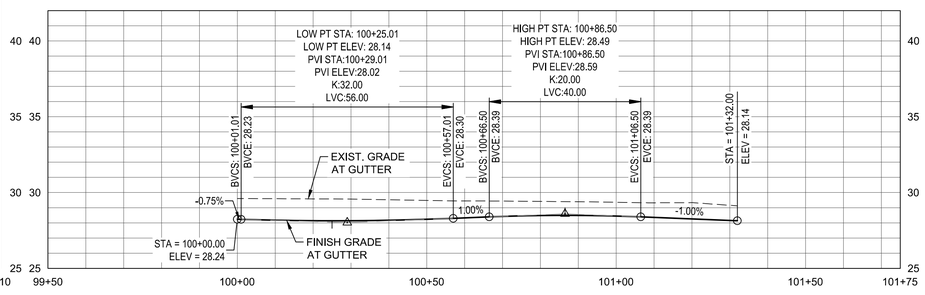

TUALATIN STREET TrtT CURB PROFILE STA 100+00 - 101+32

HORZ 0 20 40
VERT 0 5 10
SCALE IN FEET

City of St. Helens FOUNDED 1850

REGISTERED PROFESSIONAL ENGINEER 72,629 OREGON JUNE 11, 2008 KEITH BUISMAN
PRELIMINARY
EXPIRES: 12/31/2023

Otak
Otak, Inc.
808 SW Third Avenue, Ste. 800
Portland, OR 97204
503. 287. 6825
www.otak.com

S. 1ST AND STRAND STREETS ROAD AND UTILITY EXTENSIONS

ST. HELENS, OREGON
PARKING CURB PLANS

TUALATIN STREET PARKING CURB PLAN

TITLE

#	DATE	DESCRIPTION

REVISIONS

NAVD88
DATUM

OTAK CAD — KJB
DRAWN BY — CHECKED BY

90% PLANS
STATUS

JANUARY 10, 2022
DATE

19823
PROJECT NUMBER

2H-10

© 2021 OTAK, INC.

If this drawing is not 22" x 34", it has been reduced/enlarged. Scale accordingly.

Plotted: Jan 10, 2022 - 8:46am keith.buisman L:\Project\19800\19823\CADD\ACAD\Dwg\C19823C2H.dwg Layout Name: 2H-10

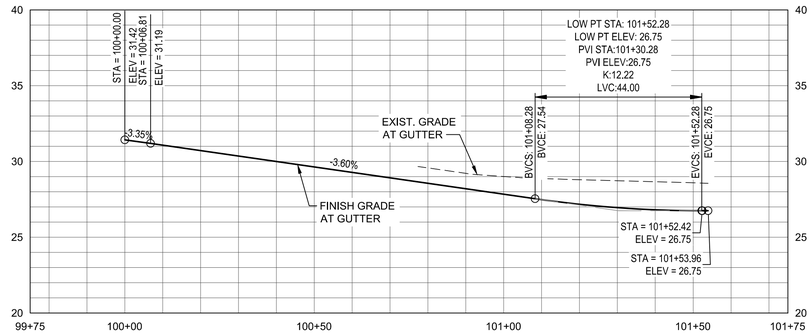

STREET A LT CURB PROFILE STA 100+00 - 101+54

HORZ 0 20 40
VERT 0 5 10
SCALE IN FEET

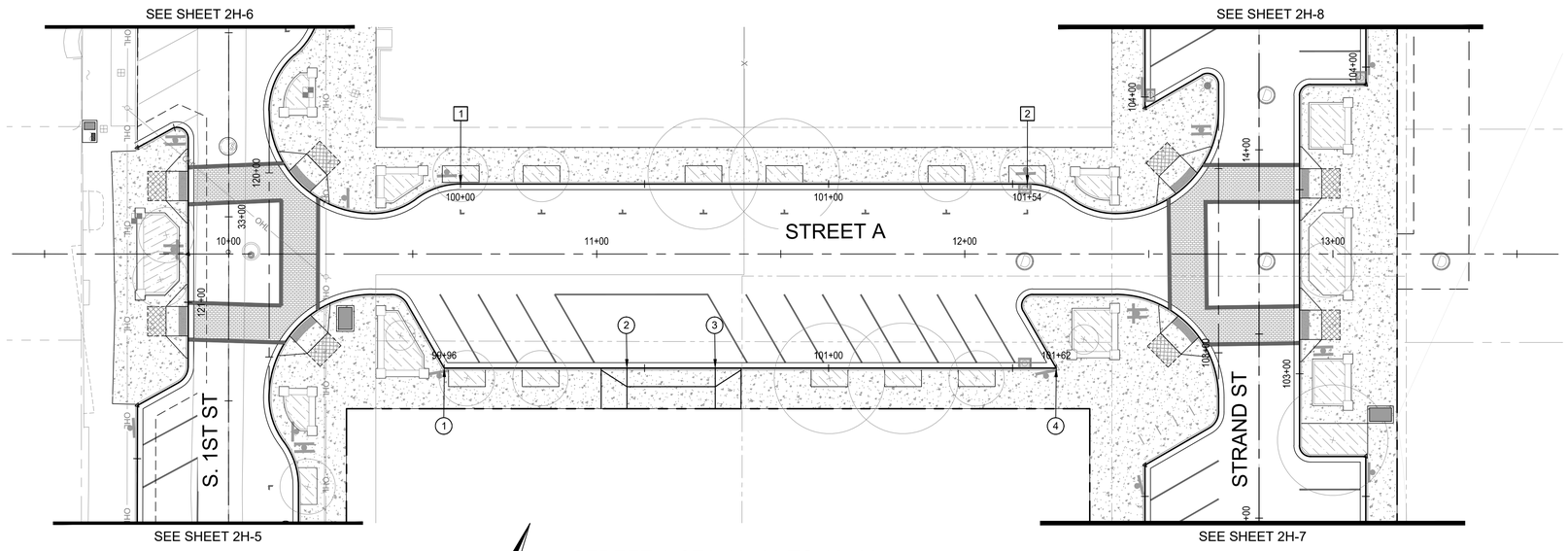

STREET A STA 10+00 TO 12+80

0 20 40
SCALE IN FEET

CURB KEYPOINT ELEVATIONS				
LOCATION	CURB STATION	ROAD CL STATION	ROAD CL OFFSET	GUTTER ELEV
1	100+00.00	10+63.00	19.00'LT	31.42
2	101+53.96	12+16.96	19.00'LT	26.75

CURB KEYPOINT ELEVATIONS				
LOCATION	CURB STATION	ROAD CL STATION	ROAD CL OFFSET	GUTTER ELEV
1	99+95.58	10+58.58	31.00'RT	31.26
2	100+45.19	11+08.19	31.00'RT	29.51
3	100+69.19	11+32.19	31.00'RT	28.65
4	101+61.86	12+24.86	31.00'RT	26.47

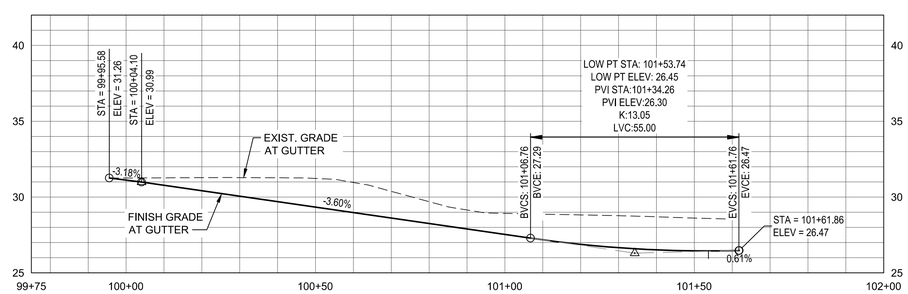

STREET A RT CURB PROFILE STA 99+96 - 101+62

HORZ 0 20 40
VERT 0 5 10
SCALE IN FEET

City of St. Helens FOUNDED 1850

REGISTERED PROFESSIONAL ENGINEER 72,629 OREGON JUNE 11, 2009 KEITH BUISMAN
PRELIMINARY
EXPIRES: 12/31/2023

Otak

Otak, Inc.
808 SW Third Avenue, Ste. 800
Portland, OR 97204
503. 287. 6825
www.otak.com

S. 1ST AND STRAND STREETS ROAD AND UTILITY EXTENSIONS

ST. HELENS, OREGON
PARKING CURB PLANS

STREET A PARKING CURB PLAN

TITLE

#	DATE	DESCRIPTION

REVISIONS

NAVD88
DATUM

OTAK CAD — KJB
DRAWN BY — CHECKED BY

90% PLANS
STATUS

JANUARY 10, 2022
DATE

19823
PROJECT NUMBER

2H-11

© 2021 OTAK, INC.

If this drawing is not 22" x 34", it has been reduced/enlarged. Scale accordingly.

Plotted: Jan 10, 2022 - 8:44pm keith.buisman L:\Project\19800\19823\CADD\ACAD\Dwg\C19823H2H.dwg Layout Name: 2H-11

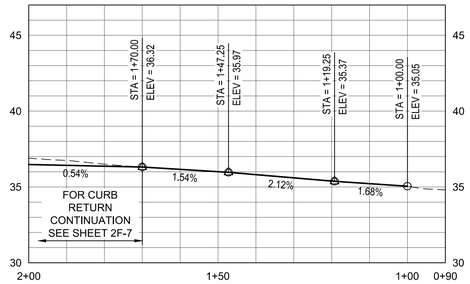

COWLITZ STREET LT CURB PROFILE STA 1+00 - 1+70

HORZ 0 20 40
VERT 0 5 10
SCALE IN FEET

CURB KEYPOINT ELEVATIONS				
LOCATION	CURB STATION	ROAD CL STATION	ROAD CL OFFSET	GUTTER ELEV
1	1+00.00	10+80.98	24.55'LT	35.05
2	1+26.25	10+54.73	24.65'LT	35.52
3	1+40.25	10+40.73	24.71'LT	35.82
4	1+70.74	10+10.24	24.83'LT	36.32

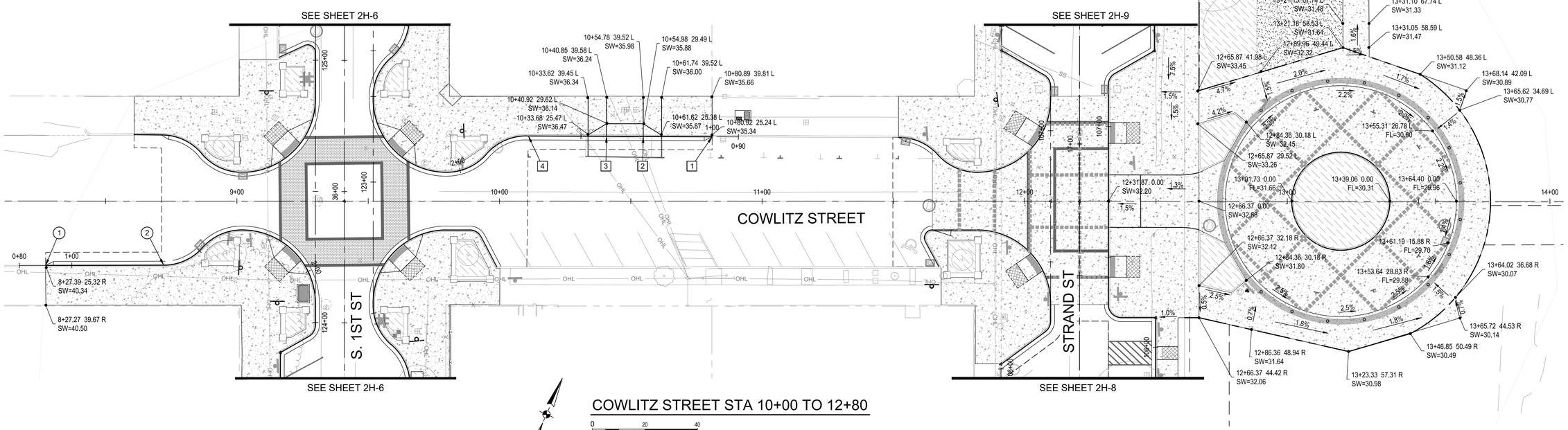

COWLITZ STREET STA 10+00 TO 12+80

0 20 40
SCALE IN FEET

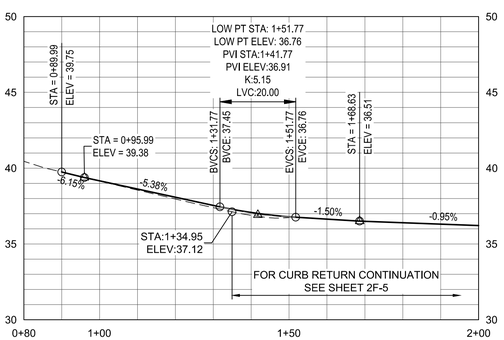

CURB KEYPOINT ELEVATIONS				
LOCATION	CURB STATION	ROAD CL STATION	ROAD CL OFFSET	GUTTER ELEV
1	0+90.00	8+27.13	24.52'RT	39.75
2	1+34.95	8+72.08	24.39'RT	37.29

COWLITZ STREET RT CURB PROFILE STA 0+90 - 1+35

HORZ 0 20 40
VERT 0 5 10
SCALE IN FEET

Plotted: Jan 10, 2022 - 6:45pm keith.buisman L:\Project\19800\19823\CADD\ACAD\Dwg\C19823C2H.dwg Layout Name: 2h-12

City of St. Helens FOUNDED 1850

REGISTERED PROFESSIONAL ENGINEER 72,629 OREGON JUNE 11, 2009 KEITH BUISMAN
PRELIMINARY
EXPIRES: 12/31/2023

Otak
Otak, Inc.
808 SW Third Avenue, Ste. 800
Portland, OR 97204
503. 287. 6825
www.otak.com

S. 1ST AND STRAND STREETS ROAD AND UTILITY EXTENSIONS

ST. HELENS, OREGON
PARKING CURB PLANS

COWLITZ STREET PARKING CURB PLAN

TITLE

#	DATE	DESCRIPTION

REVISIONS

NAVD88
DATUM

OTAK CAD — KJB
DRAWN BY — CHECKED BY

90% PLANS
STATUS

JANUARY 10, 2022
DATE

19823
PROJECT NUMBER

2H-12

© 2021 OTAK, INC.

If this drawing is not 22" x 34", it has been reduced/enlarged. Scale accordingly.

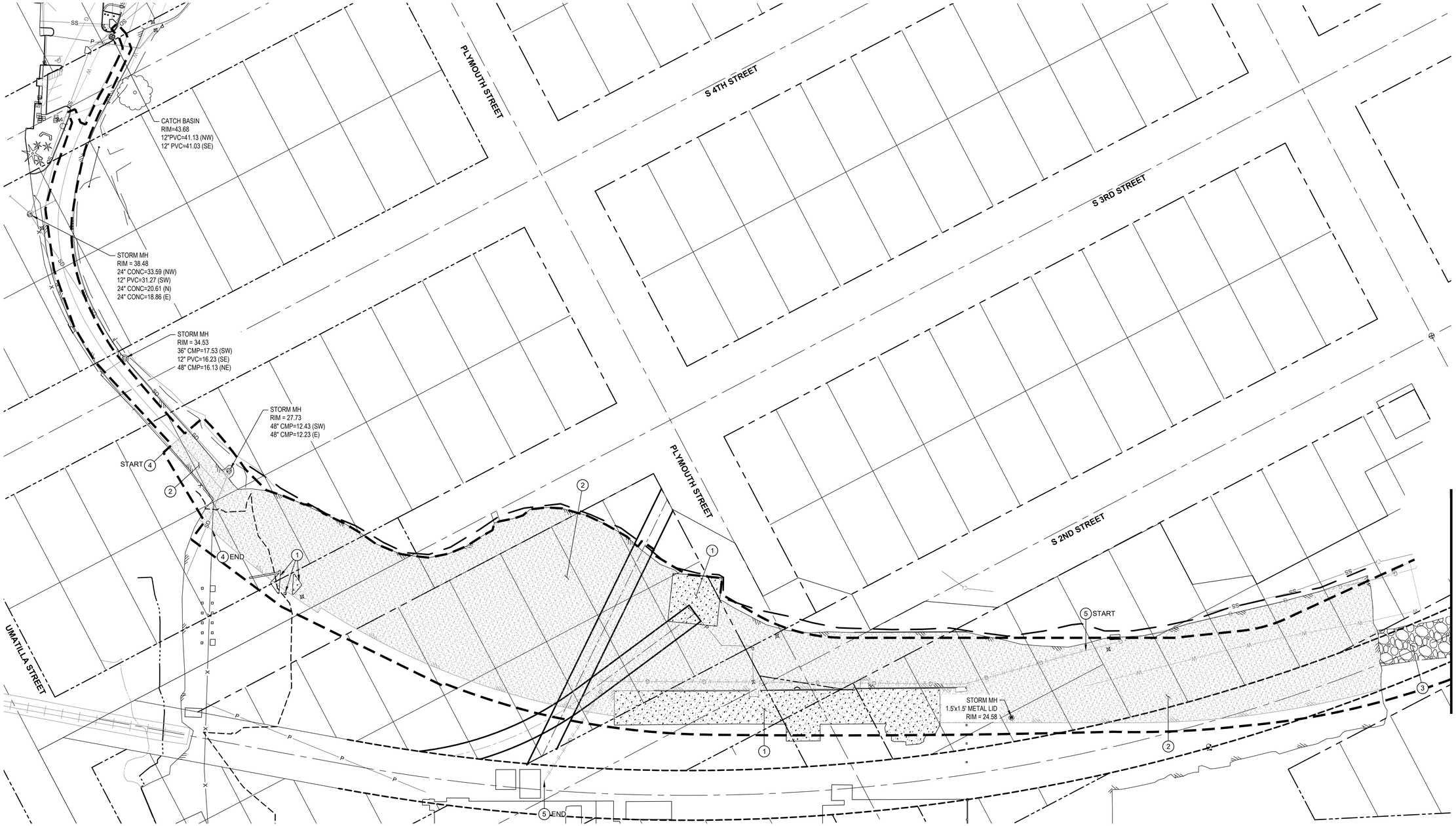

DEMOLITION KEY NOTES

1. REMOVE EXISTING CONCRETE PAD.
2. REMOVE EXISTING ASPHALT.
3. REMOVE EXISTING GRAVEL.
4. REMOVE EXISTING FENCE.
5. REMOVE EXISTING GAS LINE.

LEGEND:

- CONCRETE
- ASPHALT
- GRAVEL

0 50 100
SCALE IN FEET

PRELIMINARY

Otak

Otak, Inc.
808 SW Third Avenue, Ste. 800
Portland, OR 97204
503. 287. 6825
www.otak.com

S. 1ST AND STRAND STREETS ROAD AND UTILITY EXTENSIONS

ST. HELENS, OREGON
EXISTING CONDITIONS AND DEMOLITION PLANS

EXISTING CONDITIONS AND DEMOLITION

TITLE

.	DATE	DESCRIPTION

REVISIONS

NAVD88
DATUM

OTAK CAD — KJB
DRAWN BY — CHECKED BY

90% PLANS
STATUS

JANUARY 10, 2022
DATE

19823
PROJECT NUMBER

2J-1

© 2021 OTAK, INC.

If this drawing is not 22" x 34", it has been reduced/enlarged. Scale accordingly.

Plotted: Jan 10, 2022 - 6:45am keith.buisman L:\Project\19800\19823\CADD\ACAD\Dwg\C19823C2J.dwg Layout Name: 2J-1

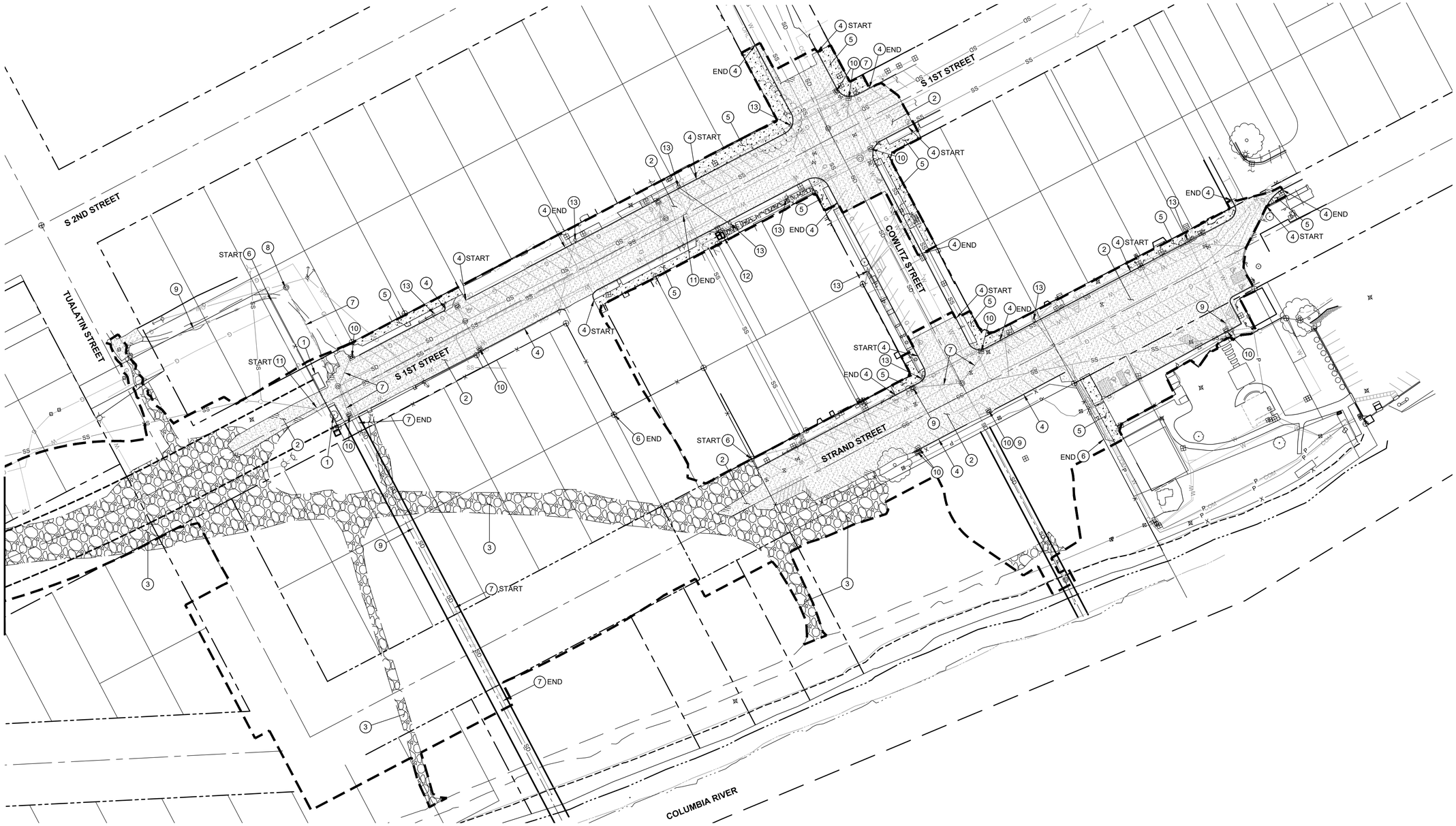

DEMOLITION KEY NOTES

1. REMOVE EXISTING CONCRETE PLANTER.
2. REMOVE EXISTING ASPHALT.
3. REMOVE EXISTING GRAVEL.
4. REMOVE EXISTING CURB LINE.
5. REMOVE EXISTING SIDEWALK.
6. REMOVE EXISTING FENCE.
7. REMOVE EXISTING STORM DRAIN LINE.
8. ABANDON EXISTING STORM DRAIN MANHOLE.
9. ABANDON EXISTING STORM DRAIN LINE.
10. REMOVE EXISTING CATCH BASIN.
11. ABANDON EXISTING SANITARY SEWER LINE.
12. REMOVE EXISTING SANITARY PUMP STATION.
13. REMOVE EXISTING POWER POLE, UNDERGROUNDING, AND OVERHEAD LINES.

LEGEND:

- CONCRETE
- ASPHALT
- GRAVEL

0 50 100
SCALE IN FEET

PRELIMINARY

Otak, Inc.
808 SW Third Avenue, Ste. 800
Portland, OR 97204
503. 287. 6825
www.otak.com

S. 1ST AND STRAND STREETS ROAD AND UTILITY EXTENSIONS

ST. HELENS, OREGON
EXISTING CONDITIONS AND DEMOLITION PLANS

EXISTING CONDITIONS AND DEMOLITION

TITLE	
. DATE	DESCRIPTION
REVISIONS	
NAVD88	
DATUM	
OTAK CAD	KJB
DRAWN BY	CHECKED BY
90% PLANS	
STATUS	
JANUARY 10, 2022	
DATE	
19823	
PROJECT NUMBER	

2J-2

© 2021 OTAK, INC.

If this drawing is not 22" x 34", it has been reduced/enlarged. Scale accordingly.

Plotted: Jan 10, 2022 - 6:45pm keith.buisman L:\Project\19800\19823\CADD\ACAD\Dwg\C19823C2J.dwg Layout Name: 2J-2

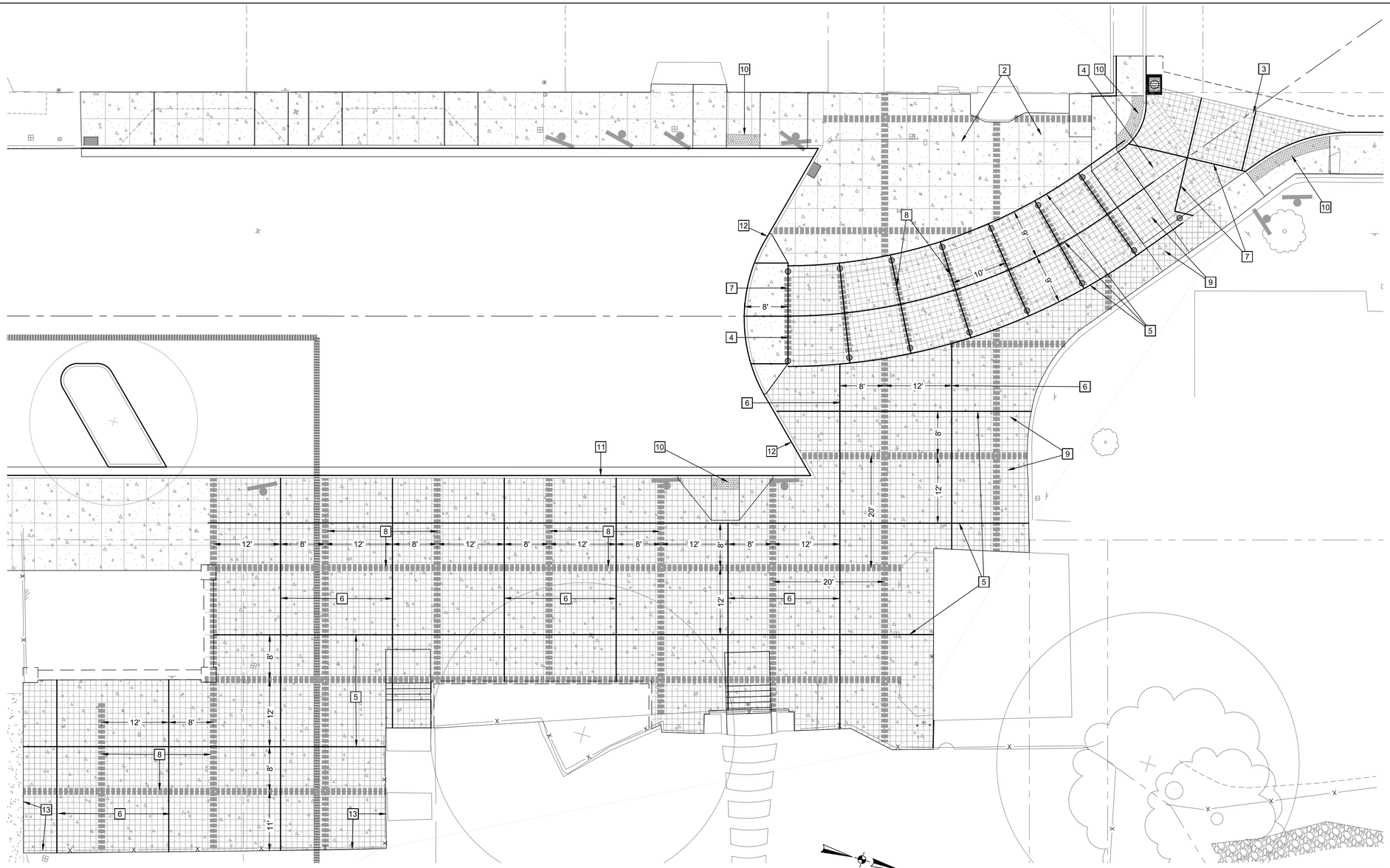

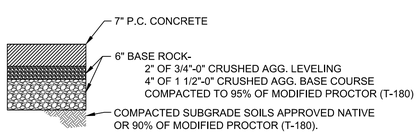

P.C. CONCRETE SECTION

NOT TO SCALE

* USE 4000-1 1/2 PAVING CONCRETE (MIN. 650 PSI 28-DAY FLEXURAL STRENGTH)

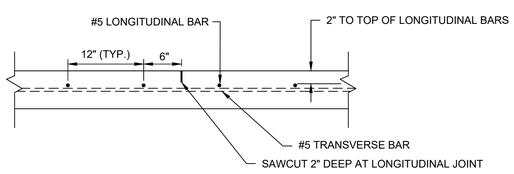

LONGITUDINAL JOINT

NOT TO SCALE

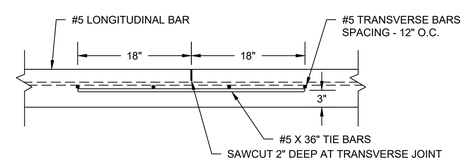

TRANSVERSE CONSTRUCTION JOINT

NOT TO SCALE

REINFORCING NOTES:

1. SEE ODOT DETAIL 1603 FOR LAPPING METHOD

2. USE REINFORCING STEEL CONFORMING TO ASTM A706 OR AASHTO M31 (ASTM A615) GRADE 60. USE FULL LENGTH BARS AS SHOWN, AND PLACE THEM A MINIMUM 2" CLEAR OF THE NEAREST FACE OF CONCRETE.

GENERAL CONSTRUCTION NOTES

1. CONSTRUCT CONTINUOUSLY REINFORCED P.C. CONCRETE.
2. P.C. CONC. SCORING LINE (SEE LANDSCAPE PLANS FOR SCORE JOINT LOCATIONS)
3. EDGE OF P.C. CONCRETE. CONSTRUCT CONCRETE TRANSITION PANEL PER DETAIL ODOT DETAIL 1604, SHEET 2B-2.
4. CONSTRUCT RAMP.
5. CONSTRUCT LONGITUDINAL JOINT (2" DEEP). SEE DETAIL THIS SHEET.
6. CONSTRUCT TRANSVERSE CONSTRUCTION JOINT (2" DEEP). SEE DETAIL THIS SHEET.
7. CONSTRUCT ISOLATION JOINT (1/2" WIDE).
8. CONSTRUCT UNIT PAVERS BAND. SEE LANDSCAPE PLANS FOR DETAILS.
9. CONSTRUCT #5 BARS 12" O.C. IN BOTH DIRECTIONS.
10. INSTALL TRUNCATED DOMES PER CITY OF ST. HELENS STANDARDS.
11. CONSTRUCT STANDARD MONOLITHIC CURB AND GUTTER PER CITY OF ST. HELENS STD DETAIL 200, SHEET 2B-1.
12. CONSTRUCT STANDARD TYPE A CURB PER CITY OF ST. HELENS STD DETAIL 210, SHEET 2B-1.
13. CONSTRUCT WALL EXTENSION. SEE SHEET 2L-1 FOR DETAILS.

City of St. Helens FOUNDED 1850

REGISTERED PROFESSIONAL ENGINEER 72,629 OREGON JUNE 11, 2008 KEITH BUISMAN
PRELIMINARY
EXPIRES: 12/31/2023

Otak, Inc.
808 SW Third Avenue, Ste. 800
Portland, OR 97204
503. 287. 6825
www.otak.com

S. 1ST AND STRAND STREETS ROAD AND UTILITY EXTENSIONS

ST. HELENS, OREGON
CONCRETE REINFORCEMENT PLANS

STRAND STREET

TITLE

#	DATE	DESCRIPTION

REVISIONS

NAVD88
DATUM

OTAK CAD
DRAWN BY | CHECKED BY

90% PLANS
STATUS

JANUARY 10, 2022
DATE

19823
PROJECT NUMBER

2K-1

© 2021 OTAK, INC.

If this drawing is not 22" x 34", it has been reduced/enlarged. Scale accordingly.

Plotted: Jan 10, 2022 - 6:47pm keith.buisman L:\Project\19800\19823\CAD\CAD\Civil\C19823K2K.dwg Layout Name: 2K-1

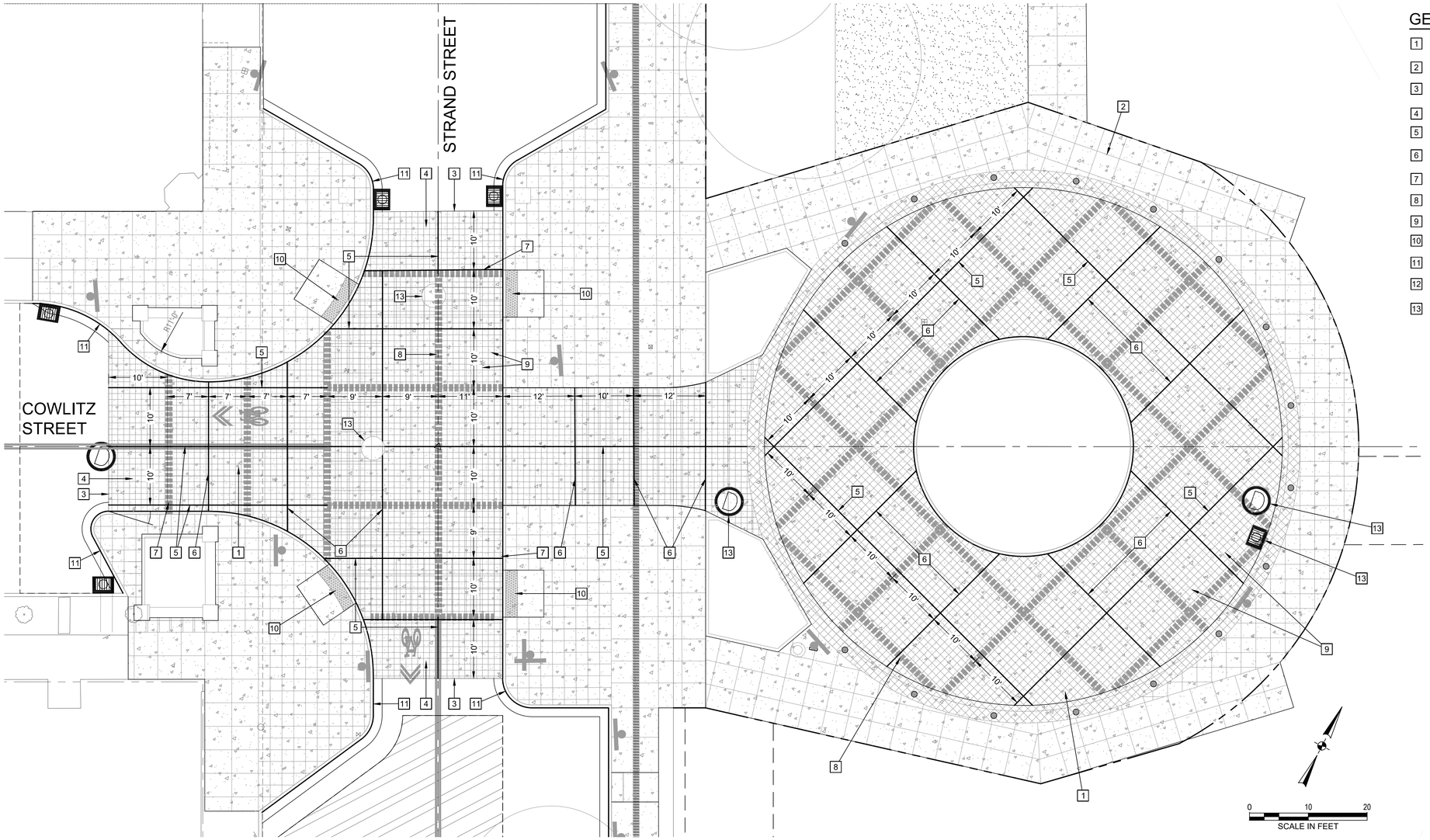

GENERAL CONSTRUCTION NOTES

1. CONSTRUCT CONTINUOUSLY REINFORCED P.C. CONCRETE.
2. P.C. CONC. SCORING LINE (SEE LANDSCAPE PLANS FOR SCORE JOINT LOCATIONS)
3. EDGE OF P.C. CONCRETE. CONSTRUCT CONCRETE TRANSITION PANEL PER DETAIL ODOT DETAIL 1604, SHEET 2B-2.
4. CONSTRUCT RAMP.
5. CONSTRUCT LONGITUDINAL JOINT (2" DEEP). SEE DETAIL THIS SHEET.
6. CONSTRUCT TRANSVERSE CONSTRUCTION JOINT (2" DEEP). SEE DETAIL THIS SHEET.
7. CONSTRUCT ISOLATION JOINT (1/2" WIDE).
8. CONSTRUCT UNIT PAVERS BAND. SEE LANDSCAPE PLANS FOR DETAILS.
9. CONSTRUCT #5 BARS 12" O.C. IN BOTH DIRECTIONS.
10. INSTALL TRUNCATED DOMES PER CITY OF ST. HELENS STANDARDS.
11. CONSTRUCT STANDARD MONOLITHIC CURB AND GUTTER PER CITY OF ST. HELENS STD DETAIL 200, SHEET 2B-1.
12. CONSTRUCT STANDARD TYPE A CURB PER CITY OF ST. HELENS STD DETAIL 210, SHEET 2B-1.
13. CONSTRUCT CIRCULAR ISOLATION JOINT (1/2" WIDE). CONSTRUCT CONCRETE INSIDE OF CIRCULAR ISOLATION JOINT WITHFIBER MESH.

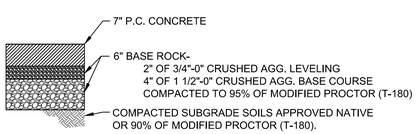

P.C. CONCRETE SECTION
NOT TO SCALE

* USE 4000-1 1/2 PAVING CONCRETE (MIN. 650 PSI 28-DAY FLEXURAL STRENGTH)

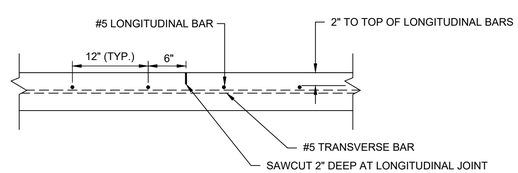

LONGITUDINAL JOINT
NOT TO SCALE

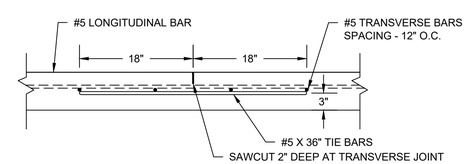

TRANSVERSE CONSTRUCTION JOINT
NOT TO SCALE

REINFORCING NOTES:

1. SEE ODOT DETAIL 1603 FOR LAPPING METHOD

2. USE REINFORCING STEEL CONFORMING TO ASTM A706 OR AASHTO M31 (ASTM A615) GRADE 60. USE FULL LENGTH BARS AS SHOWN, AND PLACE THEM A MINIMUM 2" CLEAR OF THE NEAREST FACE OF CONCRETE.

City of St. Helens
FOUNDED 1850

REGISTERED PROFESSIONAL ENGINEER
72,629
OREGON
JUNE 11, 2008
KEITH BUISMAN
PRELIMINARY
EXPIRES: 12/31/2023

Otak
Otak, Inc.
808 SW Third Avenue, Ste. 800
Portland, OR 97204
503. 287. 6825
www.otak.com

S. 1ST AND STRAND STREETS ROAD AND UTILITY EXTENSIONS
ST. HELENS, OREGON
CONCRETE REINFORCEMENT PLANS
COWLITZ STREET

TITLE

#	DATE	DESCRIPTION

REVISIONS

NAVD88
DATUM

OTAK CAD — KJB
DRAWN BY — CHECKED BY

90% PLANS
STATUS

JANUARY 10, 2022
DATE

19823
PROJECT NUMBER

2K-2

© 2021 OTAK, INC.

If this drawing is not 22" x 34", it has been reduced/enlarged. Scale accordingly.

Plotted: Jan 10, 2022 - 6:48pm keith.buisman L:\Project\19800\19823\CADD\ACAD\Dwg\C19823c2k.dwg Layout Name: 2K-2

GENERAL NOTES

PROVIDE ALL MATERIALS AND PERFORM ALL WORK ACCORDING TO THE OREGON STANDARD SPECIFICATIONS FOR CONSTRUCTION 2021.

WALL EXTENSION DESIGNED IN ACCORDANCE WITH THE 9TH EDITION OF THE AASHTO LRFD BRIDGE DESIGN SPECIFICATIONS FOR A SOIL UNIT WEIGHT OF 135 PCF WITH AT-REST LATERAL EARTH COEFFICIENT OF 0.41 AND THE FOLLOWING LIVE LOADS:

SERVICE AND STRENGTH I LIMIT STATE:
- 90 PSF PEDESTRIAN LIVE LOAD
- 250 PSF CONSTRUCTION SURCHARGE

PROVIDE REINFORCING STEEL CONFORMING TO AASHTO M31 (ASTM A615), GRADE 60. THE FOLLOWING SPLICE LENGTHS SHALL BE USED (UNLESS SHOWN OTHERWISE):

REINFORCING SPLICE LENGTHS (CLASS B) GRADE 60 f'c = 3.3 KSI, A_{tr}=0.4, 2 IN. MIN CONCRETE CLEAR COVER										
BAR SIZE	#3	#4	#5	#6	#7	#8	#9	#10	#11	#14 & #18
UNCOATED	1'-4"	1'-9"	2'-2"	2'-7"	3'-0"	3'-5"	3'-10"	4'-4"	4'-10"	NOT PERMITTED

SPLICE REINFORCING STEEL AT ALTERNATE BARS, STAGGERED AT LEAST ONE SPLICE LENGTH OR AS FAR AS POSSIBLE, UNLESS SHOWN OTHERWISE.

PROVIDE GENERAL STRUCTURAL CONCRETE CLASS 3300 - 1 $\frac{1}{2}$", 1", OR $\frac{3}{4}$" FOR WALL.

PROVIDE GENERAL FINISH FOR ALL EXPOSED CONCRETE SURFACES.

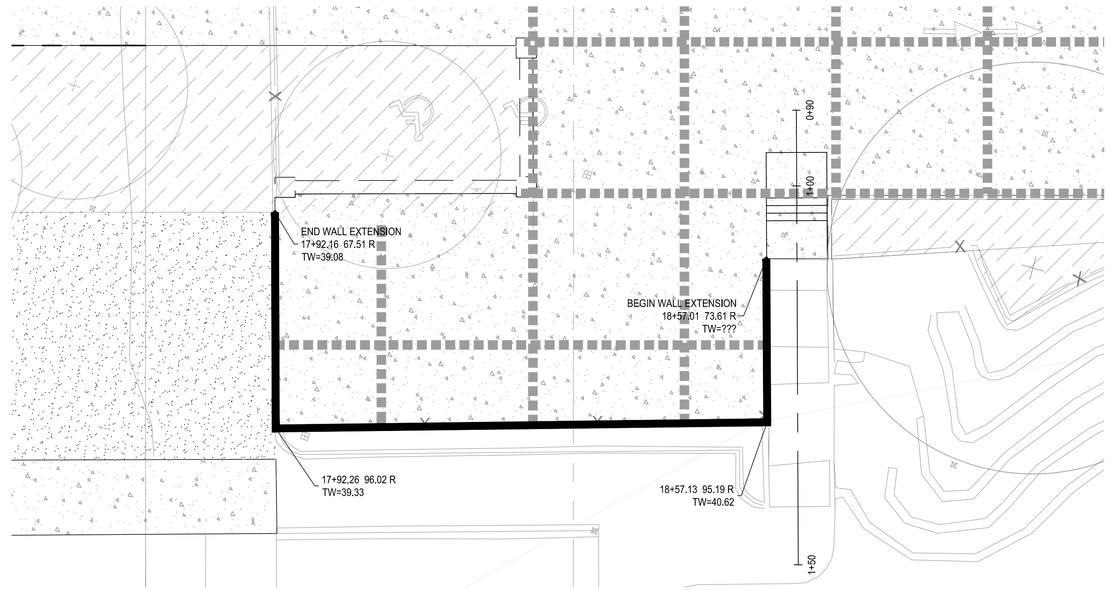

WALL EXTENSION PLAN

0 10 20
SCALE IN FEET

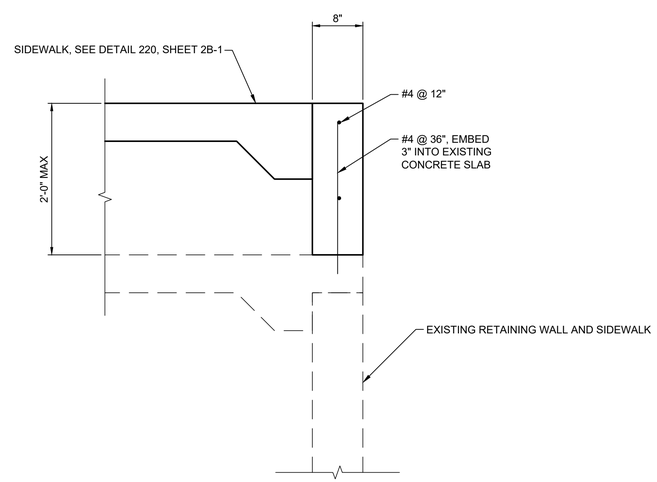

WALL EXTENSION DETAIL

SCALE: 1"=1'-0"

City of St. Helens FOUNDED 1850

REGISTERED PROFESSIONAL ENGINEER 72,629 OREGON JUNE 11, 2008 KEITH BUISMAN

PRELIMINARY

EXPIRES: 12/31/2023

Otak

Otak, Inc.
808 SW Third Avenue, Ste. 800
Portland, OR 97204
503. 287. 6825
www.otak.com

S. 1ST AND STRAND STREETS ROAD AND UTILITY EXTENSIONS

ST. HELENS, OREGON
STRUCTURAL PLANS

WALL EXTENSION PLAN AND DETAILS

TITLE		
#	DATE	DESCRIPTION

REVISIONS

NAVD88
DATUM

OTAK CAD
DRAWN BY — CHECKED BY

90% PLANS
STATUS

JANUARY 10, 2022
DATE

19823
PROJECT NUMBER

2L-1

© 2021 OTAK, INC.

If this drawing is not 22" x 34", it has been reduced/enlarged. Scale accordingly.

Plotted: Jan 10, 2022 - 6:52am, keith.buisman L:\Projects\19800\19823\CADD\ACAD\Dwg\C19823100.dwg Layout Name: 2L-1

CAST-IN-PLACE CONCRETE
CONCRETE WORK SHALL CONFORM TO ACI 301 "SPECIFICATIONS FOR STRUCTURAL CONCRETE".

CONTRACTOR TO SUBMIT ALL MIX DESIGNS REQUIRED BY ACI 301 SECTIONS 4.2.1.
CONTRACTOR TO VERIFY CONCRETE STRENGTHS BY STANDARD 28-DAY CYLINDER TESTS PER ASTM C39. CONTRACTOR TO USE THE FOLLOWING MIX DESIGN REQUIREMENTS

FOOTINGS AND FLOOR SLABS
F'C = 4000 PSI, 28 DAY STRENGTH
1 INCH MAXIMUM AGGREGATE
0.5 MAXIMUM WATER/CEMENT RATIO

HIGHER WATER/CEMENT RATIOS THAN SHOWN ABOVE MAY BE USED IF SUBSTANTIATED IN ACCORDANCE WITH ACI 318-14, CHAPTER 19.

FLY ASH CONFORMING TO ASTM C845 MAY BE USED TO REPLACE UP TO 20% OF THE CEMENT CONTENT, PROVIDED THAT THE MIX STRENGTH IS SUBSTANTIATED BY TEST DATA.

THE CONTRACTOR SHALL SUBMIT CONCRETE MIX DESIGNS AS OUTLINED ABOVE, ALONG WITH TEST DATA AS REQUIRED, A MINIMUM OF TWO WEEKS PRIOR TO PLACING CONCRETE.

SLEEVES, OPENINGS, CONDUIT, AND OTHER EMBEDDED ITEMS NOT SHOWN ON THE STRUCTURAL DRAWINGS SHALL BE APPROVED BY THE ARCHITECT BEFORE POURING. CONDUITS EMBEDDED IN SLABS SHALL NOT BE LARGER IN OUTSIDE DIMENSION THAN ONE THIRD OF THE THICKNESS OF THE SLAB AND SHALL NOT BE SPACED CLOSER THAN THREE DIAMETERS ON CENTER. PROVIDE 3/4" CHAMFERS ON ALL EXPOSED CONCRETE EDGES UNLESS NOTED OTHERWISE.

CONCRETE REINFORCING
CONCRETE REINFORCING SHALL CONFORM TO ACI 301 "STANDARD SPECIFICATIONS FOR STRUCTURAL CONCRETE".

CONTRACTOR SHALL SUBMIT PLACING DRAWINGS SHOW FABRICATION DIMENSIONS AND LOCATIONS FOR PLACEMENT OF REINFORCEMENT AND REINFORCEMENT SUPPORTS.

MATERIALS
REINFORCING BARS SHALL CONFORM TO ASTM A615, GRADE 60, DEFORMED BARS AND ASTM A185 FOR SMOOTH WELDED WIRE FABRIC (WWF), UNLESS OTHERWISE NOTED. REINFORCING STEEL TO BE WELDED SHALL CONFORM TO ASTM A706. COLUMN SPIRALS SHALL BE PLAIN OR DEFORMED BARS CONFORMING TO ASTM A615, GRADE 60. REINFORCING STEEL SHALL BE SECURELY TIED IN PLACE WITH #16 ANNEALED IRON WIRE.

BARS IN SLABS SHALL BE SUPPORTED ON WELL-CURED CONCRETE BLOCKS OR APPROVED METAL CHAIRS, AS SPECIFIED BY THE CRSI MANUAL OF STANDARD PRACTICE, MSP-1. REINFORCING STEEL SHALL BE DETAILED IN ACCORDANCE WITH THE "ACI MANUAL OF STANDARD PRACTICE FOR DETAILING REINFORCED CONCRETE STRUCTURES," ACI 315.
WELDING OF REINFORCING STEEL IS NOT PERMITTED.

UNLESS OTHERWISE NOTED ON PLANS, CONCRETE COVER SHALL BE:

USE	COVER
SLAB BARS	1" TOP COVER
FOOTING BARS	3" BOTTOM COVER
ALL OTHER LOCATIONS	1-1/2"

SPLICES
SPLICES SHALL CONFORM TO ACI 301, SECTION 3.3.2.7 "SPLICES". LAP SPLICES SHALL CONFORM TO THE TABLE BELOW:

REINFORCING SPLICE LENGTHS (CLASS B) GRADE 60					f'c = 4.0 ksi	
BAR SIZE	#3	#4	#5	#6	#7	#8
UNCOATED	2'-0"	2'-6"	3'-6"	4'-0"	5'-0"	5'-6"

CONCRETE ACCESSORIES:
PERMANENTLY EXPOSED EMBEDDED PLATES AND ANGLES SHALL BE HOT-DIPPED, GALVANIZED AFTER FABRICATION, UNLESS OTHERWISE NOTED. NO LOADS OR WELDS SHALL BE PLACED ON EMBEDDED PLATES OR ANGLES FOR A MINIMUM OF 7 DAYS AFTER PAINTING.

STRUCTURAL STEEL
STRUCTURAL STEEL IS DESIGNED IN ACCORDANCE WITH THE AMERICAN INSTITUTE OF STEEL CONSTRUCTION (AISC) SPECIFICATIONS. CONSTRUCTIONS SHALL CONFORM TO CHAPTER 22 OF THE IBC. ALL STRUCTURAL STEEL EXPOSED TO WEATHER OR IN CONTACT WITH MOISTURE OR PARTIALLY BURIED SHOULD BE HOT DIP GALVANIZED.

MATERIALS
STRUCTURAL STEEL SHALL BE THE TYPES AND STRENGTHS LISTED BELOW:

STRUCTURAL BARS AND PLATES (PL)	ASTM A36	FY=36KSI
WELDING ELECTRODES	E70XX UNLESS OTHERWISE NOTED	

WELDING SHALL CONFORM TO AWS D1.1 AND VISUALLY CONFORM TO AWS SECTION 6 AND TABLE 6.1. WELDERS SHALL BE QUALIFIED FOR THE SPECIFIC PREQUALIFIED JOINTS REQUIRED BY THE DESIGN AND CERTIFIED IN ACCORDANCE WITH AWS REQUIREMENTS. WELDING SHALL BE DONE IN ACCORDANCE WITH APPROPRIATE WELD PROCEDURE SPECIFICATIONS (WPSS); WELDERS SHALL BE FAMILIAR WITH THE APPLICABLE WSPSS. WELDING SHALL BE DONE WITH AWS PREQUALIFIED WELDING PROCESSES UNLESS OTHERWISE APPROVED. WELDER QUALIFICATIONS AND WPSS SHALL BE MAINTAINED AT THE SITE OF THE WORK AND SHALL BE READILY AVAILABLE FOR INSPECTION UPON REQUEST, BOTH IN THE SHOP AND IN THE FIELD.

STRUCTURAL TESTS & SPECIAL INSPECTIONS

NOTE: ALL PERIODIC TESTS & INSPECTIONS ARE PERFORMED EITHER 50% OF EACH MATERIAL TYPE/GRADE OR 50% OF EACH ACTIVITY/ ACTIVITY TIME OR 50% OF AREA/LENGTH THAT SUITS THE TEST/INSPECTION.

TABLE 1704.3				
VERIFICATION AND INSPECTION	CONTINUOUS	PERIODIC	REFERENCE STANDARD	IBC REFERENCE
3. MATERIAL VERIFICATION OF STRUCTURAL STEEL:				
A. FOR STRUCTURAL STEEL, IDENTIFICATION MARKINGS TO CONFORM TO ALSC 360.	-	X	AISC 360, SECTION M5.5	
B. FOR OTHER STEEL, IDENTIFICATION MARKINGS TO CONFORM TO ASTM STANDARDS SPECIFIED IN THE APPROVED CONSTRUCTION DOCUMENTS.	-	X	APPLICABLE ASTM MATERIAL STANDARDS	
C. MANUFACTURER'S CERTIFIED TEST REPORTS.	-	X		
4. MATERIAL VERIFICATION OF WELD FILLER MATERIALS:				
A. IDENTIFICATION MARKINGS TO CONFORM TO AWS SPECIFICATION IN THE APPROVED CONSTRUCTION DOCUMENTS.	-	X	AISC 360, SECTION A3.5 AND APPLICABLE AWS A5 DOCUMENTS	
B. MANUFACTURER'S CERTIFICATE OF COMPLIANCE REQUIRED.	-	X		
5. INSPECTION OF WELDING:				
A. STRUCTURAL STEEL:				
1) COMPLETE AND PARTIAL JOINT PENETRATION GROOVE WELDS.	X	-	AWS D1.1	1704.3.1
5) SINGLE-PASS FILLET WELDS < 5/ 16"	-	X		
B.REINFORCING STEEL:				
1) REINFORCING STEEL.	-	X		

TABLE 1704.4				
VERIFICATION AND INSPECTION	CONTINUOUS	PERIODIC	REFERENCE STANDARD	IBC REFERENCE
1. INSPECTION OF REINFORCING STEEL AND PLACEMENT.	-	X	ACI 318: 3.5, 7.1-7.7	1913.4
5. VERIFYING USE OF REQUIRED DESIGN MIX.	X	-	ACI 318: CH. 4.5.2-5.4	1904.2.2, 1913.2, 1913.3
6. AT THE TIME FRESH CONCRETE IS SAMPLED TO FABRICATE SPECIMENS FOR STRENGTH TESTS, PERFORM SLUMP AND AIR CONTENT TESTS, AND DETERMINE THE TEMPERATURE OF THE CONCRETE.	X	-	ASTM C 172 ASTM C 31 ACI 318: 5.6, 5.8	1913.1
7. INSPECTION OF CONCRETE PLACEMENT FOR PROPER APPLICATION TECHNIQUES.	X	-	ACI 318: 5.9, 5.10	1913.6, 1913.7, 1913.8
8. INSPECTION FOR MAINTENANCE OF SPECIFIED CURING TEMPERATURE AND TECHNIQUES.	-	X	ACI 318: 5.11-5.13	1913.9
12. INSPECT FORMWORK FOR SHAPE. LOCATION AND DIMENSIONS OF THE CONCRETE MEMBER BEING FORMED.	-	X	ACI 318: 6.1.1	-

TABLE 1705.6 - SOILS		
VERIFICATION AND INSPECTION	CONTINUOUS	PERIODIC
1. VERIFY MATERIALS BELOW SHALLOW FOUNDATIONS ARE ADEQUATE TO ACHIEVE THE DESIGN BEARING CAPACITY.	–	X
2. VERIFY EXCAVATIONS ARE EXTENDED TO PROPER DEPTH AND HAVE REACHED PROPER MATERIAL.	–	X
3. PERFORM CLASSIFICATION AND TESTING OF COMPACTED FILL MATERIALS.	–	X
4. VERIFY USE OF PROPER MATERIALS. DENSITIES AND LIFT THICKNESSES DURING PLACEMENT AND COMPACTION OF COMPACTED FILL.	X	-
5. PRIOR TO PLACEMENT OF COMPACTED FILL, OBSERVE SUBGRADE AND VERIFY THAT SITE HAS BEEN PREPARED PROPERLY.	–	X

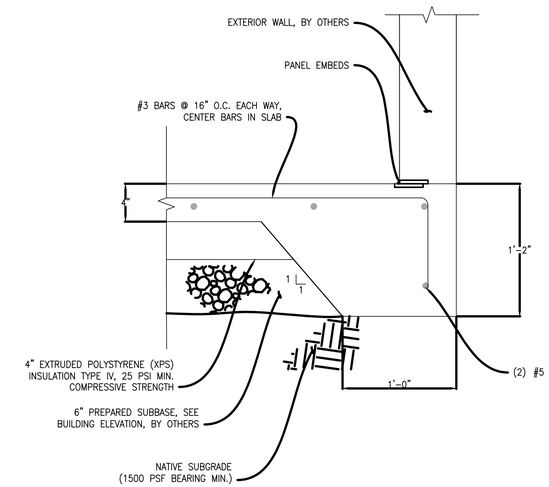

SLAB DETAIL
SCALE: 1 1/2" = 1'-0"

City of St. Helens FOUNDED 1850

REGISTERED PROFESSIONAL ENGINEER 72,629 OREGON JUNE 11, 2008 KEITH BUISMAN
PRELIMINARY
EXPIRES: 12/31/2023

Otak
Otak, Inc.
808 SW Third Avenue, Ste. 800
Portland, OR 97204
503. 287. 6825
www.otak.com

S. 1ST AND STRAND STREETS
ROAD AND UTILITY EXTENSIONS
ST. HELENS, OREGON
STRUCTURAL PLANS
PUMP STATION FOUNDATION DETAILS

TITLE

#	DATE	DESCRIPTION

REVISIONS

NAVD88
DATUM

OTAK CAD — KJB
DRAWN BY — CHECKED BY

90% PLANS
STATUS

JANUARY 10, 2022
DATE

19823
PROJECT NUMBER

2L-2

© 2021 OTAK, INC.

If this drawing is not 22" x 34", it has been reduced/enlarged. Scale accordingly.

Plotted: Jan 10, 2022-6:32am, keith.buisman L:\Proj\19800\19823\CADD\ACAD\Dwg\C19823T00.dwg Layout Name: PUMP STA FDN

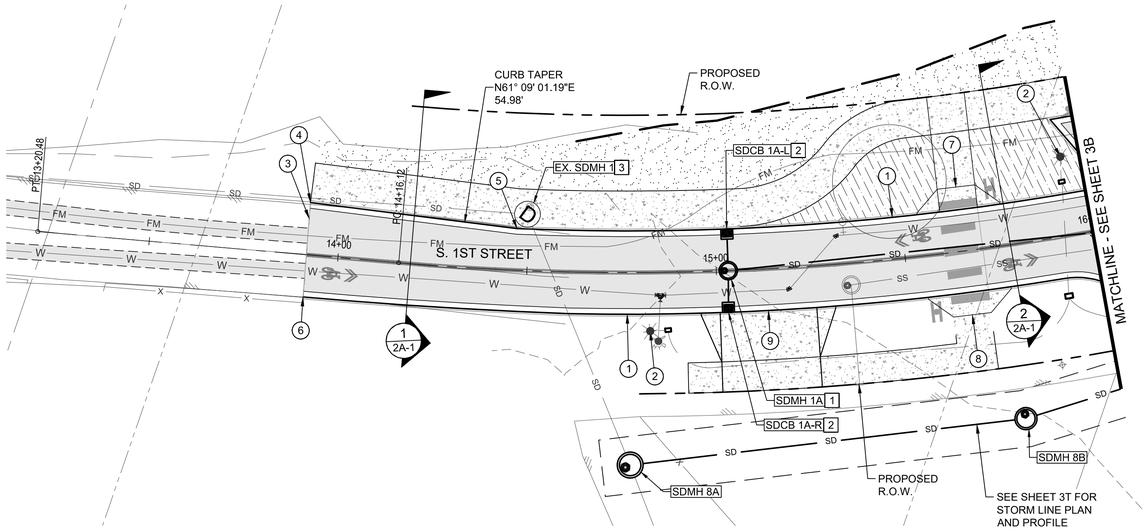

S. 1ST STREET STA 13+25 TO 16+00

0 20 40
SCALE IN FEET

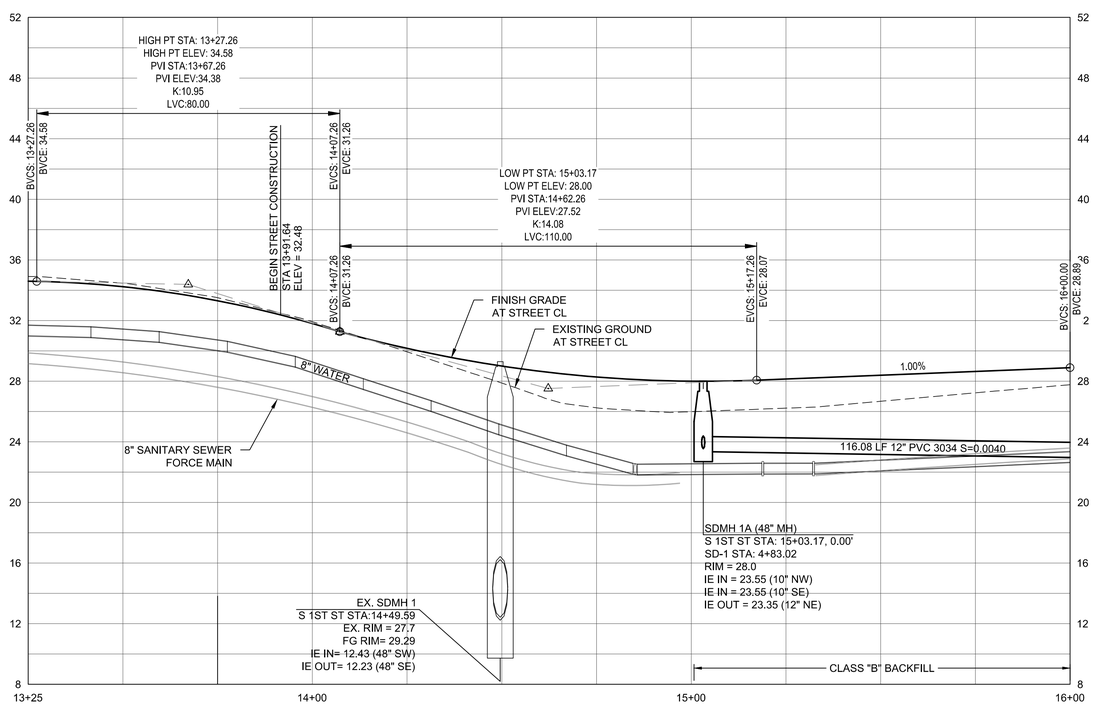

S. 1ST STREET STA 13+25 TO 16+00

HORZ 0 20 40
VERT 0 5 10
SCALE IN FEET

STREET CONSTRUCTION KEY NOTES

1. CONSTRUCT STANDARD MONOLITHIC CURB AND GUTTER PER CITY OF ST. HELENS STD DETAIL 200, SHEET 2B-1.
2. CONSTRUCT STREET LIGHT. SEE LIGHTING PLANS FOR DETAILS.
3. S. 1ST STREET STA 13+91.64
   SAWCUT AND REMOVE EXISTING AC PAVEMENT. BEGIN STREET CONSTRUCTION.
4. S. 1ST STREET STA 13+91.62, 13.82' LT
   BEGIN CURB CONSTRUCTION AND TAPER TO MATCH EXISTING.
5. S. 1ST STREET STA 14+46.96, 11.00' LT
   END TAPER.
6. S. 1ST STREET STA 13+91.73, 11.18' RT
   BEGIN CURB CONSTRUCTION AND TAPER TO MATCH EXISTING.
7. S. 1ST STREET STA 15+65.58, 11.00' LT
   CONSTRUCT PERPENDICULAR CURB RAMP PER ODOT STD DRAWING RD910, SHEET 2B-1. THROAT OPENING WIDTH=10 FEET. SEE SHEET 2H-1 FOR GRADING DETAILS.
8. S. 1ST STREET STA 15+65.73, 11.00' RT
   CONSTRUCT PERPENDICULAR CURB RAMP PER ODOT STD DRAWING RD910, SHEET 2B-1. THROAT OPENING WIDTH=10 FEET. SEE SHEET 2H-1 FOR GRADING DETAILS.
9. S. 1ST STREET STA 15+13.21, 11.00' RT
   CONSTRUCT DRIVEWAY APPROACH PER ODOT STD DRAWING RD740, SHEET 2B-1. THROAT OPENING WIDTH = 25 FEET. SEE SHEET 2H-1 FOR GRADING DETAILS.

STORM CONSTRUCTION KEY NOTES

1. CONSTRUCT MANHOLE PER CITY OF ST. HELENS STD DETAIL 350, SHEET 2B-3. SEE PROFILE FOR SIZE, RIM, AND INVERT INFORMATION.
2. CONSTRUCT CATCH BASIN PER CITY OF ST. HELENS STD DETAIL 315, SHEET 2B-3. SEE TABLE FOR INFORMATION.
3. ADJUST EXISTING MANHOLE RIM TO FINISH GRADE.

CATCH BASIN DATA					
NO.	STR STA./ OFFSET	TOC ELEV	IE OUT	LENGTH/ SIZE	SLOPE
SDCB 1A-L	S 1ST ST 15+03.17 11.00' L	28.0	23.77	11 LF 10" PVC 3034	0.020
SDCB 1A-R	S 1ST ST 15+02.83 11.00' R	27.7	23.77	11 LF 10" PVC 3034	0.020

City of St. Helens FOUNDED 1850

REGISTERED PROFESSIONAL ENGINEER 72,629 OREGON JUNE 11, 2008 KEITH BUISMAN
PRELIMINARY
EXPIRES: 12/31/2023

Otak
Otak, Inc.
808 SW Third Avenue, Ste. 800
Portland, OR 97204
503. 287. 6825
www.otak.com

S. 1ST AND STRAND STREETS ROAD AND UTILITY EXTENSIONS

ST. HELENS, OREGON
STREET AND STORM DRAIN PLAN AND PROFILE

S. 1ST STREET STA 13+25 TO 16+00

TITLE

.	DATE	DESCRIPTION

REVISIONS

NAVD88
DATUM

OTAK CAD KJB
DRAWN BY CHECKED BY

90% PLANS
STATUS

JANUARY 10, 2022
DATE

19823
PROJECT NUMBER

3A

© 2021 OTAK, INC.

If this drawing is not 22" x 34", it has been reduced/enlarged. Scale accordingly.

Plotted: Jan 10, 2022 - 10:06am, keith.buisman L:\Project\19800\19823\CAD\OACAD\Dwg\C1982323.dwg Layout Name: 3A

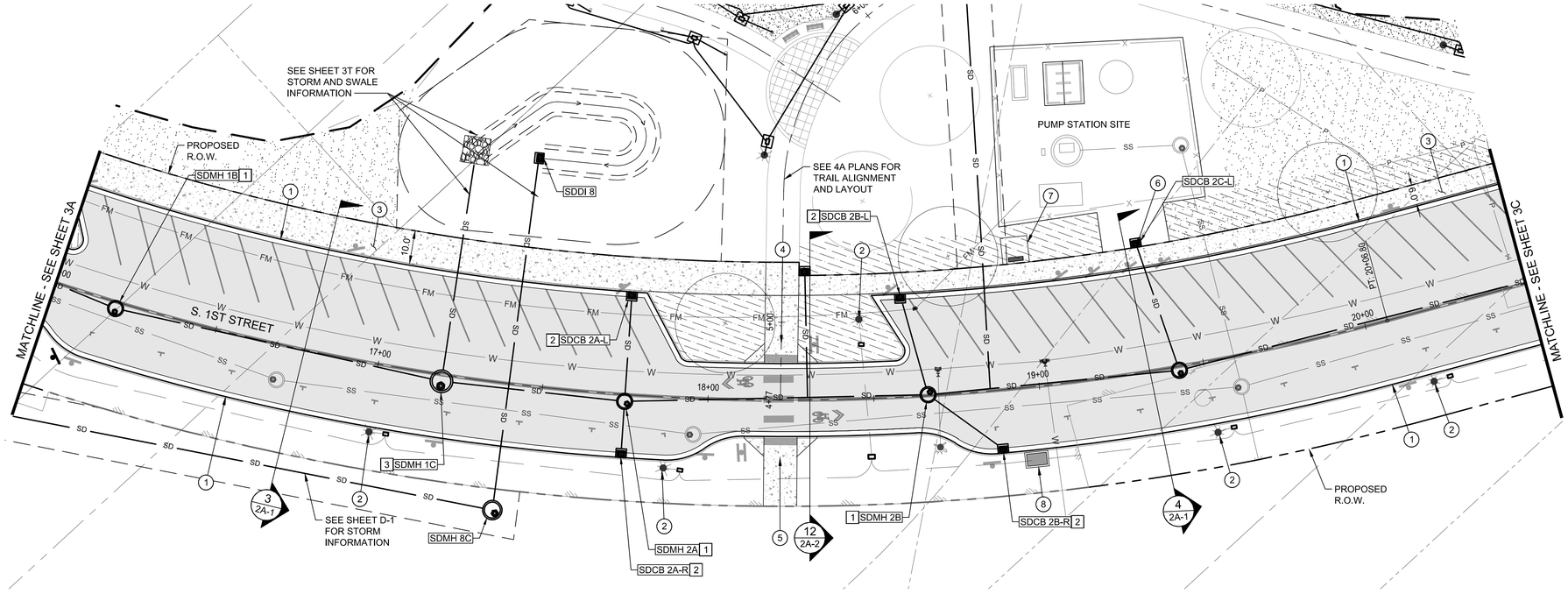

S. 1ST STREET STA 16+00 TO 20+50

SCALE IN FEET

STREET CONSTRUCTION KEY NOTES

1. CONSTRUCT STANDARD MONOLITHIC CURB AND GUTTER PER CITY OF ST. HELENS STD DETAIL 200, SHEET 2B-1.
2. CONSTRUCT STREET LIGHT. SEE LIGHTING PLANS FOR DETAILS.
3. CONSTRUCT SIDEWALK PER CITY OF ST. HELENS STD DETAIL 220, SHEET 2B-1. WIDTH PER PLAN DIMENSION.
4. S. 1ST STREET STA 18+22.00, 11.00' LT
   CONSTRUCT PERPENDICULAR CURB RAMP PER ODOT STD DRAWING RD910, SHEET 2B-1. THROAT OPENING WIDTH=10 FEET. SEE SHEET 2H-2 FOR GRADING DETAILS.
5. S. 1ST STREET STA 18+21.90, 11.00' RT
   CONSTRUCT PERPENDICULAR CURB RAMP PER ODOT STD DRAWING RD910, SHEET 2B-1. THROAT OPENING WIDTH=10 FEET. SEE SHEET 2H-2 FOR GRADING DETAILS.
6. S. 1ST STREET STA 18+52.02, 11.00' LT
   CONSTRUCT THICKENED SIDEWALK SECTION PER ODOT STD DRAWING RD740, SHEET 2B-1. THROAT OPENING WIDTH=25 FEET. SEE SHEET 2H-2 FOR GRADING DETAILS.
7. INSTALL PUD UT 3-PH BANK VAULT. REFER TO PUD PLANS FOR FURTHER INFORMATION.
8. INSTALL PUD UV SWITCH VAULT. REFER TO PUD PLANS FOR FURTHER INFORMATION.

STORM CONSTRUCTION KEY NOTES

1. CONSTRUCT MANHOLE PER CITY OF ST. HELENS STD DETAIL 350, SHEET 2B-3. SEE PROFILE FOR SIZE, RIM, AND INVERT INFORMATION.
2. CONSTRUCT CATCH BASIN PER CITY OF ST. HELENS STD DETAIL 315, SHEET 2B-3. SEE TABLE FOR INFORMATION.
3. CONSTRUCT WATER QUALITY MANHOLE PER CITY OF ST. HELENS STD DETAIL 355, SHEET 2B-4. SEE PROFILE FOR SIZE, RIM, AND INVERT INFORMATION.

CATCH BASIN DATA

NO.	STR STA./ OFFSET	TOC ELEV	IE OUT	LENGTH/ SIZE	SLOPE
SDCB 2A-L	S 1ST ST 17+75.00 31.00' L	28.4	26.07	33 LF 10" PVC 3034	0.097
SDCB 2A-R	S 1ST ST 17+75.00 19.00' R	28.4	23.19	17 LF 10" PVC 3034	0.020
SDCB 2B-L	S 1ST ST 18+59.45 31.00' L	28.6	25.84	31 LF 10" PVC 3034	0.089
SDCB 2B-R	S 1ST ST 18+87.44 19.00' R	29.2	23.59	27 LF 10" PVC 3034	0.020

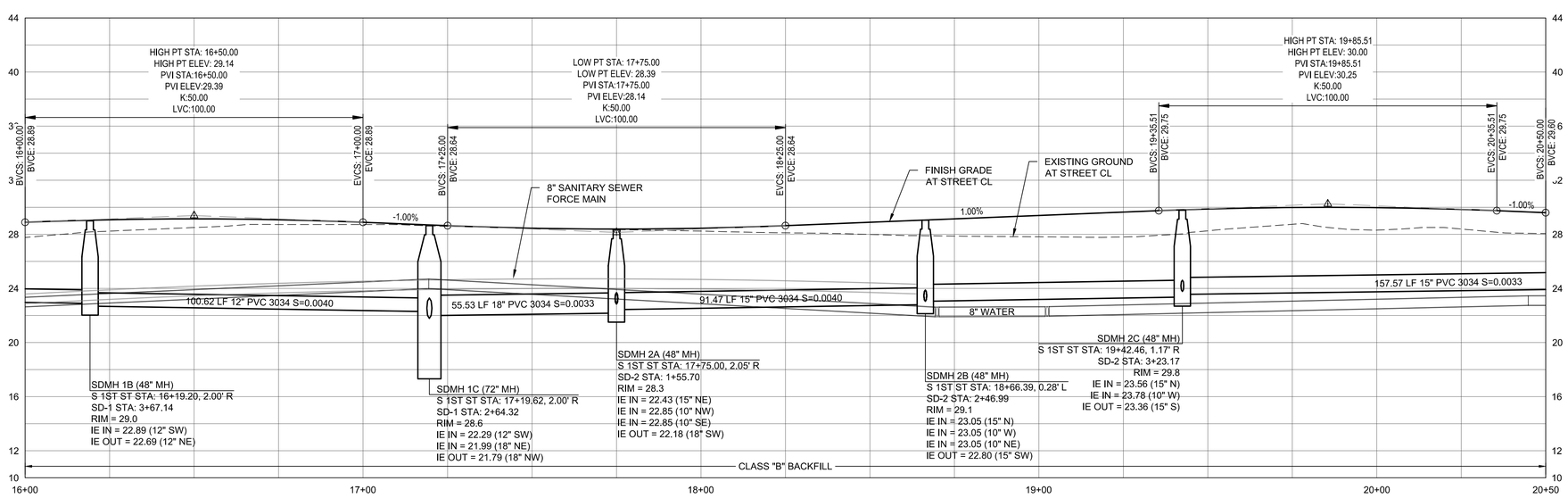

S. 1ST STREET STA 16+00 TO 20+50

HORZ 0 20 40

VERT 0 5 10

SCALE IN FEET

City of St. Helens FOUNDED 1850

REGISTERED PROFESSIONAL ENGINEER 72,629 OREGON JUNE 11, 2008 KEITH BUISMAN

PRELIMINARY

EXPIRES: 12/31/2023

Otak

Otak, Inc.
808 SW Third Avenue, Ste. 800
Portland, OR 97204
503. 287. 6825
www.otak.com

S. 1ST AND STRAND STREETS ROAD AND UTILITY EXTENSIONS

ST. HELENS, OREGON

STREET AND STORM DRAIN PLAN AND PROFILE

S. 1ST STREET STA 16+00 TO 20+50

TITLE

#	DATE	DESCRIPTION

REVISIONS

NAVD88
DATUM

OTAK CAD — KJB
DRAWN BY — CHECKED BY

90% PLANS
STATUS

JANUARY 10, 2022
DATE

19823
PROJECT NUMBER

3B

© 2021 OTAK, INC.

If this drawing is not 22" x 34", it has been reduced/enlarged. Scale accordingly.

Plotted: Jan 10, 2022 - 10:07pm keith.buisman L:\Project\19800\19823\CADD\ACAD\Dwg\C19823C3.dwg Layout Name: 3B

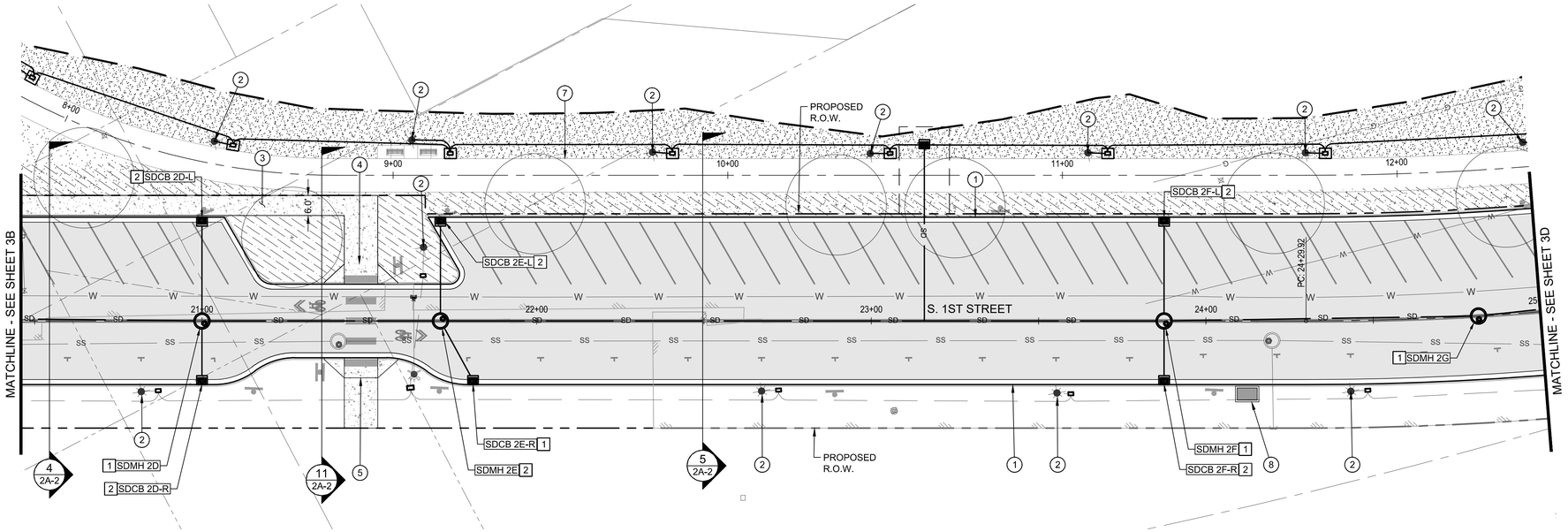

S. 1ST STREET STA 20+50 TO 25+00

0 20 40
SCALE IN FEET

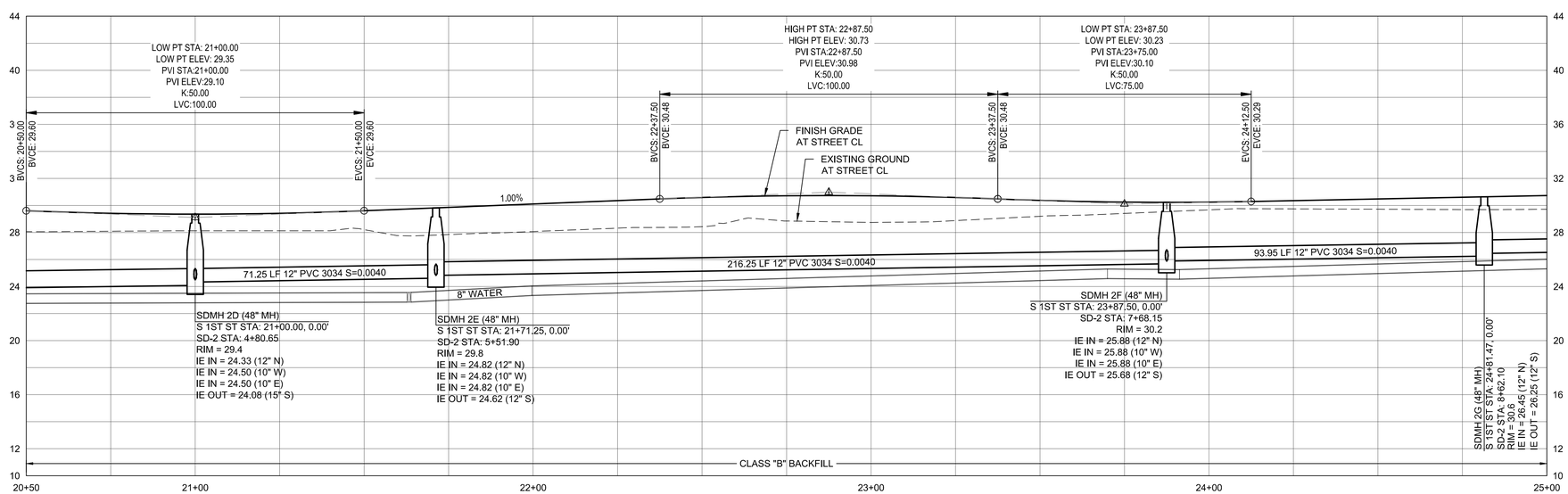

S. 1ST STREET STA 20+50 TO 25+00

HORZ 0 20 40
VERT 0 5 10
SCALE IN FEET

STREET CONSTRUCTION KEY NOTES

1. CONSTRUCT STANDARD MONOLITHIC CURB AND GUTTER PER CITY OF ST. HELENS STD DETAIL 200, SHEET 2B-1.
2. CONSTRUCT STREET LIGHT. SEE LIGHTING PLANS FOR DETAILS.
3. CONSTRUCT SIDEWALK PER CITY OF ST. HELENS STD DETAIL 220, SHEET 2B-1. WIDTH PER PLAN DIMENSION.
4. S. 1ST STREET STA 21+47.52, 11.00' LT
   CONSTRUCT PERPENDICULAR CURB RAMP PER ODOT STD DRAWING RD910, SHEET 2B-1. THROAT OPENING WIDTH=10 FEET. SEE SHEET 2H-3 FOR GRADING DETAILS.
5. S. 1ST STREET STA 21+47.52, 11.00' RT
   CONSTRUCT PERPENDICULAR CURB RAMP PER ODOT STD DRAWING RD910, SHEET 2B-1. THROAT OPENING WIDTH=10 FEET. SEE SHEET 2H-3 FOR GRADING DETAILS.
6. CONSTRUCT LANDSCAPE ISLAND. SEE LANDSCAPE PLANS FOR PLANTING DETAILS.
7. CONSTRUCT AC PATH. SEE SHEETS 4A FOR DETAILS.
8. INSTALL PUD UV SWITCH VAULT. REFER TO PUD PLANS FOR FURTHER INFORMATION.

STORM CONSTRUCTION KEY NOTES

1. CONSTRUCT MANHOLE PER CITY OF ST. HELENS STD DETAIL 350, SHEET 2B-3. SEE PROFILE FOR SIZE, RIM, AND INVERT INFORMATION.
2. CONSTRUCT CATCH BASIN PER CITY OF ST. HELENS STD DETAIL 315, SHEET 2B-3. SEE TABLE FOR INFORMATION.

CATCH BASIN DATA

NO.	STR STA./ OFFSET	TOC ELEV	IE OUT	LENGTH/ SIZE	SLOPE
SDCB 2D-L	S 1ST ST 21+00.00 31.00' L	29.0	25.12	31 LF 10" PVC 3034	0.020
SDCB 2D-R	S 1ST ST 21+00.00 19.00' R	29.3	24.88	19 LF 10" PVC 3034	0.020
SDCB 2E-L	S 1ST ST 21+71.25 31.00' L	29.4	25.44	31 LF 10" PVC 3034	0.020
SDCB 2E-R	S 1ST ST 21+80.99 19.00' R	29.9	25.21	20 LF 10" PVC 3034	0.020
SDCB 2F-L	S 1ST ST 23+87.50 31.00' L	29.9	26.50	31 LF 10" PVC 3034	0.020
SDCB 2F-R	S 1ST ST 23+87.50 19.00' R	30.2	26.26	19 LF 10" PVC 3034	0.020

City of St. Helens FOUNDED 1850

REGISTERED PROFESSIONAL ENGINEER 72,629 OREGON JUNE 11, 2008 KEITH BUISMAN
PRELIMINARY
EXPIRES: 12/31/2023

Otak
Otak, Inc.
808 SW Third Avenue, Ste. 800
Portland, OR 97204
503. 287. 6825
www.otak.com

S. 1ST AND STRAND STREETS ROAD AND UTILITY EXTENSIONS

ST. HELENS, OREGON
STREET AND STORM DRAIN PLAN AND PROFILE

S. 1ST STREET STA 20+50 TO 25+00

TITLE

#	DATE	DESCRIPTION

REVISIONS

NAVD88
DATUM

OTAK CAD KJB
DRAWN BY CHECKED BY

90% PLANS
STATUS

JANUARY 10, 2022
DATE

19823
PROJECT NUMBER

3C

© 2021 OTAK, INC.

If this drawing is not 22" x 34", it has been reduced/enlarged. Scale accordingly.

Plotted: Jan 10, 2022 - 10:07am keith.buisman L:\Project\19800\19823\CADD\ACAD\Dwg\C19823C3.dwg Layout Name: 3C

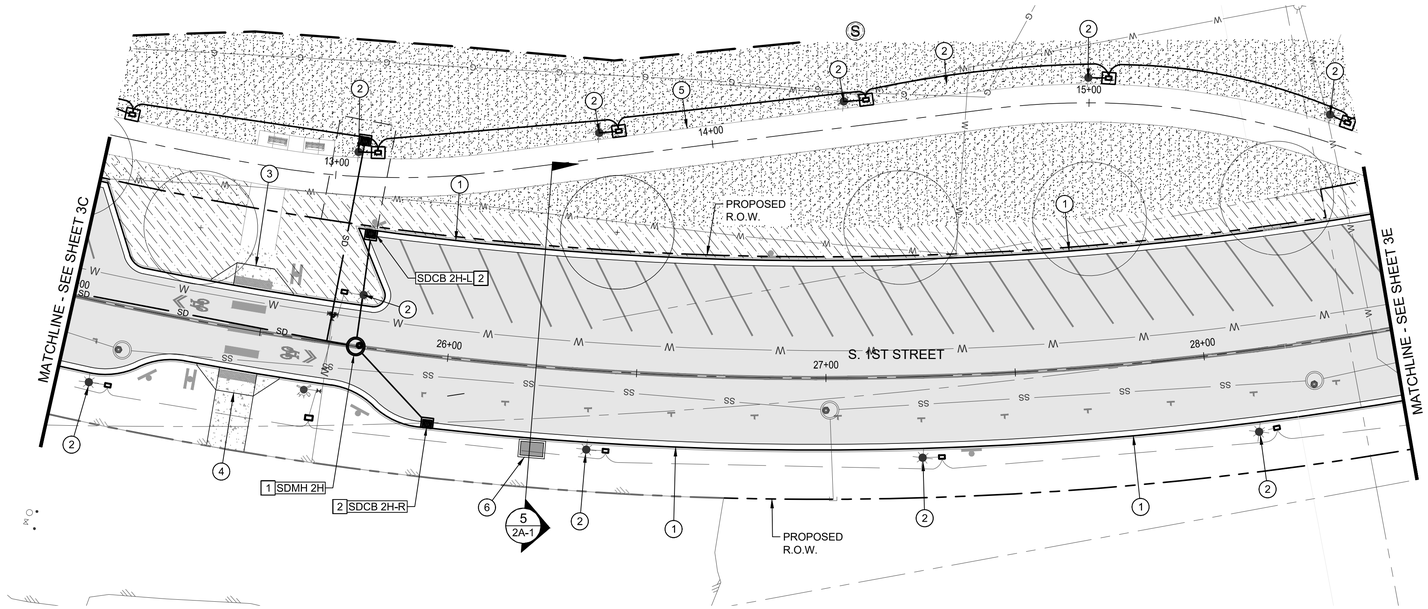

S. 1ST STREET STA 25+00 TO 28+50

0 20 40
SCALE IN FEET

STREET CONSTRUCTION KEY NOTES

1. CONSTRUCT STANDARD MONOLITHIC CURB AND GUTTER PER CITY OF ST. HELENS STD DETAIL 200, SHEET 2B-1.
2. CONSTRUCT STREET LIGHT. SEE LIGHTING PLANS FOR DETAILS.
3. S. 1ST STREET STA 25+45.94, 11.00' LT
   CONSTRUCT PERPENDICULAR CURB RAMP PER ODOT STD DRAWING RD910, SHEET 2B-1. THROAT OPENING WIDTH=10 FEET. SEE SHEET 2H-4 FOR GRADING DETAILS.
4. S. 1ST STREET STA 26+46.02, 11.00' RT
   CONSTRUCT PERPENDICULAR CURB RAMP PER ODOT STD DRAWING RD910, SHEET 2B-1. THROAT OPENING WIDTH=10 FEET. SEE SHEET 2H-4 FOR GRADING DETAILS.
5. CONSTRUCT AC PATH. SEE SHEETS 4A FOR DETAILS.
6. INSTALL PUD UV SWITCH VAULT. REFER TO PUD PLANS FOR FURTHER INFORMATION.

STORM CONSTRUCTION KEY NOTES

1. CONSTRUCT MANHOLE PER CITY OF ST. HELENS STD DETAIL 350, SHEET 2B-3. SEE PROFILE FOR SIZE, RIM, AND INVERT INFORMATION.
2. CONSTRUCT CATCH BASIN PER CITY OF ST. HELENS STD DETAIL 315, SHEET 2B-3. SEE TABLE FOR INFORMATION.

CATCH BASIN DATA

NO.	STR STA./ OFFSET	TOC ELEV	IE OUT	LENGTH/ SIZE	SLOPE
SDCB 2H-L	S 1ST ST 25+75.51 31.00' L	30.8	27.65	31 LF 10" PVC 3034	0.020
SDCB 2H-R	S 1ST ST 25+96.51 19.00' R	31.2	27.56	26 LF 10" PVC 3034	0.020

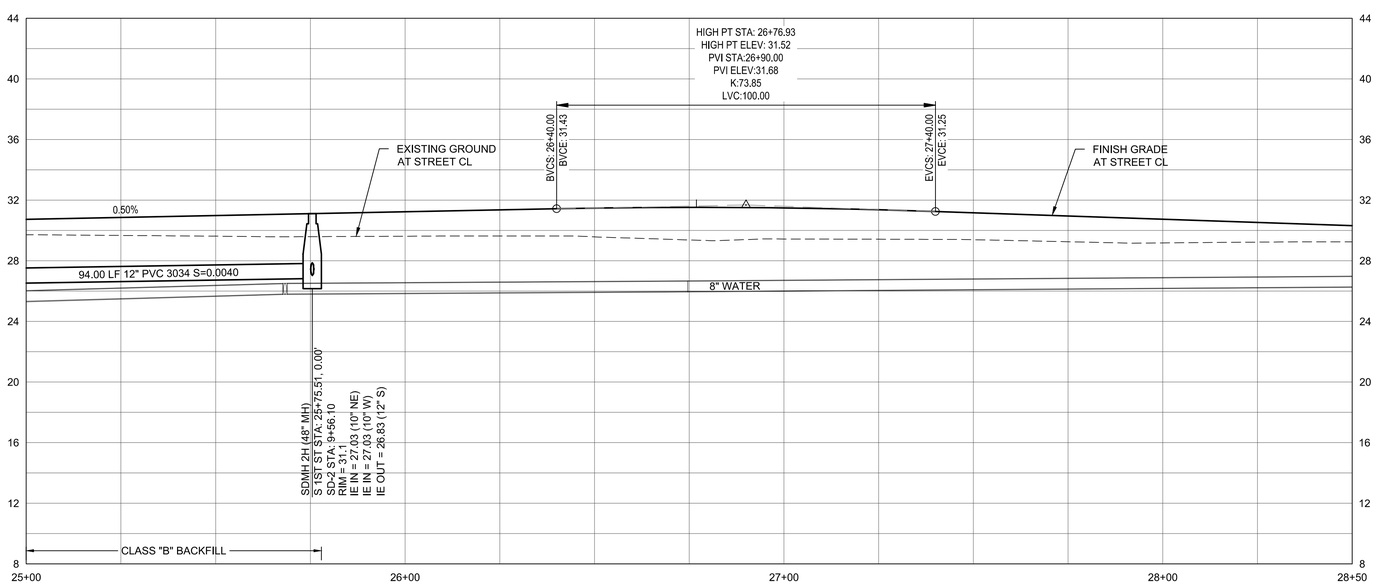

S. 1ST STREET STA 25+00 TO 28+50

HORZ 0 20 40
VERT 0 5 10
SCALE IN FEET

City of St. Helens FOUNDED 1850

REGISTERED PROFESSIONAL ENGINEER 72,629 OREGON JUNE 11, 2008 KEITH BUISMAN
PRELIMINARY
EXPIRES: 12/31/2023

Otak
Otak, Inc.
808 SW Third Avenue, Ste. 800
Portland, OR 97204
503. 287. 6825
www.otak.com

S. 1ST AND STRAND STREETS ROAD AND UTILITY EXTENSIONS

ST. HELENS, OREGON
STREET AND STORM DRAIN PLAN AND PROFILE

S. 1ST STREET STA 25+00 TO 28+50

TITLE

#	DATE	DESCRIPTION

REVISIONS

NAVD88
DATUM

OTAK CAD — KJB
DRAWN BY — CHECKED BY

90% PLANS
STATUS

JANUARY 10, 2022
DATE

19823
PROJECT NUMBER

3D

© 2021 OTAK, INC.

If this drawing is not 22" x 34", it has been reduced/enlarged. Scale accordingly.

Plotted: Jan 10, 2022 - 10:08am, keith.buisman L:\Project\19820\19823\CADD\ACAD\Dwg\C1982323.dwg Layout Name: 3D

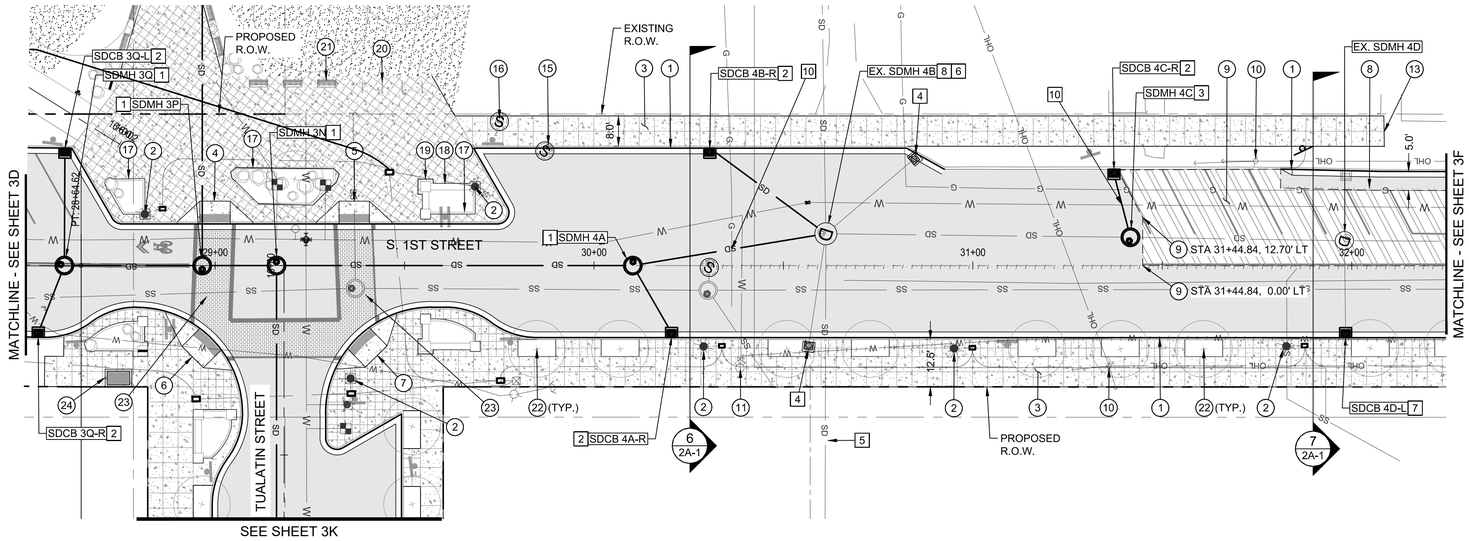

S. 1ST STREET STA 28+50 TO 32+25

SCALE IN FEET

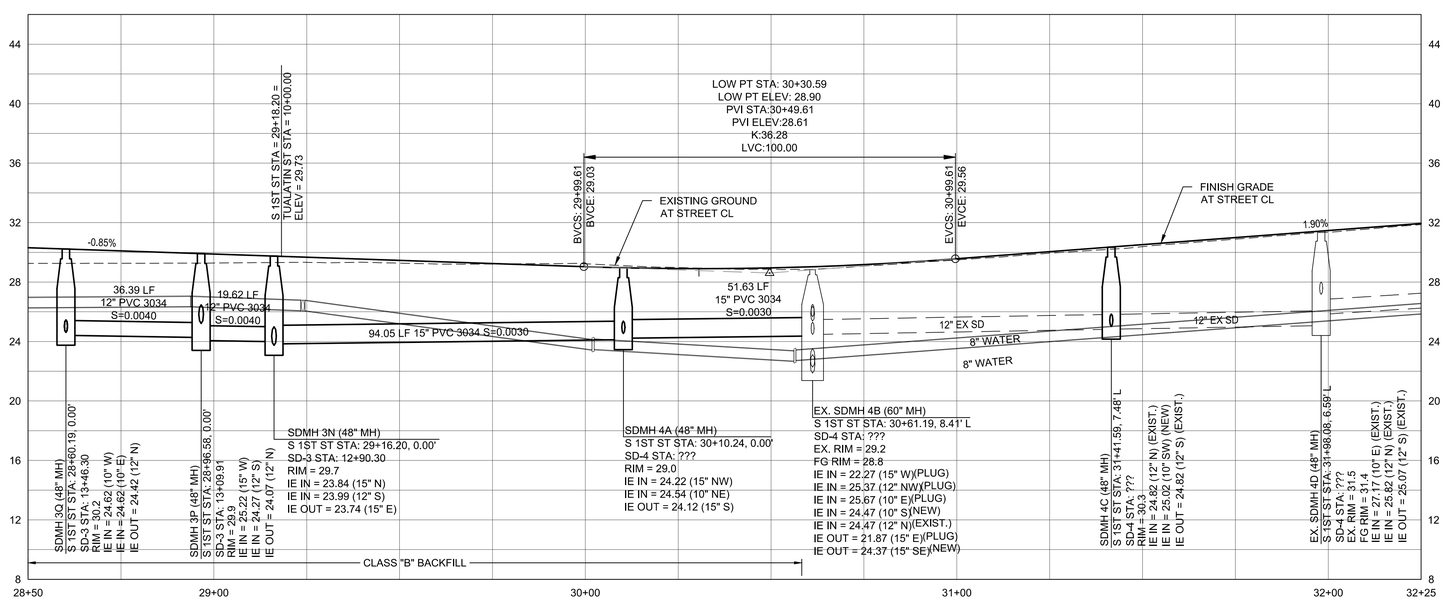

S. 1ST STREET STA 28+50 TO 32+25

HORZ 0 20 40

VERT 0 5 10

SCALE IN FEET

STREET CONSTRUCTION KEY NOTES

1. CONSTRUCT STANDARD MONOLITHIC CURB AND GUTTER PER CITY OF ST. HELENS STD DETAIL 200, SHEET 2B-1.
2. CONSTRUCT STREET LIGHT. SEE LIGHTING PLANS FOR DETAILS.
3. CONSTRUCT SIDEWALK PER CITY OF ST. HELENS STD DETAIL 220, SHEET 2B-1. WIDTH PER PLAN DIMENSION.
4. S. 1ST STREET STA 28+99.96, 11.00' LT
   CONSTRUCT PERPENDICULAR CURB RAMP PER ODOT STD DRAWING RD910, SHEET 2B-1. THROAT OPENING WIDTH=8 FEET. SEE SHEET 2H-5 FOR GRADING DETAILS.
5. S. 1ST STREET STA 29+36.70, 11.00' LT
   CONSTRUCT PERPENDICULAR CURB RAMP PER ODOT STD DRAWING RD910, SHEET 2B-1. THROAT OPENING WIDTH=8 FEET. SEE SHEET 2H-5 FOR GRADING DETAILS.
6. S. 1ST STREET STA 28+99.00, 19.20' RT
   CONSTRUCT PERPENDICULAR CURB RAMP PER ODOT STD DRAWING RD916, SHEET 2B-1. THROAT OPENING WIDTH=8 FEET. SEE SHEET 2F-1 FOR GRADING DETAILS.
7. S. 1ST STREET STA 29+37.64, 18.96' RT
   CONSTRUCT PERPENDICULAR CURB RAMP PER ODOT STD DRAWING RD916, SHEET 2B-1. THROAT OPENING WIDTH=8 FEET. SEE SHEET 2F-2 FOR GRADING DETAILS.
8. SAWCUT EXISTING PAVEMENT.
9. GRIND AND INLAY EXISTING PAVEMENT (2" THICK).
10. POWER POLE TO BE REMOVED WITH UNDERGROUNDING.
11. RELOCATE EXISTING FIRE HYDRANT TO PROPOSED LANDSCAPE STRIP. REMOVING EXISTING FIRE HOSE SHED.
12. REMOVE EXISTING CONCRETE PLANTER.
13. S. 1ST STREET STA 32+08.54
    MATCH EXISTING SIDEWALK.
14. REMOVE EXISTING CURB LINE.
15. ADJUST EXISTING MANHOLE RIM TO PROPOSED GRADE. MAJOR ADJUSTMENT TO MANHOLE, ROTATE CONE.
16. ADJUST EXISTING MANHOLE RIM TO PROPOSED GRADE.
17. CONSTRUCT CONCRETE CURB PLANTER. SEE LANDSCAPE PLANS FOR DETAILS.
18. CONSTRUCT STONE VENEER SEAT WALL. SEE LANDSCAPE PLANS FOR DETAILS.
19. CONSTRUCT STONE VENEER COLUMN. SEE LANDSCAPE PLANS FOR DETAILS.
20. INSTALL BIKE RACK. SEE LANDSCAPE PLANS FOR DETAILS.
21. INSTALL BENCH. SEE LANDSCAPE PLANS FOR DETAILS.
22. INSTALL TREE WELL. SEE LANDSCAPE PLANS FOR DETAILS.
23. INSTALL ENNIS-FLINT TRAFFICPATTERNSXD IN BRICK RED WITH STANDARD OFFSET BRICK PATTERN, OR APPROVED EQUAL. PROVIDE SUBMITTAL TO CITY FOR APPROVAL.
24. INSTALL PUD UV SWITCH VAULT. REFER TO PUD PLANS FOR FURTHER INFORMATION.

STORM CONSTRUCTION KEY NOTES

1. CONSTRUCT MANHOLE PER CITY OF ST. HELENS STD DETAIL 350, SHEET 2B-3. SEE PROFILE FOR SIZE, RIM, AND INVERT INFORMATION.
2. CONSTRUCT CATCH BASIN PER CITY OF ST. HELENS STD DETAIL 315, SHEET 2B-3. SEE TABLE FOR INFORMATION.
3. CONSTRUCT MANHOLE OVER EXISTING STORM LINE PER CITY OF ST. HELENS STD DETAIL 350, SHEET 2B-3. SEE PROFILE FOR SIZE, RIM, AND INVERT INFORMATION.
4. REMOVE EXISTING CATCH BASIN. REMOVE LEAD TO THE MANHOLE AND PLUG KNOCKOUT.
5. ABANDON EXISTING STORM LINE.
6. ADJUST EXISTING MANHOLE RIM TO PROPOSED GRADE.
7. REMOVE EXISTING CATCH BASIN. CONSTRUCT CATCH BASIN ON EXISTING LEAD PER CITY OF ST. HELENS STD DETAIL 315, SHEET 2B-3. SEE TABLE FOR INFORMATION.
8. CONNECT TO EXISTING STORM MANHOLE.
9. MAJOR ADJUSTMENT TO MANHOLE, ROTATE CONE.
10. POTHOLE EXISTING GAS LINE PRIOR TO STORM CONSTRUCTION.

CATCH BASIN DATA

NO.	STR STA./ OFFSET	TOC ELEV	IE OUT	LENGTH/ SIZE	SLOPE
SDCB 3Q-L	S 1ST ST 28+60.19 31.00' L	29.8	25.24	31 LF 10" PVC 3034	0.020
SDCB 3Q-R	S 1ST ST 28+53.50 19.00' R	30.3	24.98	18 LF 10" PVC 3034	0.020
SDCB 4A-R	S 1ST ST 30+20.48 19.00' R	28.9	24.92	19 LF 10" PVC 3034	0.020
SDCB 4B-R	S 1ST ST 30+30.56 31.00' L	28.6	25.23	38 LF 10" PVC 3034	0.020
SDCB 4C-R	S 1ST ST 31+37.25 25.43' L	29.7	27.07	16 LF 10" PVC 3034	0.130
SDCB 4D-L	S 1ST ST 31+98.40 19.00' R	31.4	28.47	26 LF 10" PVC 3034	0.051

City of St. Helens FOUNDED 1850

REGISTERED PROFESSIONAL ENGINEER 72,629 OREGON JUNE 11, 2008 KEITH BUISMAN

PRELIMINARY

EXPIRES: 12/31/2023

Otak

Otak, Inc.
808 SW Third Avenue, Ste. 800
Portland, OR 97204
503. 287. 6825
www.otak.com

S. 1ST AND STRAND STREETS ROAD AND UTILITY EXTENSIONS

ST. HELENS, OREGON
STREET AND STORM DRAIN PLAN AND PROFILE

S. 1ST STREET STA 28+50 TO 32+25

TITLE

#	DATE	DESCRIPTION

REVISIONS

NAVD88

DATUM

OTAK CAD KJB

DRAWN BY CHECKED BY

90% PLANS

STATUS

JANUARY 10, 2022

DATE

19823

PROJECT NUMBER

3E

© 2021 OTAK, INC.

If this drawing is not 22" x 34", it has been reduced/enlarged. Scale accordingly.

Plotted: Jan 10, 2022 - 10:08am keith.buisman L:\Project\19800\19823\CAD\ACAD\Dwg\C1982323.dwg Layout Name: 3E

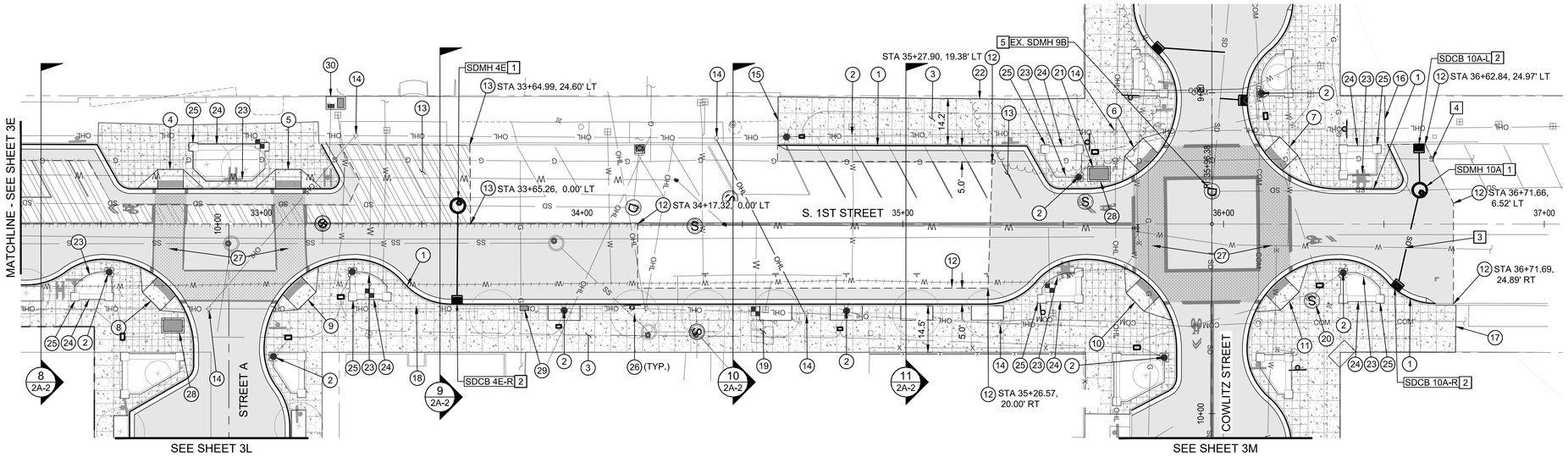

S. 1ST STREET STA 33+50 TO 37+00

0 20 40
SCALE IN FEET

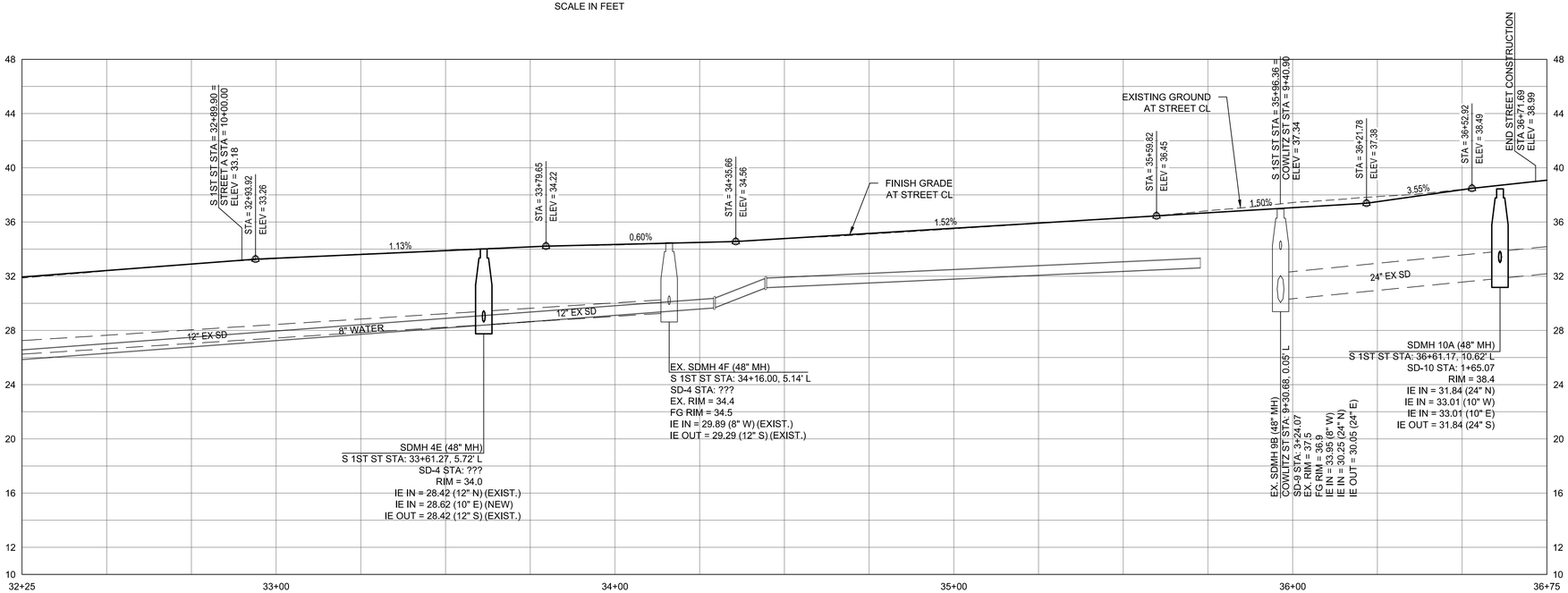

S. 1ST STREET STA 33+50 TO 37+00

HORZ 0 20 40
VERT 0 5 10
SCALE IN FEET

STREET CONSTRUCTION KEY NOTES

1. CONSTRUCT STANDARD MONOLITHIC CURB AND GUTTER PER CITY OF ST. HELENS STD DETAIL 200, SHEET 2B-1.
2. CONSTRUCT STREET LIGHT. SEE LIGHTING PLANS FOR DETAILS.
3. CONSTRUCT SIDEWALK PER CITY OF ST. HELENS STD DETAIL 220, SHEET 2B-1. WIDTH PER PLAN DIMENSION.
4. S. 1ST STREET STA 32+71.67, 11.00' LT
   CONSTRUCT PERPENDICULAR CURB RAMP PER ODOT STD DRAWING RD910, SHEET 2B-1. THROAT OPENING WIDTH=8 FEET. SEE SHEET 2H-6 FOR GRADING DETAILS.
5. S. 1ST STREET STA 33+08.40, 11.00' LT
   CONSTRUCT PERPENDICULAR CURB RAMP PER ODOT STD DRAWING RD910, SHEET 2B-1. THROAT OPENING WIDTH=8 FEET. SEE SHEET 2H-6 FOR GRADING DETAILS.
6. S. 1ST STREET STA 35+76.94, 19.04' LT
   CONSTRUCT PERPENDICULAR CURB RAMP PER ODOT STD DRAWING RD910, SHEET 2B-1. THROAT OPENING WIDTH=8 FEET. SEE SHEET 2F-5 FOR GRADING DETAILS.
7. S. 1ST STREET STA 36+15.35, 19.51' LT
   CONSTRUCT PERPENDICULAR CURB RAMP PER ODOT STD DRAWING RD910, SHEET 2B-1. THROAT OPENING WIDTH=8 FEET. SEE SHEET2F-6 FOR GRADING DETAILS.
8. S. 1ST STREET STA 32+70.71, 19.16' RT
   CONSTRUCT PERPENDICULAR CURB RAMP PER ODOT STD DRAWING RD916, SHEET 2B-1. THROAT OPENING WIDTH=8 FEET. SEE SHEET 2F-4 FOR GRADING DETAILS.
9. S. 1ST STREET STA 33+09.34, 18.92' RT
   CONSTRUCT PERPENDICULAR CURB RAMP PER ODOT STD DRAWING RD916, SHEET 2B-1. THROAT OPENING WIDTH=8 FEET. SEE SHEET 2F-3 FOR GRADING DETAILS.
10. S. 1ST STREET STA 35+77.42, 19.36' RT
    CONSTRUCT PERPENDICULAR CURB RAMP PER ODOT STD DRAWING RD916, SHEET 2B-1. THROAT OPENING WIDTH=8 FEET. SEE SHEET 2F-8 FOR GRADING DETAILS.
11. S. 1ST STREET STA 36+15.82, 18.89' RT
    CONSTRUCT PERPENDICULAR CURB RAMP PER ODOT STD DRAWING RD916, SHEET 2B-1. THROAT OPENING WIDTH=8 FEET. SEE SHEET 2F-7 FOR GRADING DETAILS.
12. SAWCUT EXISTING PAVEMENT.
13. GRIND AND INLAY EXISTING PAVEMENT (2" THICK).
14. POWER POLE TO BE REMOVED WITH UNDERGROUNDING.
15. S. 1ST STREET STA 34+61.12
    MATCH EXISTING SIDEWALK.
16. S. 1ST STREET STA 36+50.31
    MATCH EXISTING SIDEWALK.
17. S. 1ST STREET STA 36+72.36
    MATCH EXISTING SIDEWALK.
18. REMOVE EXISTING CURB LINE.
19. REMOVE EXISTING PUMP STATION.
20. ADJUST EXISTING MANHOLE RIM TO PROPOSED GRADE.
21. TRIM/LIMB UP TREE WITHIN RIGHT-OF-WAY FOR STREET LIGHT POLE CLEARANCE AND INSTALLATION.
22. PROTECT EXISTING LANDSCAPE WALL AT EDGE OF SIDEWALK.
23. CONSTRUCT CONCRETE CURB PLANTER. SEE LANDSCAPE PLANS FOR DETAILS.
24. CONSTRUCT STONE VENEER SEAT WALL.SEE LANDSCAPE PLANS FOR DETAILS.
25. CONSTRUCT STONE VENEER COLUMN.SEE LANDSCAPE PLANS FOR DETAILS.
26. INSTALL TREE WELL.SEE LANDSCAPE PLANS FOR DETAILS.
27. INSTALL ENNIS-FLINT TRAFFICPATTERNSXD IN BRICK RED WITH STANDARD OFFSET BRICK PATTERN, OR APPROVED EQUAL. PROVIDE SUBMITTAL TO CITY FOR APPROVAL.
28. INSTALL PUD UV SWITCH VAULT. REFER TO PUD PLANS FOR FURTHER INFORMATION.
29. INSTALL PUD METER. REFER TO PUD PLANS FOR FURTHER INFORMATION.
30. INSTALL PUD UT 1-PH BANK VAULT. REFER TO PUD PLANS FOR FURTHER INFORMATION.

STORM CONSTRUCTION KEY NOTES

1. CONSTRUCT MANHOLE OVER EXISTING STORM LINE PER CITY OF ST. HELENS STD DETAIL 350, SHEET 2B-3. SEE PROFILE FOR SIZE, RIM, AND INVERT INFORMATION.
2. CONSTRUCT CATCH BASIN PER CITY OF ST. HELENS STD DETAIL 315, SHEET 2B-3. SEE TABLE FOR INFORMATION.
3. POTHOLE EXISTING WATER LINE PRIOR TO STORM CONSTRUCTION.
4. POTHOLE EXISTING GAS LINE PRIOR TO STORM CONSTRUCTION.
5. ADJUST EXISTING MANHOLE RIM TO PROPOSED GRADE.

CATCH BASIN DATA

NO.	STR STA./ OFFSET	TOC ELEV	IE OUT	LENGTH/ SIZE	SLOPE
SDCB 4E-R	S 1ST ST 33+61.04 25.00' R	33.9	29.23	31 LF 10" PVC 3034	0.020
SDCB 10A-L	S 1ST ST 36+60.92 24.96' L	37.6	33.30	14 LF 10" PVC 3034	0.020
SDCB 10A-R	S 1ST ST 36+53.40 20.13' R	38.0	33.46	30 LF 10" PVC 3034	0.015

City of St. Helens FOUNDED 1850

REGISTERED PROFESSIONAL ENGINEER 72,629 OREGON JUNE 11, 2008 KEITH BUISMAN
PRELIMINARY
EXPIRES: 12/31/2023

Otak
Otak, Inc.
808 SW Third Avenue, Ste. 800
Portland, OR 97204
503. 287. 6825
www.otak.com

S. 1ST AND STRAND STREETS ROAD AND UTILITY EXTENSIONS

ST. HELENS, OREGON
STREET AND STORM DRAIN PLAN AND PROFILE

S. 1ST STREET STA 32+25 TO 37+00

TITLE

#	DATE	DESCRIPTION

REVISIONS

NAVD88
DATUM

OTAK CAD KJB
DRAWN BY CHECKED BY

90% PLANS
STATUS

JANUARY 10, 2022
DATE

19823
PROJECT NUMBER

3F

© 2021 OTAK, INC.

If this drawing is not 22" x 34", it has been reduced/enlarged. Scale accordingly.

Plotted: Jan 10, 2022 - 10:09am keith.buisman L:\Project\19800\19823\CAD\CAD\Dwg\C19823C3.dwg Layout Name: 3F

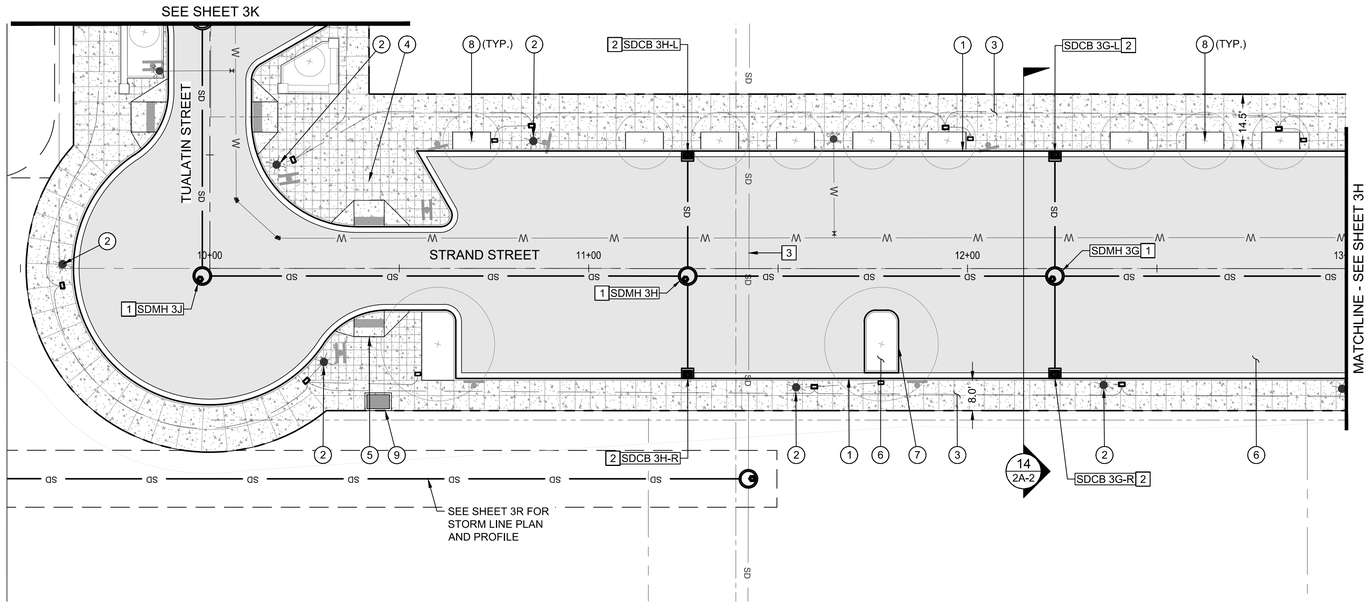

STRAND STREET STA 9+50 TO 13+00

0 20 40
SCALE IN FEET

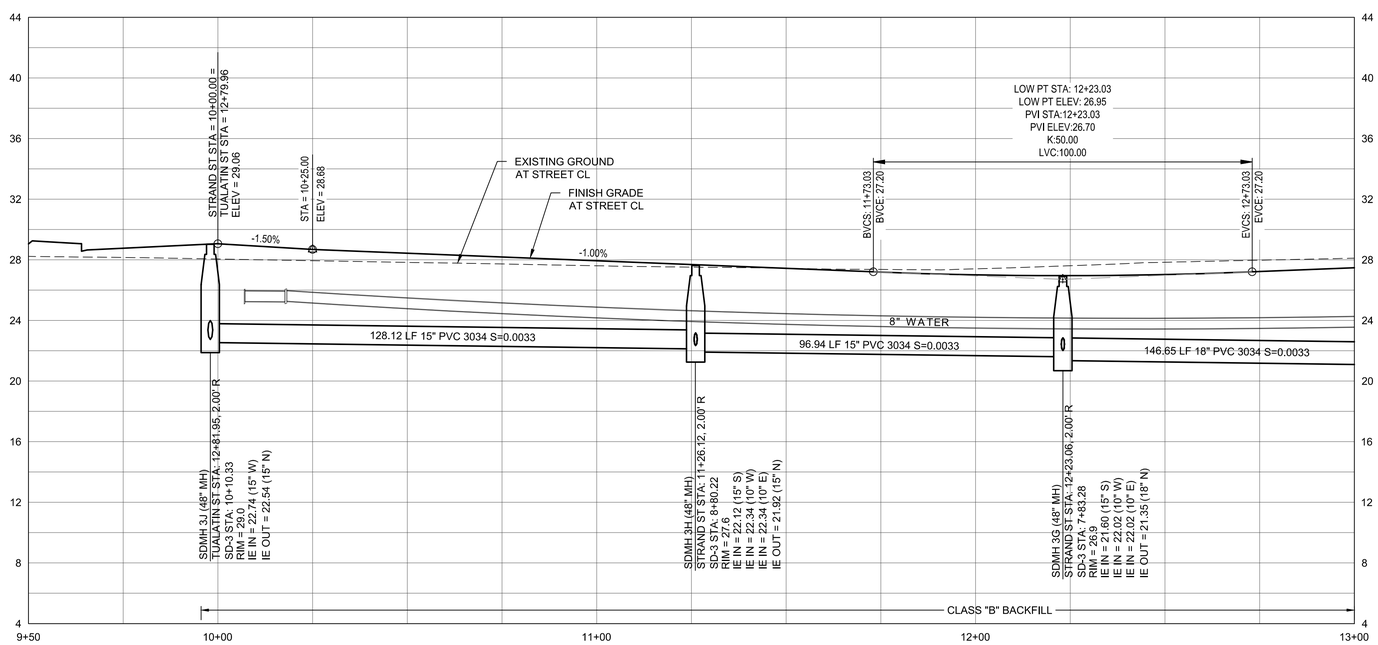

STRAND STREET STA 9+50 TO 13+00

HORZ 0 20 40
VERT 0 5 10
SCALE IN FEET

STREET CONSTRUCTION KEY NOTES

1. CONSTRUCT STANDARD MONOLITHIC CURB AND GUTTER PER CITY OF ST. HELENS STD DETAIL 200, SHEET 2B-1.
2. CONSTRUCT STREET LIGHT. SEE LIGHTING PLANS FOR DETAILS.
3. CONSTRUCT SIDEWALK PER CITY OF ST. HELENS STD DETAIL 220, SHEET 2B-1. WIDTH PER PLAN DIMENSION.
4. STRAND STREET STA 10+42.03, 11.00' LT
   CONSTRUCT PERPENDICULAR CURB RAMP PER ODOT STD DRAWING RD916, SHEET 2B-1. THROAT OPENING WIDTH=8 FEET. SEE SHEET 2F-13 FOR GRADING DETAILS.
5. STRAND STREET STA 10+41.93, 11.56' RT
   CONSTRUCT PERPENDICULAR CURB RAMP PER ODOT STD DRAWING RD916, SHEET 2B-1. THROAT OPENING WIDTH=8 FEET. SEE SHEET 25-15 FOR GRADING DETAILS.
6. CONSTRUCT LANDSCAPE ISLAND. SEE LANDSCAPE PLANS FOR PLANTING DETAILS.
7. CONSTRUCT TYPE "A" CURB PER CITY OF ST. HELENS STD DETAIL 210, SHEET 2B-1.
8. INSTALL TREE WELL.SEE LANDSCAPE PLANS FOR DETAILS.
9. INSTALL PUD UV SWITCH VAULT. REFER TO PUD PLANS FOR FURTHER INFORMATION.

STORM CONSTRUCTION KEY NOTES

1. CONSTRUCT MANHOLE PER CITY OF ST. HELENS STD DETAIL 350, SHEET 2B-3. SEE PROFILE FOR SIZE, RIM, AND INVERT INFORMATION.
2. CONSTRUCT CATCH BASIN PER CITY OF ST. HELENS STD DETAIL 315, SHEET 2B-3. SEE TABLE FOR INFORMATION.
3. ABANDON EXISTING STORM LINE.

CATCH BASIN DATA

NO.	STR STA./ OFFSET	TOC ELEV	IE OUT	LENGTH/ SIZE	SLOPE
SDCB 3G-L	STRAND ST 12+23.06 31.00' L	26.6	22.68	33 LF 10" PVC 3034	0.020
SDCB 3G-R	STRAND ST 12+23.06 29.00' R	26.7	22.56	27 LF 10" PVC 3034	0.020
SDCB 3H-L	STRAND ST 11+26.12 31.00' L	27.4	23.00	33 LF 10" PVC 3034	0.020
SDCB 3H-R	STRAND ST 11+26.12 29.00' R	27.4	22.88	27 LF 10" PVC 3034	0.020

City of St. Helens FOUNDED 1850

REGISTERED PROFESSIONAL ENGINEER 72,629 OREGON JUNE 11, 2008 KEITH BUISMAN
PRELIMINARY
EXPIRES: 12/31/2023

Otak

Otak, Inc.
808 SW Third Avenue, Ste. 800
Portland, OR 97204
503. 287. 6825
www.otak.com

S. 1ST AND STRAND STREETS ROAD AND UTILITY EXTENSIONS

ST. HELENS, OREGON
STREET AND STORM DRAIN PLAN AND PROFILE

STRAND STREET STA 9+50 TO 13+00

TITLE

#	DATE	DESCRIPTION

REVISIONS

NAVD88
DATUM

OTAK CAD — KJB
DRAWN BY — CHECKED BY

90% PLANS
STATUS

JANUARY 10, 2022
DATE

19823
PROJECT NUMBER

3G

© 2021 OTAK, INC.

If this drawing is not 22" x 34", it has been reduced/enlarged. Scale accordingly.

Plotted: Jan 10, 2022 - 10:09pm keith.buisman L:\Project\19800\19823\CADD\ACAD\Dwg\C19823C3.dwg Layout Name: 3G

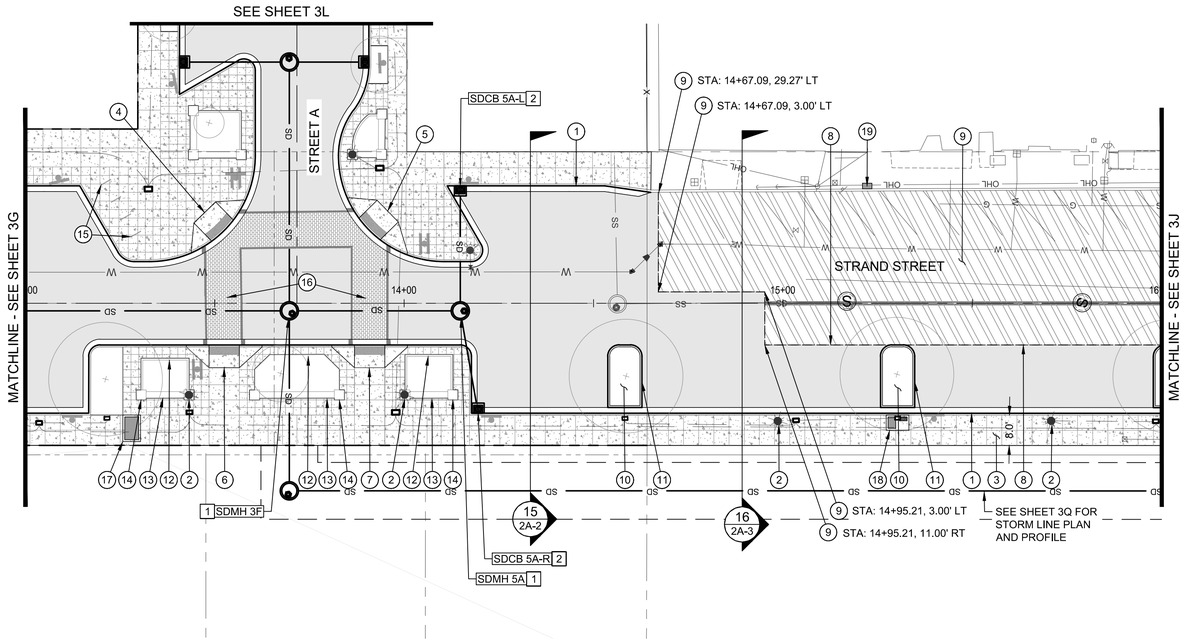

STRAND STREET STA 13+00 TO 16+00

0 20 40
SCALE IN FEET

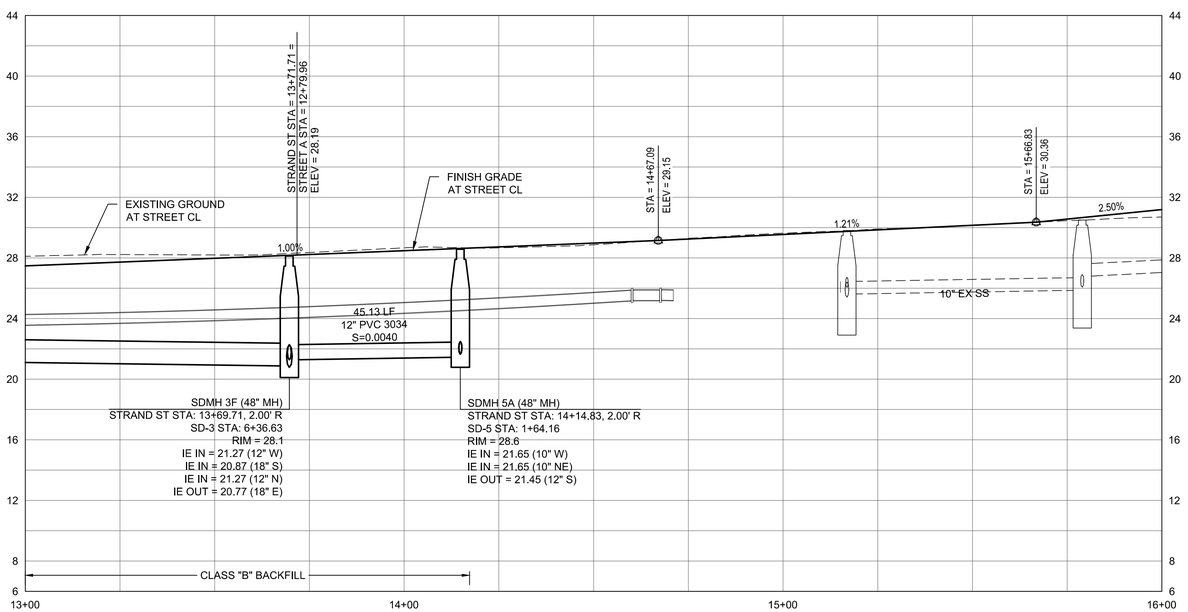

STRAND STREET STA 13+00 TO 16+00

HORZ 0 20 40
VERT 0 5 10
SCALE IN FEET

STREET CONSTRUCTION KEY NOTES

1. CONSTRUCT STANDARD MONOLITHIC CURB AND GUTTER PER CITY OF ST. HELENS STD DETAIL 200, SHEET 2B-1.
2. CONSTRUCT STREET LIGHT. SEE LIGHTING PLANS FOR DETAILS.
3. CONSTRUCT SIDEWALK PER CITY OF ST. HELENS STD DETAIL 220, SHEET 2B-1. WIDTH PER PLAN DIMENSION.
4. STRAND STREET STA 13+52.27, 18.97' LT
   CONSTRUCT PERPENDICULAR CURB RAMP PER ODOT STD DRAWING RD916, SHEET 2B-1. THROAT OPENING WIDTH=8 FEET. SEE SHEET 2F-11 FOR GRADING DETAILS.
5. STRAND STREET STA 13+90.67, 19.44' LT
   CONSTRUCT PERPENDICULAR CURB RAMP PER ODOT STD DRAWING RD916, SHEET 2B-1. THROAT OPENING WIDTH=8 FEET. SEE SHEET 2F-12 FOR GRADING DETAILS.
6. STRAND STREET STA 13+52.51, 11.00' RT
   CONSTRUCT PERPENDICULAR CURB RAMP PER ODOT STD DRAWING RD916, SHEET 2B-1. THROAT OPENING WIDTH=8 FEET. SEE SHEET 2H-7 FOR GRADING DETAILS.
7. STRAND STREET STA 13+90.91, 11.00' RT
   CONSTRUCT PERPENDICULAR CURB RAMP PER ODOT STD DRAWING RD916, SHEET 2B-1. THROAT OPENING WIDTH=8 FEET. SEE SHEET 2H-7 FOR GRADING DETAILS.
8. SAWCUT EXISTING PAVEMENT.
9. GRIND AND INLAY EXISTING PAVEMENT (2" THICK).
10. CONSTRUCT LANDSCAPE ISLAND. SEE LANDSCAPE PLANS FOR PLANTING DETAILS.
11. CONSTRUCT TYPE "A" CURB PER CITY OF ST. HELENS STD DETAIL 210, SHEET 2B-1.
12. CONSTRUCT CONCRETE CURB PLANTER. SEE LANDSCAPE PLANS FOR DETAILS.
13. CONSTRUCT STONE VENEER SEAT WALL.SEE LANDSCAPE PLANS FOR DETAILS.
14. CONSTRUCT STONE VENEER COLUMN.SEE LANDSCAPE PLANS FOR DETAILS.
15. INSTALL BIKE RACK. SEE LANDSCAPE PLANS FOR DETAILS.
16. INSTALL ENNIS-FLINT TRAFFICPATTERNSXD IN BRICK RED WITH STANDARD OFFSET BRICK PATTERN, OR APPROVED EQUAL. PROVIDE SUBMITTAL TO CITY FOR APPROVAL.
17. INSTALL PUD UV SWITCH VAULT. REFER TO PUD PLANS FOR FURTHER INFORMATION.
18. INSTALL PUD UT 1-PH BANK VAULT. REFER TO PUD PLANS FOR FURTHER INFORMATION.
19. INSTALL PUD METER. REFER TO PUD PLANS FOR FURTHER INFORMATION.

STORM CONSTRUCTION KEY NOTES

1. CONSTRUCT MANHOLE PER CITY OF ST. HELENS STD DETAIL 350, SHEET 2B-3. SEE PROFILE FOR SIZE, RIM, AND INVERT INFORMATION.
2. CONSTRUCT CATCH BASIN PER CITY OF ST. HELENS STD DETAIL 315, SHEET 2B-3. SEE TABLE FOR INFORMATION.

CATCH BASIN DATA					
NO.	STR STA./ OFFSET	TOC ELEV	IE OUT	LENGTH/ SIZE	SLOPE
SDCB 5A-L	STRAND ST 14+14.83 31.00' L	28.3	22.31	33 LF 10" PVC 3034	0.020
SDCB 5A-R	STRAND ST 14+19.55 29.00' R	28.4	22.20	27 LF 10" PVC 3034	0.020

City of St. Helens FOUNDED 1850

REGISTERED PROFESSIONAL ENGINEER 72,629 OREGON JUNE 11, 2008 KEITH BUISMAN
PRELIMINARY
EXPIRES: 12/31/2023

Otak
Otak, Inc.
808 SW Third Avenue, Ste. 800
Portland, OR 97204
503. 287. 6825
www.otak.com

S. 1ST AND STRAND STREETS ROAD AND UTILITY EXTENSIONS

ST. HELENS, OREGON
STREET AND STORM DRAIN PLAN AND PROFILE

STRAND STREET STA 13+00 TO 16+00

TITLE

.	DATE	DESCRIPTION

REVISIONS

NAVD88
DATUM

OTAK CAD — KJB
DRAWN BY — CHECKED BY

90% PLANS
STATUS

JANUARY 10, 2022
DATE

19823
PROJECT NUMBER

3H

© 2021 OTAK, INC.

If this drawing is not 22" x 34", it has been reduced/enlarged. Scale accordingly.

Plotted: Jan 10, 2022 - 10:09am keith.buisman L:\Project\19800\19823\CADD\ACAD\Dwg\C19823C3.dwg Layout Name: 3H

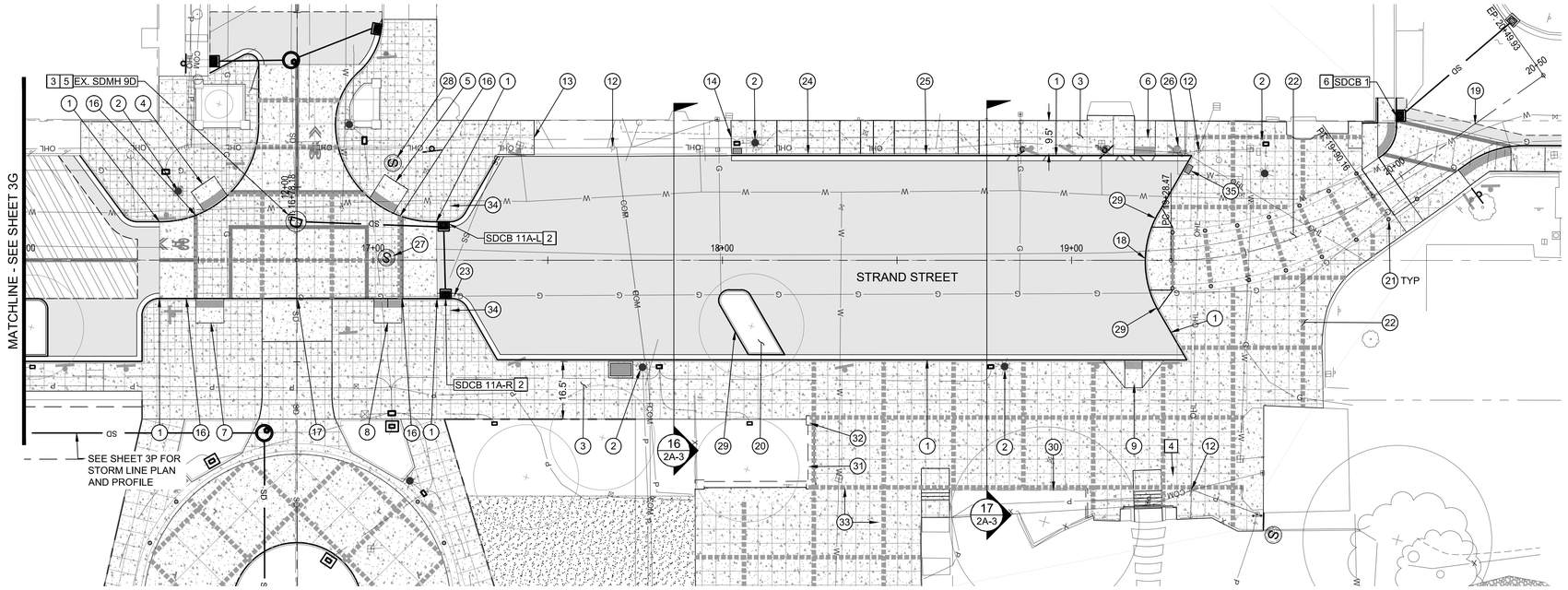

STRAND STREET STA 16+00 TO 20+25

0 20 40
SCALE IN FEET

CATCH BASIN DATA					
NO.	STR STA./ OFFSET	TOC ELEV	IE OUT	LENGTH/ SIZE	SLOPE
SDCB 1	STRAND ST 20+08.85 14.93' L	42.4	40.00	40 LF 10" PVC 3034	0.020
SDCB 11A-L	STRAND ST 17+20.17 11.00' L	33.6	IN=26.06 OUT=25.86	41 LF 10" PVC 3034	0.020
SDCB 11A-R	STRAND ST 17+20.75 11.00' R	32.8	26.47	20 LF 10" PVC 3034	0.020

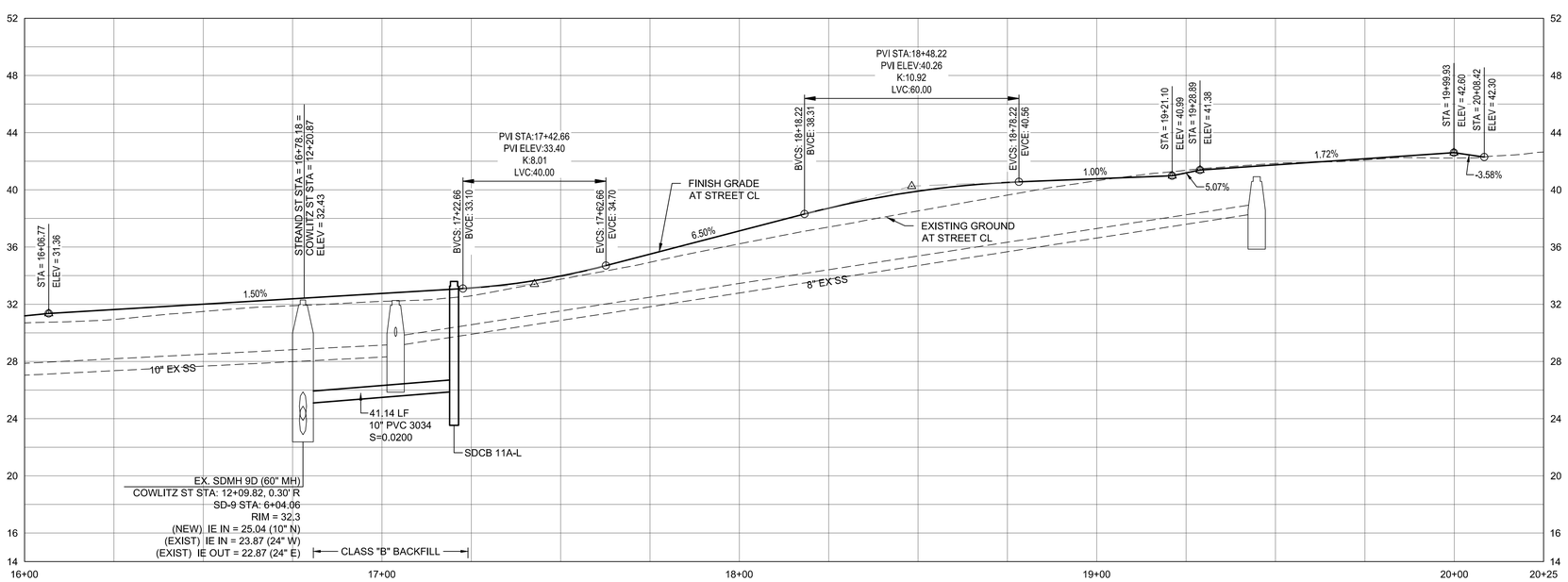

STRAND STREET STA 16+00 TO 20+25

HORZ 0 20 40
VERT 0 5 10
SCALE IN FEET

STREET CONSTRUCTION KEY NOTES

1. CONSTRUCT STANDARD MONOLITHIC CURB AND GUTTER PER CITY OF ST. HELENS STD DETAIL 200, SHEET 2B-1.
2. CONSTRUCT STREET LIGHT. SEE LIGHTING PLANS FOR DETAILS.
3. CONSTRUCT SIDEWALK PER CITY OF ST. HELENS STD DETAIL 220, SHEET 2B-1. WIDTH PER PLAN DIMENSION.
4. STRAND STREET STA 16+55.09, 15.96' LT
   CONSTRUCT PERPENDICULAR CURB RAMP PER ODOT STD DRAWING RD916, SHEET 2B-1. THROAT OPENING WIDTH=8 FEET. SEE SHEET 2F-5 FOR GRADING DETAILS.
5. STRAND STREET STA 17+02.18, 15.36' LT
   CONSTRUCT PERPENDICULAR CURB RAMP PER ODOT STD DRAWING RD916, SHEET 2B-1. THROAT OPENING WIDTH=8 FEET. SEE SHEET 2F-6 FOR GRADING DETAILS.
6. STRAND STREET STA 19+21.37, 29.92' LT
   CONSTRUCT PERPENDICULAR CURB RAMP PER ODOT STD DRAWING RD910, SHEET 2B-1. THROAT OPENING WIDTH=5 FEET. SEE SHEET 2H-9 FOR GRADING DETAILS.
7. STRAND STREET STA 16+53.18, 11.00' RT
   CONSTRUCT PERPENDICULAR CURB RAMP PER ODOT STD DRAWING RD910, SHEET 2B-1. THROAT OPENING WIDTH=8 FEET. SEE SHEET 2H-8 FOR GRADING DETAILS.
8. STRAND STREET STA 17+04.19, 11.00' RT
   CONSTRUCT PERPENDICULAR CURB RAMP PER ODOT STD DRAWING RD910, SHEET 2B-1. THROAT OPENING WIDTH=8 FEET. SEE SHEET 2H-8 FOR GRADING DETAILS.
9. STRAND STREET STA 19+17.39, 28.50' RT
   CONSTRUCT PERPENDICULAR CURB RAMP PER ODOT STD DRAWING RD910, SHEET 2B-1. THROAT OPENING WIDTH=5 FEET. SEE SHEET 2H-9 FOR GRADING DETAILS.
10. SAWCUT EXISTING PAVEMENT.
11. GRIND AND INLAY EXISTING PAVEMENT (2" THICK).
12. POWER POLE TO BE REMOVED WITH UNDERGROUNDING.
13. STRAND STREET STA 17+46.07
    MATCH EXISTING SIDEWALK.
14. STRAND STREET STA 18+02.57
    MATCH EXISTING SIDEWALK.
15. REMOVE EXISTING CURB LINE.
16. CONSTRUCT STANDARD MONOLITHIC CURB AND GUTTER PER CITY OF ST. HELENS STD DETAIL 200, SHEET 2. (CURB EXPOSURE = 0")
17. STRAND STREET STA 16+78.19, 11.00' RT
    CONSTRUCT DRIVEWAY APPROACH PER ODOT STD DRAWING RD740 OPTION H, SHEET 2B-1. THROAT OPENING WIDTH = 20 FEET. SEE SHEET 2H-8 FOR GRADING DETAILS.
18. STRAND STREET STA 19+21.11, 0.48' LT
    CONSTRUCT DRIVEWAY APPROACH PER ODOT STD DRAWING RD740 OPTION H, SHEET 2B-1. THROAT OPENING WIDTH = 18 FEET. SEE SHEET 2H-9 FOR GRADING DETAILS.
19. STRAND STREET STA 20+25.96
    CONSTRUCT DRIVEWAY APPROACH PER ODOT STD DRAWING RD740 OPTION H, SHEET 2B-1. THROAT OPENING WIDTH = 17 FEET. SEE SHEET 2H-9 FOR GRADING DETAILS.
20. CONSTRUCT LANDSCAPE ISLAND. SEE LANDSCAPE PLANS FOR PLANTING DETAILS.
21. INSTALL BOLLARDS. SEE LANDSCAPE PLANS FOR DETAILS.
22. CONSTRUCT CONTINUOUSLY REINFORCED P.C. CONCRETE PAVEMENT. SEE REINFORCING PLAN SHEET 2K-1.
23. RELOCATE GAS LINE AROUND PROPOSED CATCH BASIN.
24. STRAND STREET STA 18+24.54, 30.50' LT
    CONSTRUCT DRIVEWAY APPROACH PER ODOT STD DRAWING RD750 OPTION N, SHEET 2B-1. THROAT OPENING WIDTH = 17 FEET. SEE SHEET 2H-9 FOR GRADING DETAILS.
25. STRAND STREET STA 18+58.32, 30.50' LT
    CONSTRUCT DRIVEWAY APPROACH PER ODOT STD DRAWING RD750 OPTION N, SHEET 2B-1. THROAT OPENING WIDTH = 18 FEET. SEE SHEET 2H-9 FOR GRADING DETAILS.
26. RELOCATE EXISTING HYDRANT.
27. ADJUST EXISTING MANHOLE RIM TO PROPOSED GRADE.
28. ADJUST EXISTING MANHOLE RIM TO PROPOSED GRADE. MAJOR ADJUSTMENT TO MANHOLE, ROTATE CONE.
29. CONSTRUCT TYPE "A" CURB PER CITY OF ST. HELENS STD DETAIL 210, SHEET 2B-1.
30. CONSTRUCT CONCRETE CURB PLANTER. SEE LANDSCAPE PLANS FOR DETAILS.
31. CONSTRUCT STONE VENEER SEAT WALL.SEE LANDSCAPE PLANS FOR DETAILS.
32. CONSTRUCT STONE VENEER COLUMN.SEE LANDSCAPE PLANS FOR DETAILS.
33. CONSTRUCT UNIT PAVERS BAND. SEE LANDSCAPE PLANS FOR DETAILS.
34. CONSTRUCT TRAFFIC BARRIER ARM. SEE LANDSCAPE PLANS FOR DETAILS.
35. INSTALL PUD METER. REFER TO PUD PLANS FOR FURTHER INFORMATION.

STORM CONSTRUCTION KEY NOTES

1. CONSTRUCT MANHOLE PER CITY OF ST. HELENS STD DETAIL 350, SHEET 2B-3. SEE PROFILE FOR SIZE, RIM, AND INVERT INFORMATION.
2. CONSTRUCT CATCH BASIN PER CITY OF ST. HELENS STD DETAIL 315, SHEET 2B-3. SEE TABLE FOR INFORMATION.
3. CONNECT TO EXISTING STORM MANHOLE.
4. REMOVE EXISTING CATCH BASIN. PLUG LEAD.
5. ADJUST EXISTING MANHOLE RIM TO PROPOSED GRADE.
6. CONSTRUCT CATCH BASIN PER CITY OF ST. HELENS STD DETAIL 315, SHEET 2B-3. SEE TABLE FOR INFORMATION. CONTRACTOR TO FIELD VERIFY EXISTING IE AND CONNECTION POINT.

City of St. Helens FOUNDED 1850

REGISTERED PROFESSIONAL ENGINEER 72,629 OREGON JUNE 11, 2008 KEITH BUISMAN
PRELIMINARY
EXPIRES: 12/31/2023

Otak
Otak, Inc.
808 SW Third Avenue, Ste. 800
Portland, OR 97204
503. 287. 6825
www.otak.com

S. 1ST AND STRAND STREETS ROAD AND UTILITY EXTENSIONS

ST. HELENS, OREGON
STREET AND STORM DRAIN PLAN AND PROFILE

STRAND STREET STA 16+00 TO 20+25

TITLE

#	DATE	DESCRIPTION

REVISIONS

NAVD88
DATUM

OTAK CAD — KJB
DRAWN BY — CHECKED BY

90% PLANS
STATUS

JANUARY 10, 2022
DATE

19823
PROJECT NUMBER

3J

© 2021 OTAK, INC.

If this drawing is not 22" x 34", it has been reduced/enlarged. Scale accordingly.

Plotted: Jan 10, 2022 - 10:10am keith.buisman L:\Project\18800\19823\CAD\ACAD\Dwg\C19823C3.dwg Layout Name: 3J

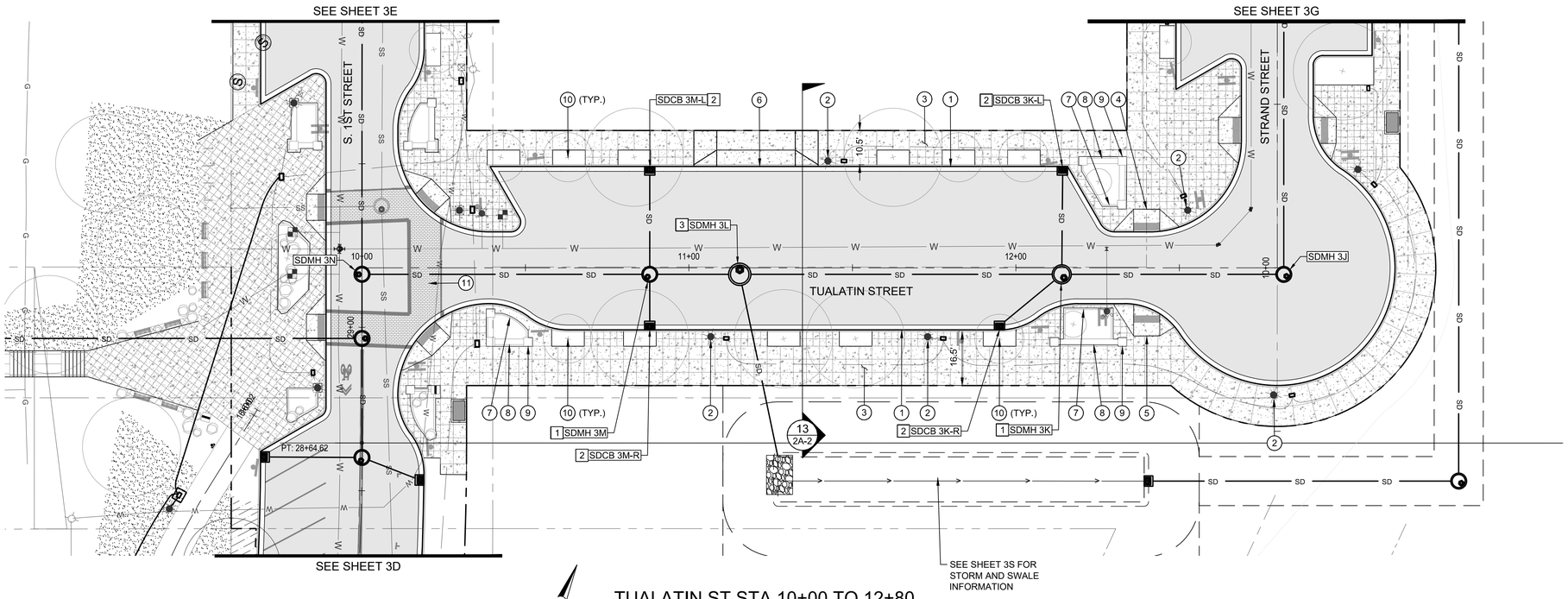

TUALATIN ST STA 10+00 TO 12+80

0 20 40
SCALE IN FEET

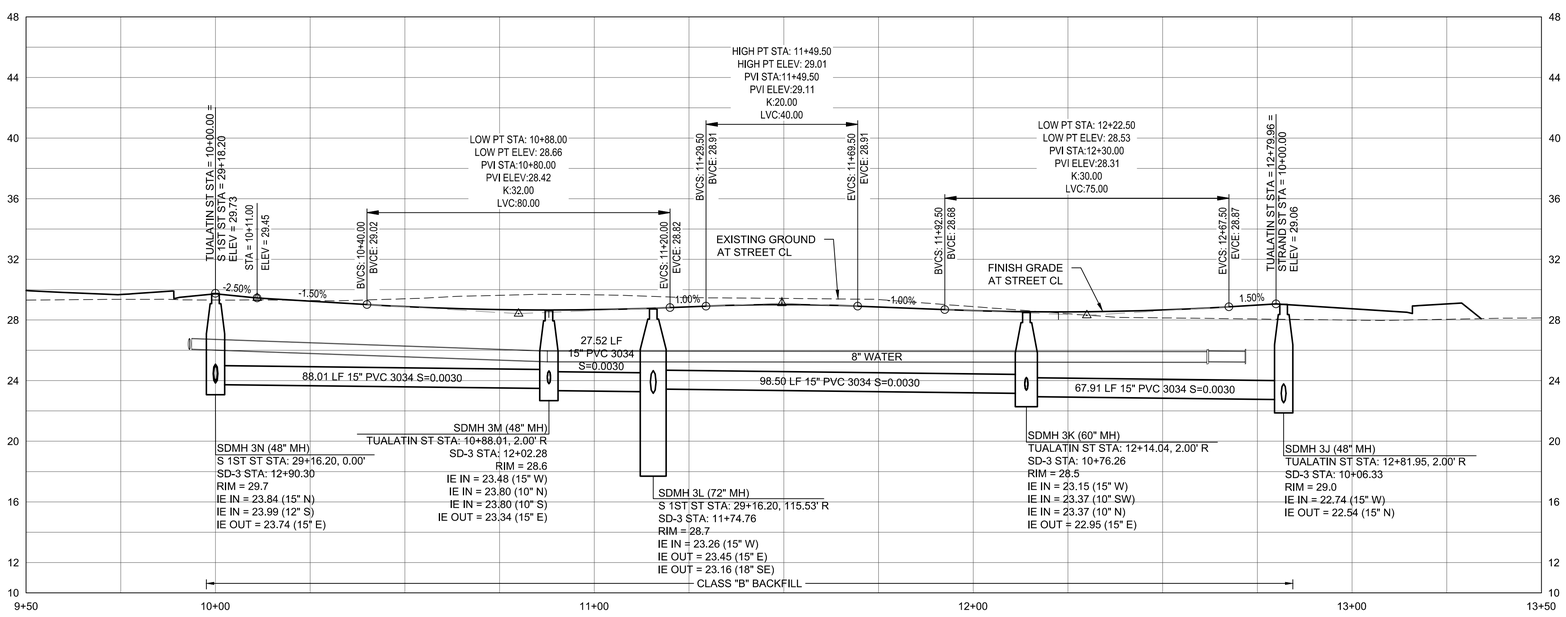

TUALATIN ST STA 10+00 TO 12+80

HORZ 0 20 40
VERT 0 5 10
SCALE IN FEET

STREET CONSTRUCTION KEY NOTES

1. CONSTRUCT STANDARD MONOLITHIC CURB AND GUTTER PER CITY OF ST. HELENS STD DETAIL 200, SHEET 2B-1.
2. CONSTRUCT STREET LIGHT. SEE LIGHTING PLANS FOR DETAILS.
3. CONSTRUCT SIDEWALK PER CITY OF ST. HELENS STD DETAIL 220, SHEET 2B-1. WIDTH PER PLAN DIMENSION.
4. TUALATIN STREET STA 12+39.99, 11.00' LT
   CONSTRUCT PERPENDICULAR CURB RAMP PER ODOT STD DRAWING RD916, SHEET 2B-1. THROAT OPENING WIDTH=8 FEET. SEE SHEET 2F-13 FOR GRADING DETAILS.
5. TUALATIN STREET STA 12+40.01, 12.15' RT
   CONSTRUCT PERPENDICULAR CURB RAMP PER ODOT STD DRAWING RD916, SHEET 2B-1. THROAT OPENING WIDTH=8 FEET. SEE SHEET 2F-14 FOR GRADING DETAILS.
6. TUALATIN STREET STA11+20.50, 31.00' LT
   CONSTRUCT DRIVEWAY APPROACH PER ODOT STD DRAWING RD74 OPTION H, SHEET 2B-1. THROAT OPENING WIDTH = 24 FEET. SEE SHEET 2H-9 FOR GRADING DETAILS.
7. CONSTRUCT CONCRETE CURB PLANTER. SEE LANDSCAPE PLANS FOR DETAILS.
8. CONSTRUCT STONE VENEER SEAT WALL.SEE LANDSCAPE PLANS FOR DETAILS.
9. CONSTRUCT STONE VENEER COLUMN.SEE LANDSCAPE PLANS FOR DETAILS.
10. INSTALL TREE WELL. SEE LANDSCAPE PLANS FOR DETAILS.
11. INSTALL ENNIS-FLINT TRAFFICPATTERNSXD IN BRICK RED WITH STANDARD OFFSET BRICK PATTERN, OR APPROVED EQUAL. PROVIDE SUBMITTAL TO CITY FOR APPROVAL.

STORM CONSTRUCTION KEY NOTES

1. CONSTRUCT MANHOLE PER CITY OF ST. HELENS STD DETAIL 350, SHEET 2B-3. SEE PROFILE FOR SIZE, RIM, AND INVERT INFORMATION.
2. CONSTRUCT CATCH BASIN PER CITY OF ST. HELENS STD DETAIL 315, SHEET 2B-3. SEE TABLE FOR INFORMATION.
3. CONSTRUCT FLOW SPLIT WATER QUALITY MANHOLE PER CITY OF ST. HELENS STD DETAIL 355, SHEET 2B-4. SEE PROFILE FOR SIZE, RIM, AND INVERT INFORMATION.

CATCH BASIN DATA

NO.	STR STA./ OFFSET	TOC ELEV	IE OUT	LENGTH/ SIZE	SLOPE
SDCB 3K-L	TUALATIN ST 12+14.23 31.00' L	28.2	23.99	31 LF 10" PVC 3034	0.020
SDCB 3K-R	TUALATIN ST 11+95.00 19.00' R	29.1	23.84	23 LF 10" PVC 3034	0.020
SDCB 3M-L	TUALATIN ST 10+88.01 31.00' L	28.3	24.46	33 LF 10" PVC 3034	0.020
SDCB 3M-R	TUALATIN ST 10+88.01 19.00' R	28.6	24.14	17 LF 10" PVC 3034	0.020

City of St. Helens FOUNDED 1850

REGISTERED PROFESSIONAL ENGINEER 72,629 OREGON JUNE 11, 2009 KEITH BUISMAN
PRELIMINARY
EXPIRES: 12/31/2023

Otak
Otak, Inc.
808 SW Third Avenue, Ste. 800
Portland, OR 97204
503. 287. 6825
www.otak.com

S. 1ST AND STRAND STREETS ROAD AND UTILITY EXTENSIONS

ST. HELENS, OREGON
STREET AND STORM DRAIN PLAN AND PROFILE

TUALATIN ST STA 10+00 TO 12+80

TITLE

#	DATE	DESCRIPTION

REVISIONS

NAVD88
DATUM

OTAK CAD — DRAWN BY
KJB — CHECKED BY

90% PLANS
STATUS

JANUARY 10, 2022
DATE

19823
PROJECT NUMBER

3K

© 2021 OTAK, INC.

If this drawing is not 22" x 34", it has been reduced/enlarged. Scale accordingly.

Plotted: Jan 10, 2022 - 10:10pm, keith.buisman L:\Projects\19800\19823\CADD\ACAD\Dwgs\C19823C3.dwg Layout Name: 3K

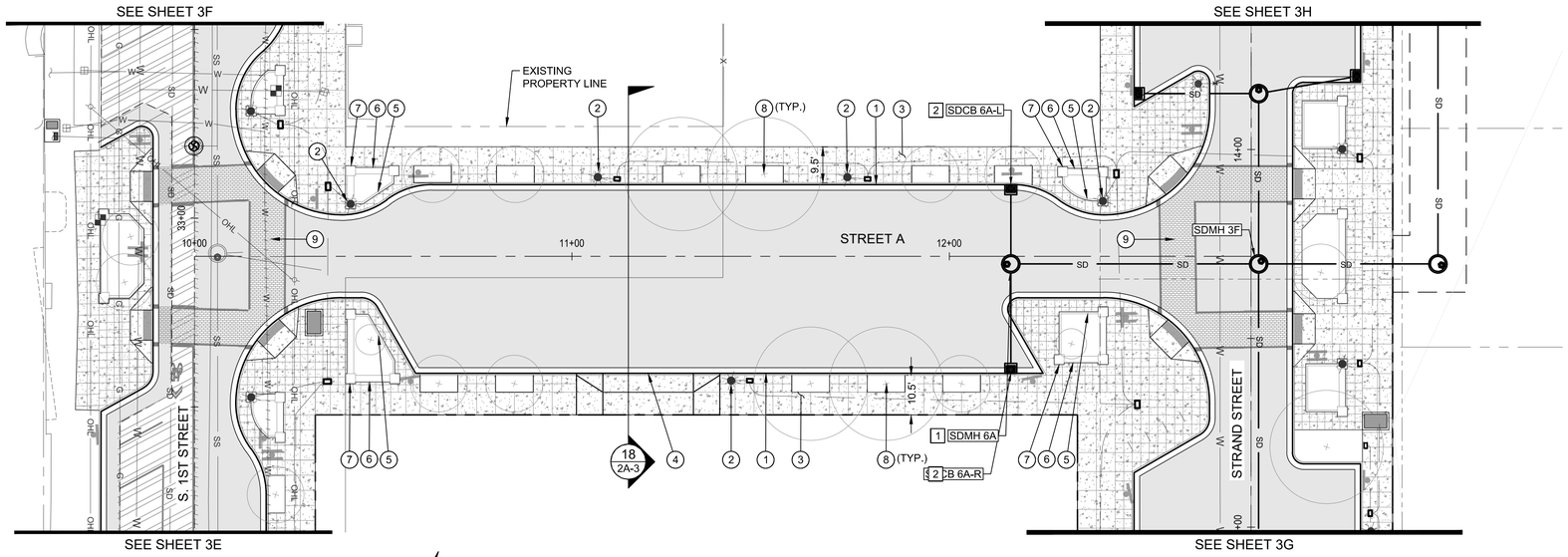

STREET A STA 10+00 TO 12+80

SCALE IN FEET

STREET CONSTRUCTION KEY NOTES

1. CONSTRUCT STANDARD MONOLITHIC CURB AND GUTTER PER CITY OF ST. HELENS STD DETAIL 200, SHEET 2B-1.
2. CONSTRUCT STREET LIGHT. SEE LIGHTING PLANS FOR DETAILS.
3. CONSTRUCT SIDEWALK PER CITY OF ST. HELENS STD DETAIL 220, SHEET 2B-1. WIDTH PER PLAN DIMENSION.
4. STREET A STA 11+25.19,58.41' RT
   CONSTRUCT DRIVEWAY APPROACH PER ODOT STD DRAWING RD740 OPTION H, SHEET 2B-1. THROAT OPENING WIDTH = 24 FEET. SEE SHEET 2H-10 FOR GRADING DETAILS.
5. CONSTRUCT CONCRETE CURB PLANTER. SEE LANDSCAPE PLANS FOR DETAILS.
6. CONSTRUCT STONE VENEER SEAT WALL.SEE LANDSCAPE PLANS FOR DETAILS.
7. CONSTRUCT STONE VENEER COLUMN.SEE LANDSCAPE PLANS FOR DETAILS.
8. INSTALL TREE WELL. SEE LANDSCAPE PLANS FOR DETAILS.
9. INSTALL ENNIS-FLINT TRAFFICPATTERNSXD IN BRICK RED WITH STANDARD OFFSET BRICK PATTERN, OR APPROVED EQUAL. PROVIDE SUBMITTAL TO CITY FOR APPROVAL.

STORM CONSTRUCTION KEY NOTES

1. CONSTRUCT MANHOLE PER CITY OF ST. HELENS STD DETAIL 350, SHEET 2B-3. SEE PROFILE FOR SIZE, RIM, AND INVERT INFORMATION.
2. CONSTRUCT CATCH BASIN PER CITY OF ST. HELENS STD DETAIL 315, SHEET 2B-3. SEE TABLE FOR INFORMATION.

CATCH BASIN DATA

NO.	STR STA./ OFFSET	TOC ELEV	IE OUT	LENGTH/ SIZE	SLOPE
SDCB 6A-L	STREET A 12+16.30 19.00' L	27.2	22.15	21 LF 10" PVC 3034	0.020
SDCB 6A-R	STREET A 12+16.30 31.00' R	27.3	22.31	29 LF 10" PVC 3034	0.020

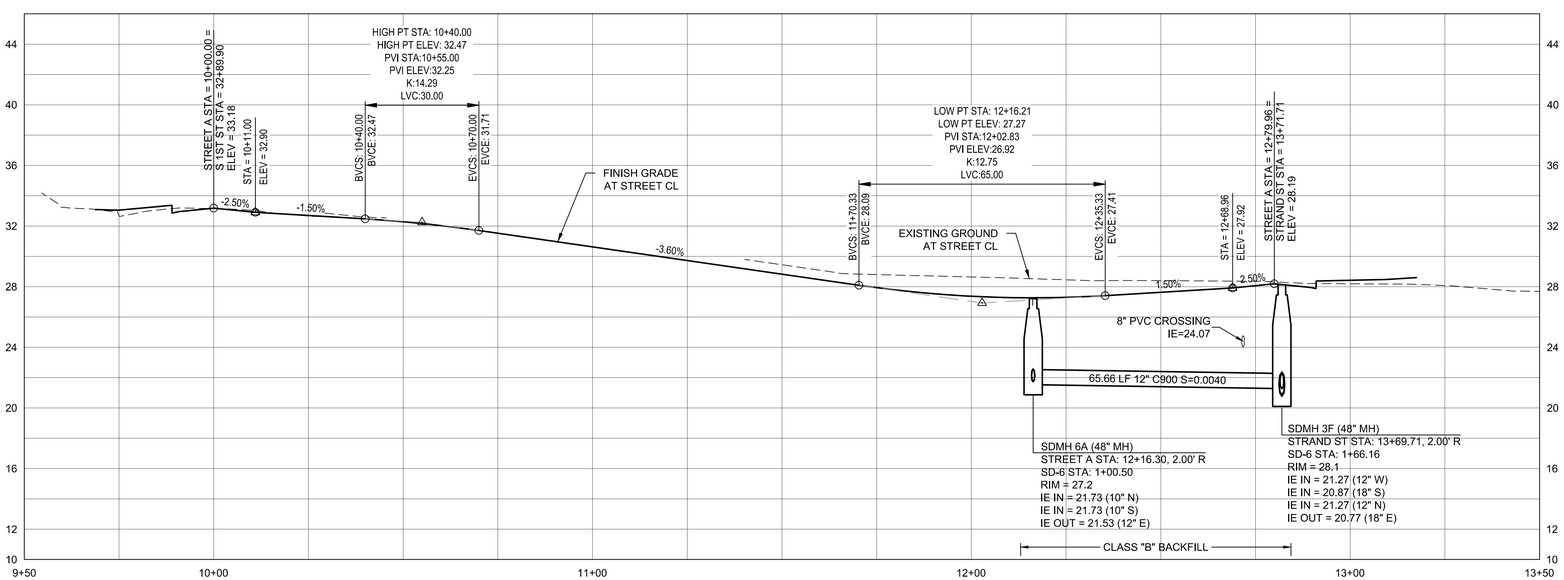

STREET A STA 10+00 TO 12+80

HORZ 0 20 40
VERT 0 5 10
SCALE IN FEET

City of St. Helens FOUNDED 1850

REGISTERED PROFESSIONAL ENGINEER 72,629 OREGON JUNE 11, 2008 KEITH BUISMAN
PRELIMINARY
EXPIRES: 12/31/2023

Otak
Otak, Inc.
808 SW Third Avenue, Ste. 800
Portland, OR 97204
503. 287. 6825
www.otak.com

S. 1ST AND STRAND STREETS ROAD AND UTILITY EXTENSIONS

ST. HELENS, OREGON
STREET AND STORM DRAIN PLAN AND PROFILE

STREET A STA 10+00 TO 12+80

TITLE

#	DATE	DESCRIPTION

REVISIONS

NAVD88
DATUM

OTAK CAD
DRAWN BY
KJB
CHECKED BY

90% PLANS
STATUS

JANUARY 10, 2022
DATE

19823
PROJECT NUMBER

3L

© 2021 OTAK, INC.

If this drawing is not 22" x 34", it has been reduced/enlarged. Scale accordingly.

Plotted: Jan 10, 2022 - 10:11am, keith.buisman L:\Project\19820\19823\CADD\ACAD\Dwg\C1982323.dwg Layout Name: 3L

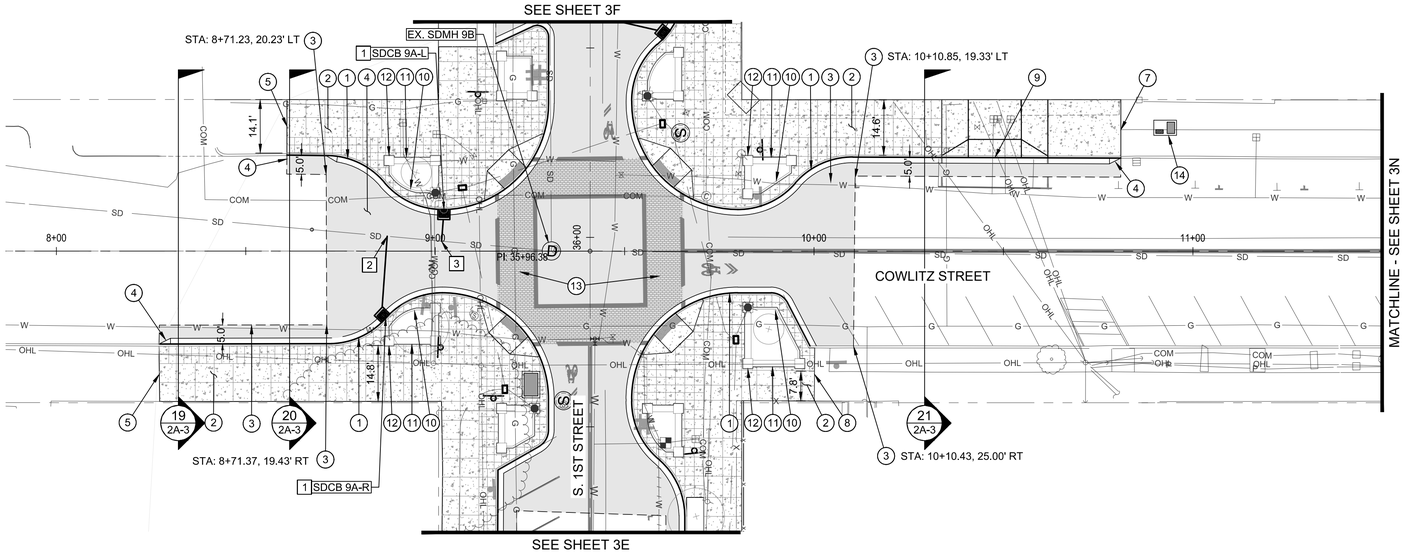

COWLITZ STREET STA 8+50 TO 11+50

SCALE IN FEET

STREET CONSTRUCTION KEY NOTES

1. CONSTRUCT STANDARD MONOLITHIC CURB AND GUTTER PER CITY OF ST. HELENS STD DETAIL 200, SHEET 2B-1.
2. CONSTRUCT SIDEWALK PER CITY OF ST. HELENS STD DETAIL 220, SHEET 2B-1. WIDTH PER PLAN DIMENSION.
3. SAWCUT EXISTING PAVEMENT.
4. TAPER CURB AND GUTTER TO MATCH EXISTING VERTICAL CURB.
5. COWLITZ STREET STA 8+60.86
   MATCH EXISTING SIDEWALK.
   BEGIN SIDEWALK IMPROVEMENTS.
6. COWLITZ STREET STA 8+27.12
   MATCH EXISTING SIDEWALK.
   BEGIN SIDEWALK IMPROVEMENTS.
7. COWLITZ STREET STA 10+80.98
   MATCH EXISTING SIDEWALK.
   END SIDEWALK IMPROVEMENTS.
8. COWLITZ STREET STA 10+00.20
   MATCH EXISTING SIDEWALK.
   END SIDEWALK IMPROVEMENTS.
9. COWLITZ STREET STA 10+47.73, 24.68' LT
   CONSTRUCT DRIVEWAY APPROACH PER ODOT STD DRAWING RD74OPTION H, SHEET 2B-1. THROAT OPENING WIDTH = 14 FEET.
   SEE SHEET 2H-9 FOR GRADING DETAILS.
10. CONSTRUCT CONCRETE CURB PLANTER. SEE LANDSCAPE PLANS FOR DETAILS.
11. CONSTRUCT STONE VENEER SEAT WALL.SEE LANDSCAPE PLANS FOR DETAILS.
12. CONSTRUCT STONE VENEER COLUMN.SEE LANDSCAPE PLANS FOR DETAILS.
13. INSTALL ENNIS-FLINT TRAFFICPATTERNSXD IN BRICK RED WITH STANDARD OFFSET BRICK PATTERN, OR APPROVED EQUAL. PROVIDE SUBMITTAL TO CITY FOR APPROVAL.
14. INSTALL PUD UT 1-PH BANK VAULT. REFER TO PUD PLANS FOR FURTHER INFORMATION.

STORM CONSTRUCTION KEY NOTES

1. CONSTRUCT CATCH BASIN PER CITY OF ST. HELENS STD DETAIL 315, SHEET 2B-3. SEE TABLE FOR INFORMATION.
2. COWLITZ STREET STA: 8+87.32, 3.92' LT
   CONSTRUCT STORM SEWER TEE INTO EXISTING 8-INCH STORM SEWER.
3. COWLITZ STREET STA: 9+01.67, 2.63' LT
   CONSTRUCT STORM SEWER TEE INTO EXISTING 8-INCH STORM SEWER.

CATCH BASIN DATA					
NO.	STR STA./ OFFSET	TOC ELEV	IE OUT	LENGTH/ SIZE	SLOPE
SDCB 9A-L	COWLITZ ST 9+02.32 11.00' L	36.5	34.31	8 LF 8" PVC	0.020
SDCB 9A-R	COWLITZ ST 8+86.96 17.72' R	37.3	34.63	20 LF 8" PVC	0.020

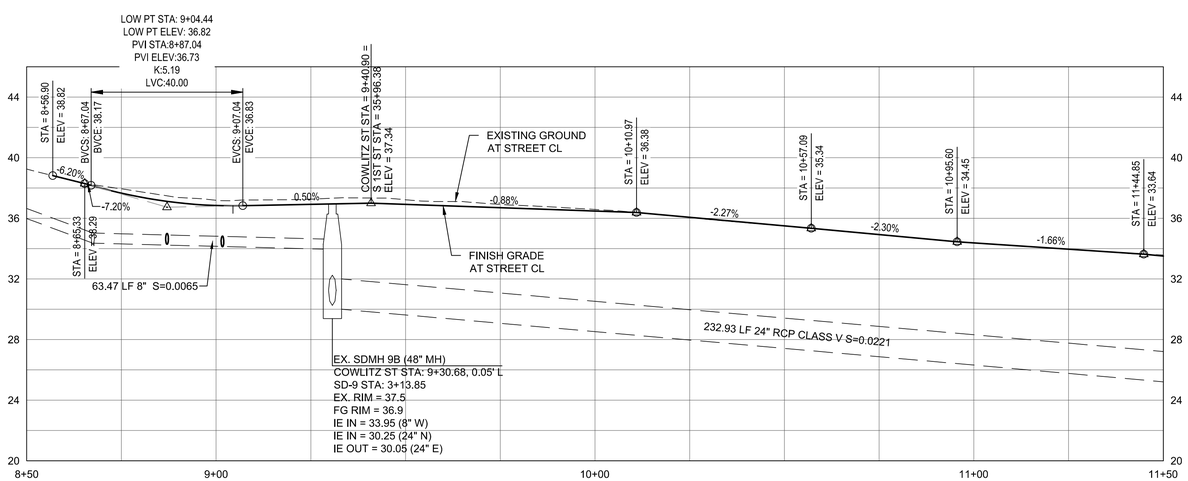

COWLITZ STREET STA 8+50 TO 11+50

HORZ 0 20 40
VERT 0 5 10
SCALE IN FEET

City of St. Helens FOUNDED 1850

REGISTERED PROFESSIONAL ENGINEER 72,629 OREGON JUNE 11, 2008 KEITH BUISMAN
PRELIMINARY
EXPIRES: 12/31/2023

Otak
Otak, Inc.
808 SW Third Avenue, Ste. 800
Portland, OR 97204
503. 287. 6825
www.otak.com

S. 1ST AND STRAND STREETS ROAD AND UTILITY EXTENSIONS

ST. HELENS, OREGON
STREET AND STORM DRAIN PLAN AND PROFILE

COWLITZ STREET STA 8+50 TO 11+50

TITLE

#	DATE	DESCRIPTION

REVISIONS

NAVD88
DATUM

OTAK CAD — KJB
DRAWN BY — CHECKED BY

90% PLANS
STATUS

JANUARY 10, 2022
DATE

19823
PROJECT NUMBER

3M

© 2021 OTAK, INC.

If this drawing is not 22" x 34", it has been reduced/enlarged. Scale accordingly.

Plotted: Jan 10, 2022 - 10:11am keith.buisman L:\Project\19800\19823\CADD\ACAD\Dwg\C19823C3.dwg Layout Name: 3M

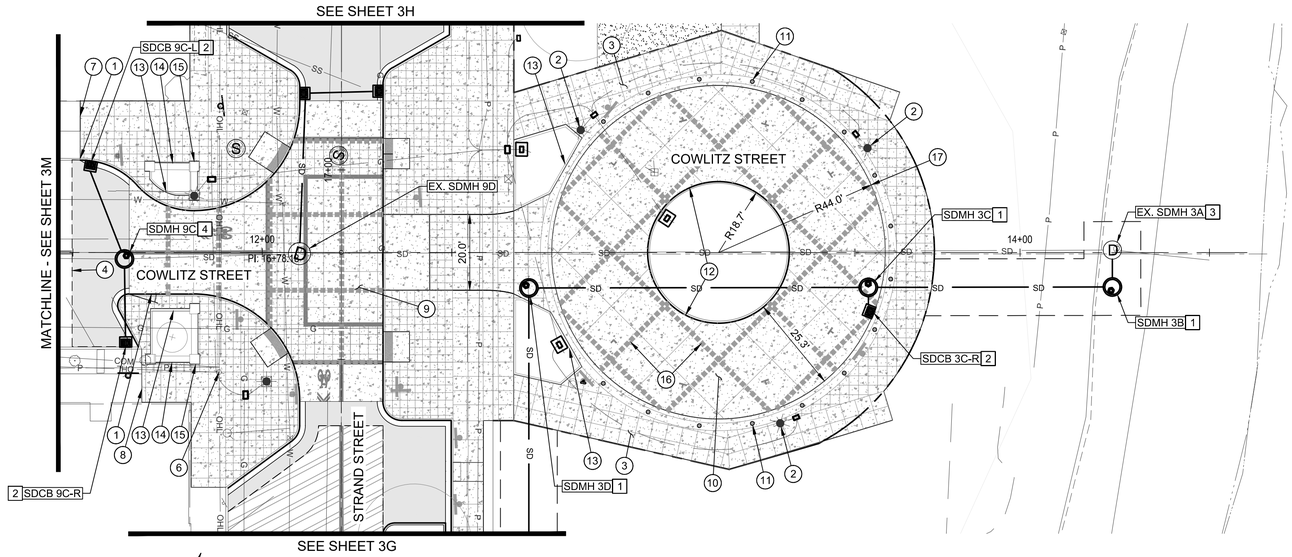

COWLITZ STREET STA 11+50 TO 15+00

0 20 40
SCALE IN FEET

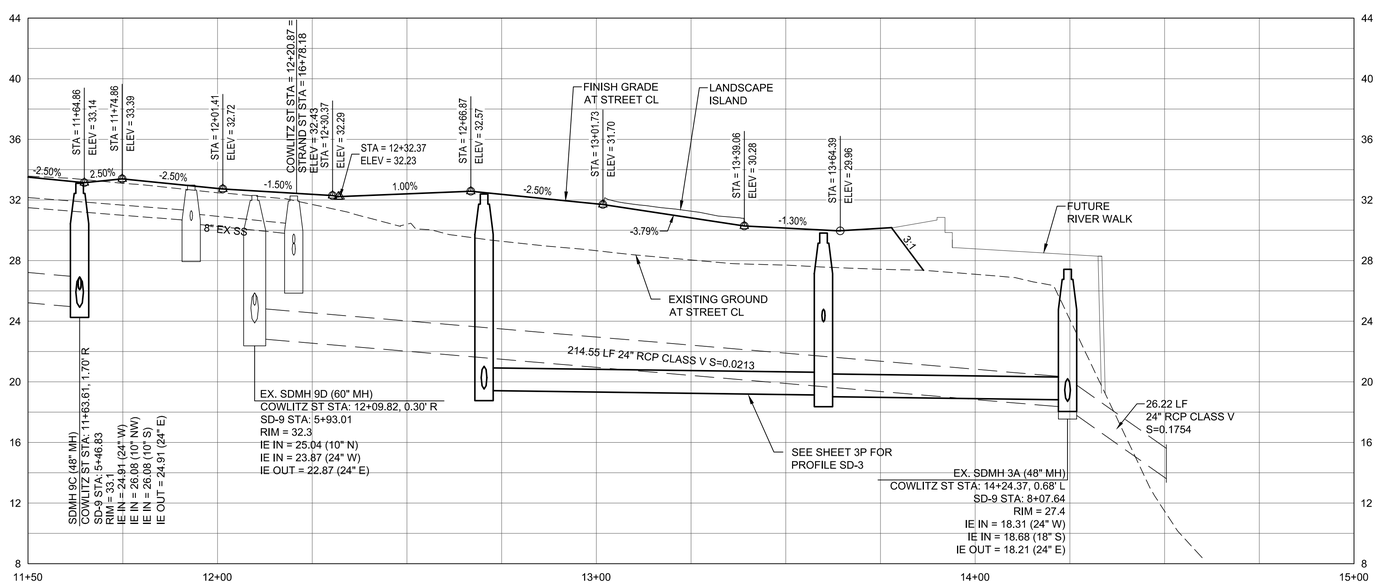

COWLITZ STREET STA 11+50 TO 15+00

HORZ 0 20 40
VERT 0 5 10
SCALE IN FEET

STREET CONSTRUCTION KEY NOTES

1. CONSTRUCT STANDARD MONOLITHIC CURB AND GUTTER PER CITY OF ST. HELENS STD DETAIL 200, SHEET 2B-1.
2. CONSTRUCT STREET LIGHT. SEE LIGHTING PLANS FOR DETAILS.
3. CONSTRUCT SIDEWALK PER CITY OF ST. HELENS STD DETAIL 220, SHEET 2B-1. WIDTH PER PLAN DIMENSION.
4. SAWCUT EXISTING PAVEMENT.
5. NOT USED.
6. POWER POLE TO BE REMOVED WITH UNDERGROUNDING.
7. COWLITZ STREET STA 11+51.93
   MATCH EXISTING SIDEWALK.
8. COWLITZ STREET STA 11+68.19
   MATCH EXISTING SIDEWALK.
9. CONSTRUCT RAISED INTERSECTION. CONSTRUCT CONTINUOUSLY REINFORCED P.C. CONCRETE PAVEMENT. SEE REINFORCING PLAN SHEET 2K-2.
10. CONSTRUCT CONCRETE TURNAROUND. CONSTRUCT CONTINUOUSLY REINFORCED P.C. CONCRETE PAVEMENT. SEE REINFORCING PLAN SHEET 2K-2.
11. INSTALL BOLLARDS. SEE LANDSCAPE PLANS FOR DETAILS.
12. CONSTRUCT STANDARD TYPE A CURB PER CITY OF ST. HELENS STD DETAIL 210, SHEET 2B-1.
13. CONSTRUCT CONCRETE CURB PLANTER. SEE LANDSCAPE PLANS FOR DETAILS.
14. CONSTRUCT STONE VENEER SEAT WALL. SEE LANDSCAPE PLANS FOR DETAILS.
15. CONSTRUCT STONE VENEER COLUMN. SEE LANDSCAPE PLANS FOR DETAILS.
16. CONSTRUCT UNIT PAVERS BAND. SEE LANDSCAPE PLANS FOR DETAILS.
17. CONSTRUCT STANDARD TYPE A CURB PER CITY OF ST. HELENS STD DETAIL 210, SHEET 2B-1. (CONSTRUCT WITH 0" EXPOSURE)

STORM CONSTRUCTION KEY NOTES

1. CONSTRUCT MANHOLE PER CITY OF ST. HELENS STD DETAIL 350, SHEET 2B-3. SEE PROFILE FOR SIZE, RIM, AND INVERT INFORMATION.
2. CONSTRUCT CATCH BASIN PER CITY OF ST. HELENS STD DETAIL 315, SHEET 2B-3. SEE TABLE FOR INFORMATION.
3. CONNECT TO EXISTING STORM MANHOLE.
4. CONSTRUCT MANHOLE OVER EXISTING STORM LINE PER CITY OF ST. HELENS STD DETAIL 350, SHEET 2B-3. SEE PROFILE FOR SIZE, RIM, AND INVERT INFORMATION.

CATCH BASIN DATA

NO.	STR STA./ OFFSET	TOC ELEV	IE OUT	LENGTH/ SIZE	SLOPE
SDCB 3C-R	COWLITZ ST 13+61.40 15.96' R	29.7	24.70	5 LF 10" PVC 3034	0.150
SDCB 9C-L	COWLITZ ST 11+54.92 24.11' L	34.1	26.59	26 LF 10" PVC 3034	0.020
SDCB 9C-R	COWLITZ ST 11+63.94 24.94' R	32.0	26.54	23 LF 10" PVC 3034	0.020

City of St. Helens FOUNDED 1850

REGISTERED PROFESSIONAL ENGINEER 72,629 OREGON JUNE 11, 2008 KEITH BUISMAN
PRELIMINARY
EXPIRES: 12/31/2023

Otak
Otak, Inc.
808 SW Third Avenue, Ste. 800
Portland, OR 97204
503. 287. 6825
www.otak.com

S. 1ST AND STRAND STREETS ROAD AND UTILITY EXTENSIONS

ST. HELENS, OREGON
STREET AND STORM DRAIN PLAN AND PROFILE

COWLITZ STREET STA 11+50 TO 15+00

TITLE

#	DATE	DESCRIPTION

REVISIONS

NAVD88
DATUM

OTAK CAD — KJB
DRAWN BY — CHECKED BY

90% PLANS
STATUS

JANUARY 10, 2022
DATE

19823
PROJECT NUMBER

3N

© 2021 OTAK, INC.

If this drawing is not 22" x 34", it has been reduced/enlarged. Scale accordingly.

Plottedt: Jan 10, 2022 - 10:12pm keith.buisman L:\Project\19800\19823\CADD\ACAD\Dwg\C19823C3.dwg Layout Name: 3N

STORM CONSTRUCTION KEY NOTES

1. CONSTRUCT MANHOLE PER CITY OF ST. HELENS STD 350, SHEET 2B-3. SEE PROFILE FOR SIZE, RIM, AND INVERT INFORMATION.
2. CONNECT TO EXISTING STORM MANHOLE.

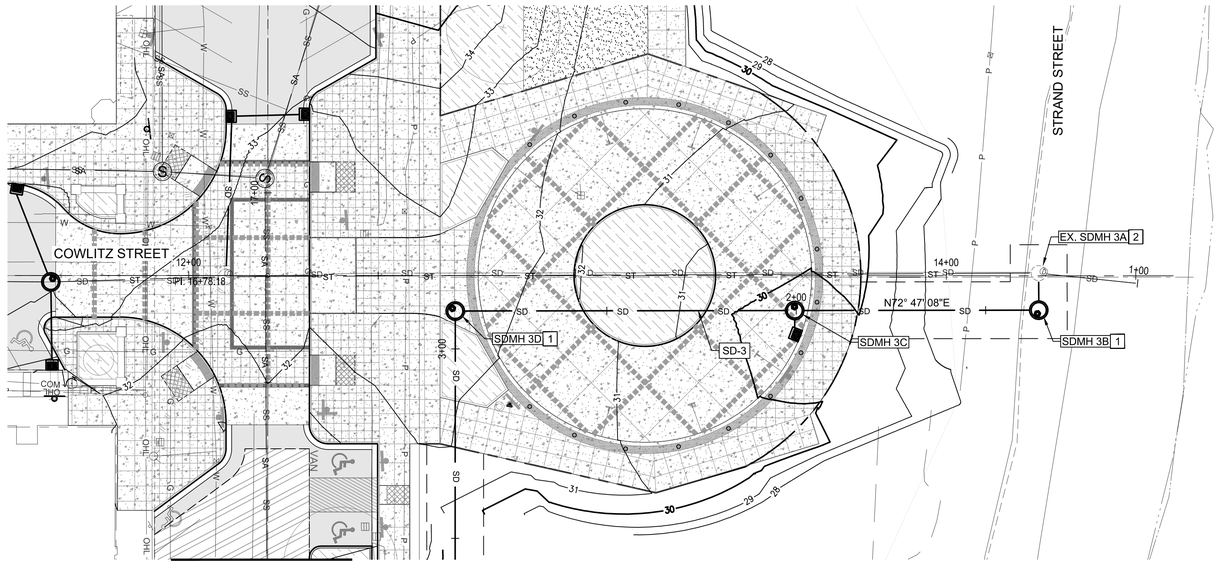

SD-3 STA 1+00 - 3+50

0 20 40
SCALE IN FEET

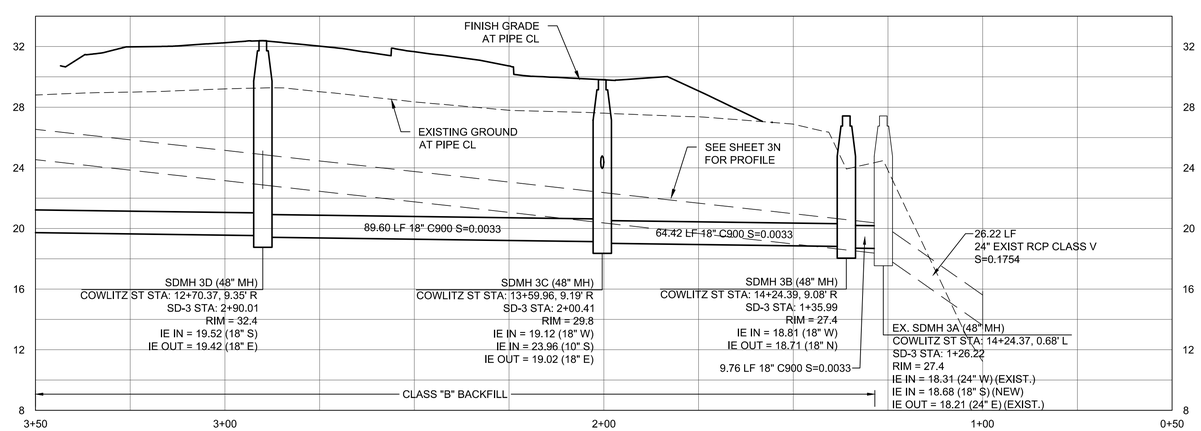

SD-3 STA 1+00 - 3+50

HORZ 0 20 40
VERT 0 5 10
SCALE IN FEET

City of St. Helens FOUNDED 1850

REGISTERED PROFESSIONAL ENGINEER 72,629 OREGON JUNE 11, 2008 KEITH BUISMAN
PRELIMINARY
EXPIRES: 12/31/2023

Otak

Otak, Inc.
808 SW Third Avenue, Ste. 800
Portland, OR 97204
503. 287. 6825
www.otak.com

S. 1ST AND STRAND STREETS ROAD AND UTILITY EXTENSIONS

ST. HELENS, OREGON
STREET AND STORM DRAIN PLAN AND PROFILE

SD-3 STA 1+00 TO 3+50

TITLE

#	DATE	DESCRIPTION

REVISIONS

NAVD88
DATUM

OTAK CAD
DRAWN BY | CHECKED BY: KJB

90% PLANS
STATUS

JANUARY 10, 2022
DATE

19823
PROJECT NUMBER

3P

© 2021 OTAK, INC.

If this drawing is not 22" x 34", it has been reduced/enlarged. Scale accordingly.

Plotted: Jan 10, 2022 - 10:25am, keith.buisman L:\Project\19800\19823\CADD\ACAD\Dwg\C19823C3P0.dwg Layout Name: 3P

STORM CONSTRUCTION KEY NOTES

1 CONSTRUCT MANHOLE PER CITY OF ST. HELENS STD 350, SHEET 2B-3. SEE PROFILE FOR SIZE, RIM, AND INVERT INFORMATION.

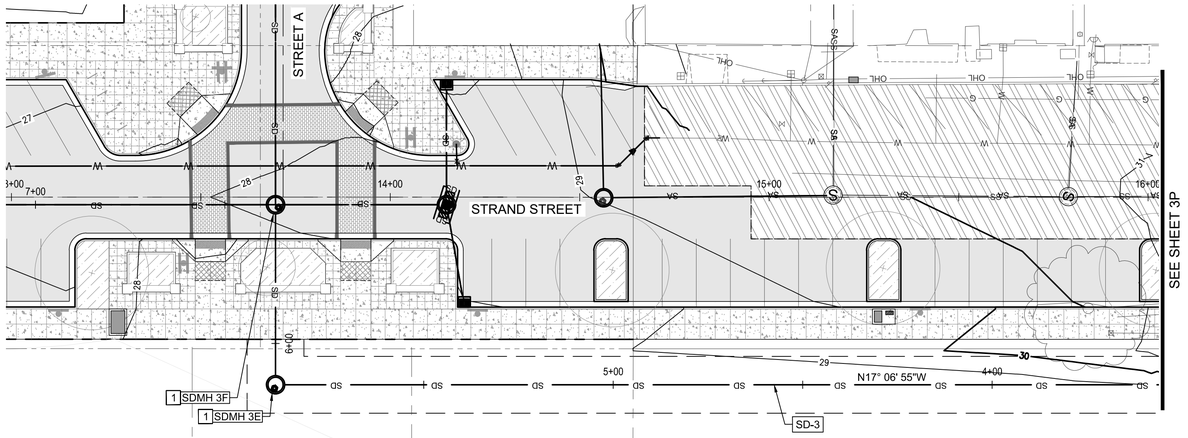

SD-3 STA 4+00 - 7+00

0 20 40
SCALE IN FEET

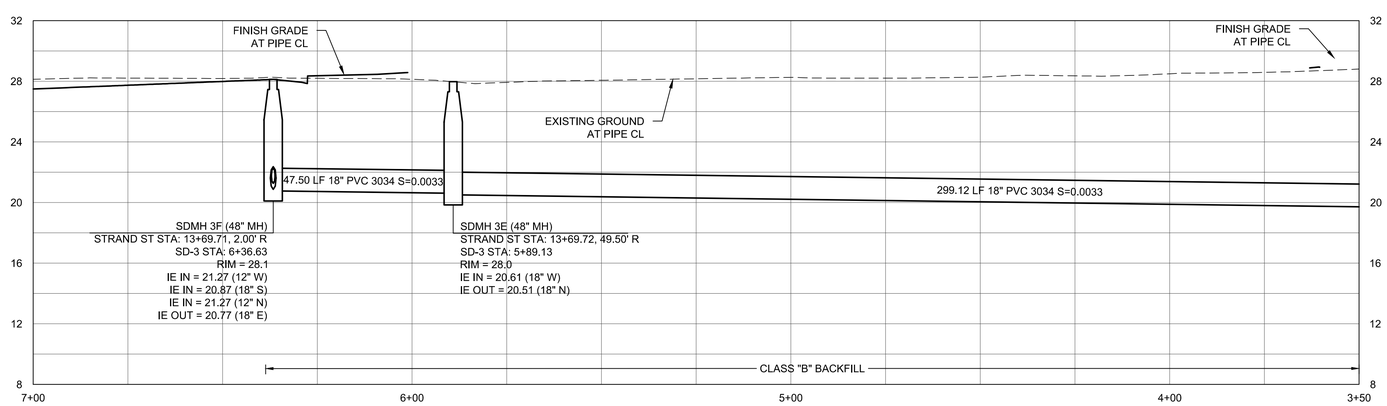

SD-3 STA 4+00 - 7+00

HORZ 0 20 40
VERT 0 5 10
SCALE IN FEET

City of St. Helens FOUNDED 1850

REGISTERED PROFESSIONAL ENGINEER 72,629 OREGON JUNE 11, 2008 KEITH BUISMAN
PRELIMINARY
EXPIRES: 12/31/2023

Otak

Otak, Inc.
808 SW Third Avenue, Ste. 800
Portland, OR 97204
503. 287. 6825
www.otak.com

S. 1ST AND STRAND STREETS ROAD AND UTILITY EXTENSIONS

ST. HELENS, OREGON
STREET AND STORM DRAIN PLAN AND PROFILE

SD-3 STA 3+50 TO 7+00

TITLE

#	DATE	DESCRIPTION

REVISIONS

NAVD88
DATUM

OTAK CAD — KJB
DRAWN BY — CHECKED BY

90% PLANS
STATUS

JANUARY 10, 2022
DATE

19823
PROJECT NUMBER

3Q

© 2021 OTAK, INC.

If this drawing is not 22" x 34", it has been reduced/enlarged. Scale accordingly.

Plotted: Jan 10, 2022 - 10:25am keith.buisman L:\Project\18800\19823\CADD\ACAD\Dwg\C19823-3P0.dwg Layout:Name: 3Q

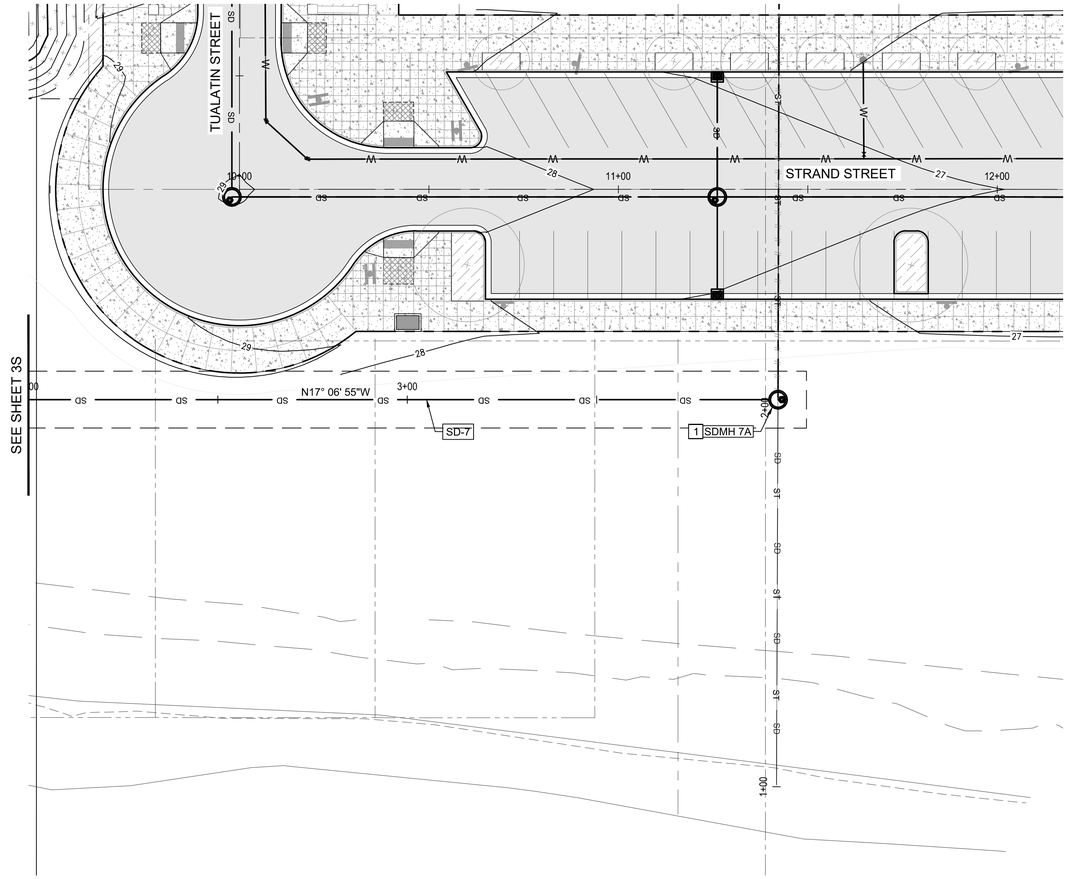

STORM CONSTRUCTION KEY NOTES

1. CONSTRUCT MANHOLE OVER EXISTING STORM LINE PER CITY OF ST. HELENS STD 350, SHEET 2B-3. SEE PROFILE FOR SIZE, RIM, AND INVERT INFORMATION.

SD-7 STA 0+50 - 4+00

SCALE IN FEET (0, 20, 40)

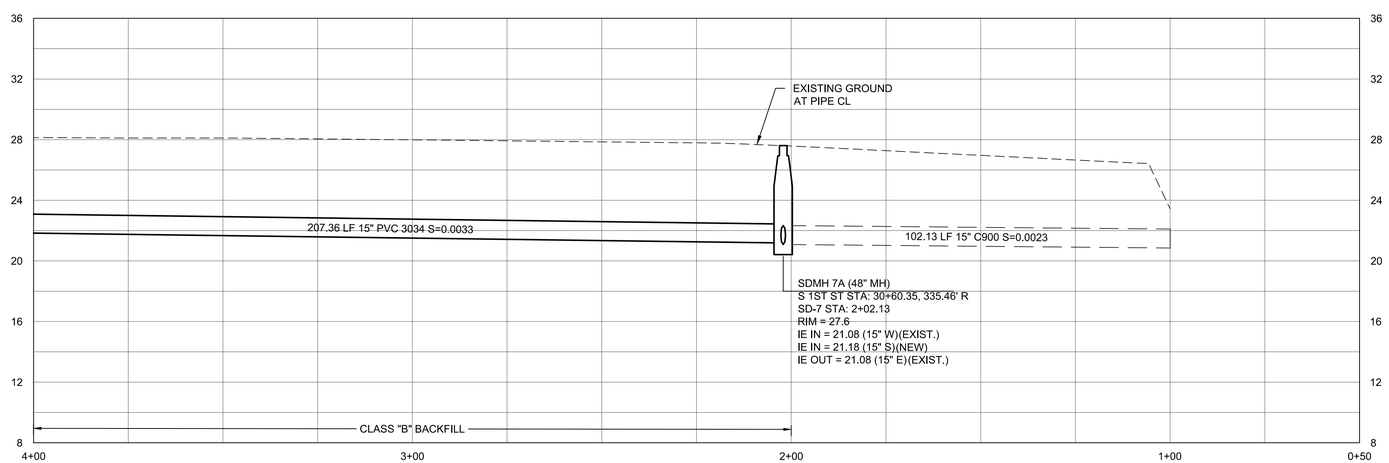

SD-7 STA 0+50 - 4+00

HORZ 0 20 40
VERT 0 5 10
SCALE IN FEET

City of St. Helens FOUNDED 1850

REGISTERED PROFESSIONAL ENGINEER 72,629 OREGON JUNE 11, 2009 KEITH BUISMAN
PRELIMINARY
EXPIRES: 12/31/2023

Otak

Otak, Inc.
808 SW Third Avenue, Ste. 800
Portland, OR 97204
503. 287. 6825
www.otak.com

S. 1ST AND STRAND STREETS ROAD AND UTILITY EXTENSIONS

ST. HELENS, OREGON
STREET AND STORM DRAIN PLAN AND PROFILE

SD-7 STA 0+50 TO 4+00

TITLE

#	DATE	DESCRIPTION

REVISIONS

NAVD88
DATUM

OTAK CAD — KJB
DRAWN BY — CHECKED BY

90% PLANS
STATUS

JANUARY 10, 2022
DATE

19823
PROJECT NUMBER

3R

© 2021 OTAK, INC.

If this drawing is not 22" x 34", it has been reduced/enlarged. Scale accordingly.

Plotted: Jan 10, 2022 - 10:26am, keith.buisman L:\Project\19800\19823\CADD\ACAD\Dwg\C19823C3P0.dwg Layout Name: 3R

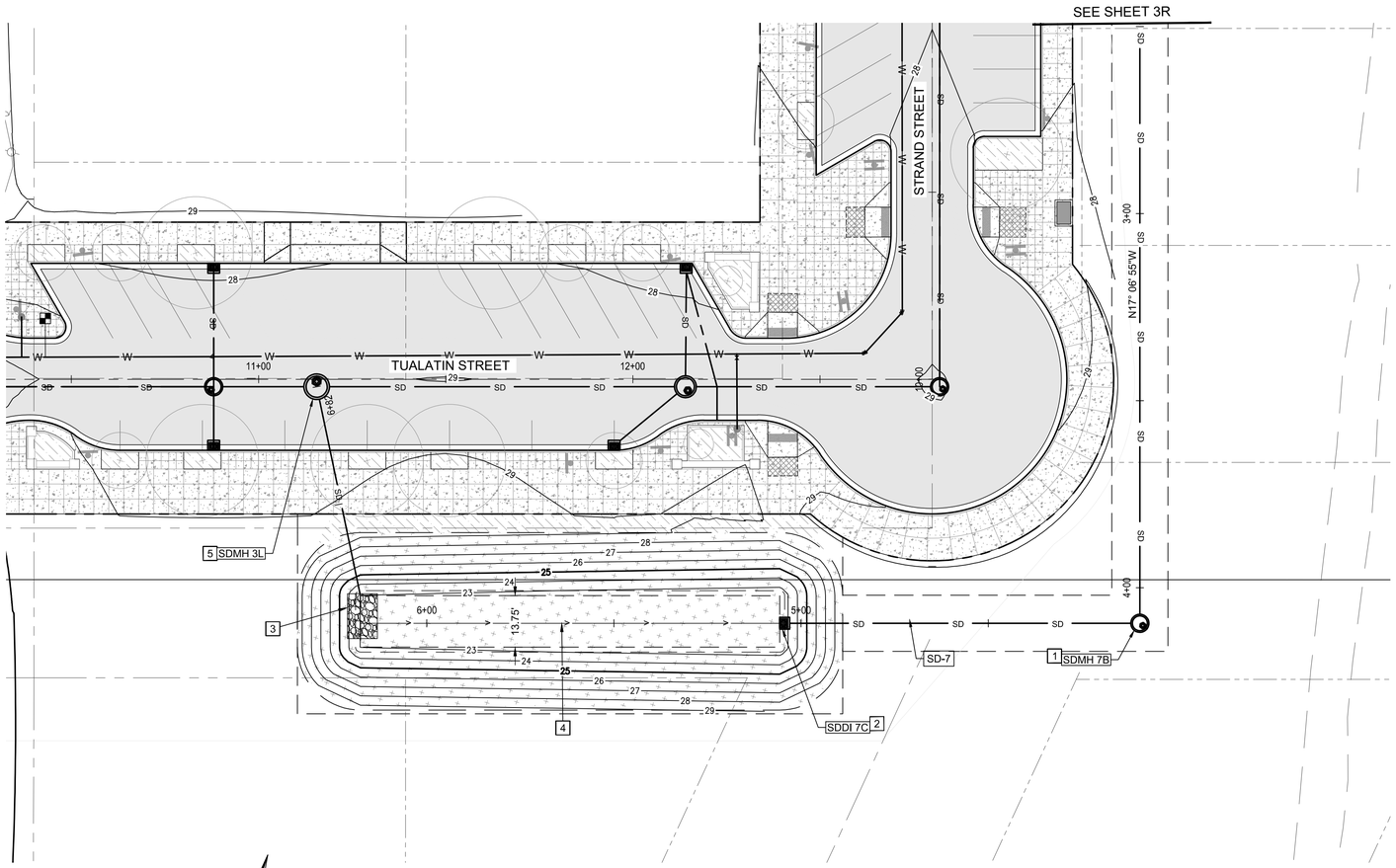

SD-7 STA 4+00 - 6+77

0 20 40
SCALE IN FEET

STORM CONSTRUCTION KEY NOTES

1. CONSTRUCT MANHOLE PER CITY OF ST. HELENS STD 350, SHEET 2B-3. SEE PROFILE FOR SIZE, RIM, AND INVERT INFORMATION.
2. CONSTRUCT DITCH INLET PER CITY OF ST. HELENS STD. 325, SHEET 2B-3. SEE PROFILE FOR RIM AND INVERT ELEVATION.
3. CONSTRUCT 12'L X 8'W X 1.5'THICK ODOT CLASS 200 RIPRAP PAD AT OUTFALL.
4. CONSTRUCT SWALE PER TYPICAL CROSS SECTION BELOW WITH CHECKDAM FLOWSPREADERS SPACED EVERY 50FT
5. CONSTRUCT FLOW SPLIT WATER QUALITY MANHOLE PER CITY OF ST. HELENS STD DETAIL 355, SHEET 2B-4. SEE PROFILE FOR SIZE, RIM, AND INVERT INFORMATION.`

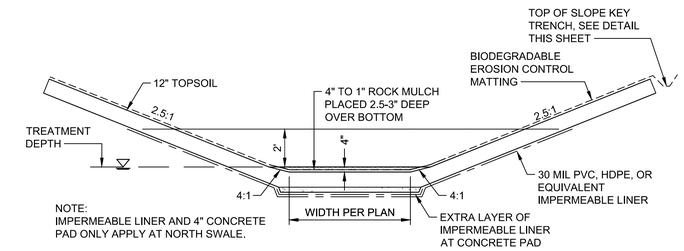

TYPICAL SWALE CROSS-SECTION

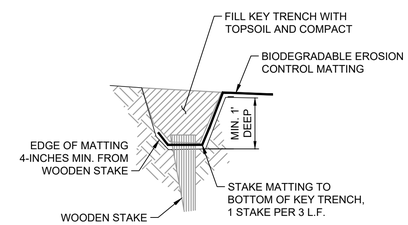

KEY TRENCH

N.T.S.

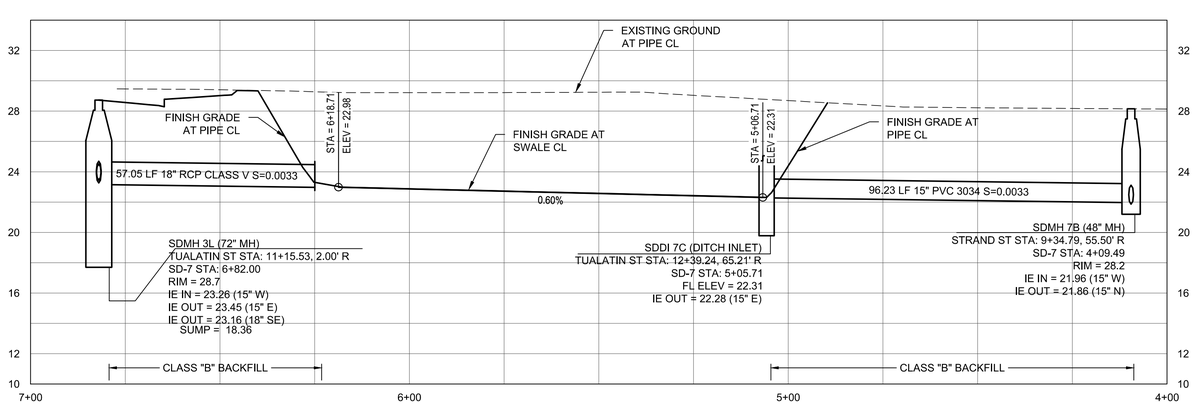

SD-7 STA 4+00 - 6+77

HORZ 0 20 40
VERT 0 5 10
SCALE IN FEET

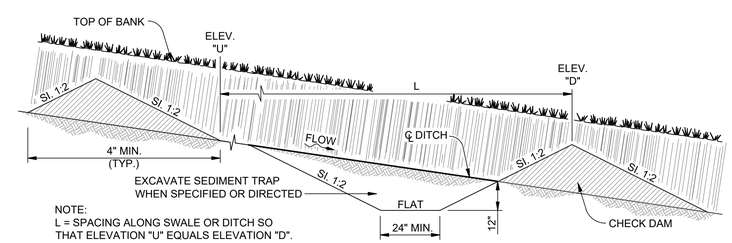

TYPICAL PROFILE SECTION CHECK DAMS

(SHOWN WITH AGGREGATE)
N.T.S.

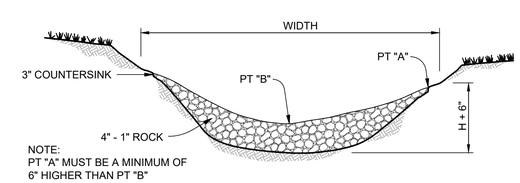

AGGREGATE CHECK DAM - TYPE 1

N.T.S.

City of St. Helens FOUNDED 1850

REGISTERED PROFESSIONAL ENGINEER 72,629 OREGON JUNE 11, 2008 KEITH BUISMAN
PRELIMINARY
EXPIRES: 12/31/2023

Otak
Otak, Inc.
808 SW Third Avenue, Ste. 800
Portland, OR 97204
503. 287. 6825
www.otak.com

S. 1ST AND STRAND STREETS ROAD AND UTILITY EXTENSIONS

ST. HELENS, OREGON
STREET AND STORM DRAIN PLAN AND PROFILE

SD-7 STA 4+00 TO 6+77

TITLE

#	DATE	DESCRIPTION

REVISIONS

NAVD88
DATUM

OTAK CAD — KJB
DRAWN BY — CHECKED BY

90% PLANS
STATUS

JANUARY 10, 2022
DATE

19823
PROJECT NUMBER

3S

© 2021 OTAK, INC.

If this drawing is not 22" x 34", it has been reduced/enlarged. Scale accordingly.

Plotted: Jan 10, 2022 - 10:26am, keith.buisman L:\Project\19800\19823\CAD\ACAD\Dwg\C19823C3P0.dwg Layout Name: 3S

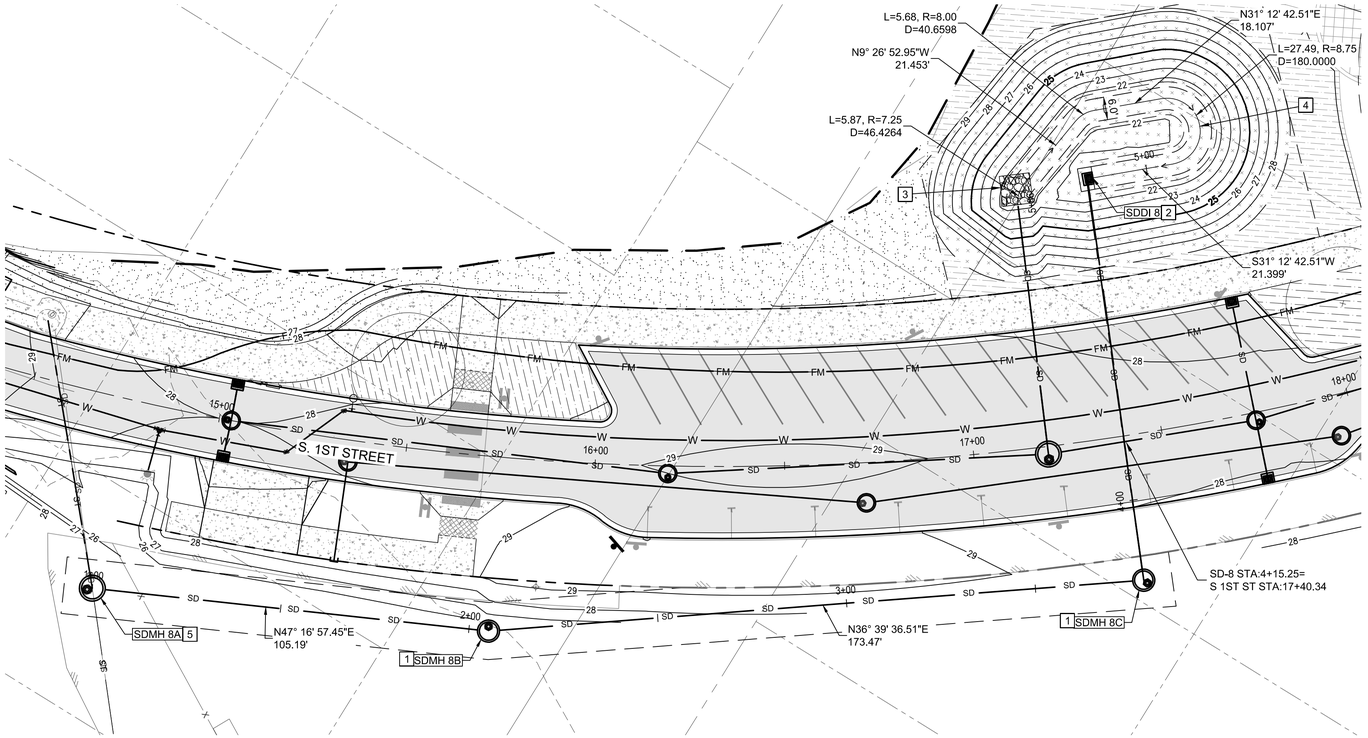

SD-8 STA 1+00 - 4+85

SCALE IN FEET

STORM CONSTRUCTION KEY NOTES

1. CONSTRUCT MANHOLE PER CITY OF ST. HELENS STD 350, SHEET 2B-3. SEE PROFILE FOR SIZE, RIM, AND INVERT INFORMATION.
2. CONSTRUCT DITCH INLET PER CITY OF ST. HELENS STD 325, SHEET 2B-3. SEE PROFILE FOR RIM AND INVERT INFORMATION.
3. CONSTRUCT 8'L X 8'W X 1.5'THICK ODOT CLASS 150 RIPRAP PAD AT OUTFALL.
4. CONSTRUCT SWALE PER TYPICAL CROSS SECTION BELOW WITH CHECKDAM FLOWSPREADERS SPACED EVERY 50FT
5. CONSTRUCT MANHOLE OVER EXISTING STORM LINE PER CITY OF ST. HELENS STD 350, SHEET 2B-3. SEE PROFILE FOR SIZE, RIM, AND INVERT INFORMATION.

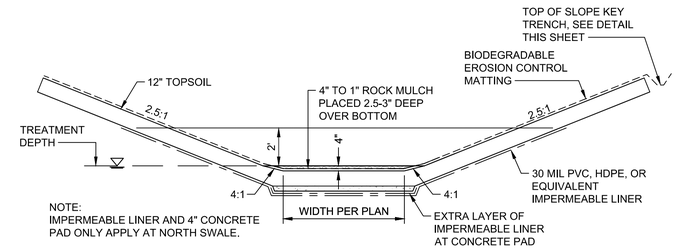

TYPICAL SWALE CROSS-SECTION

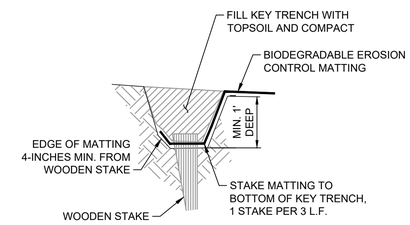

KEY TRENCH

N.T.S.

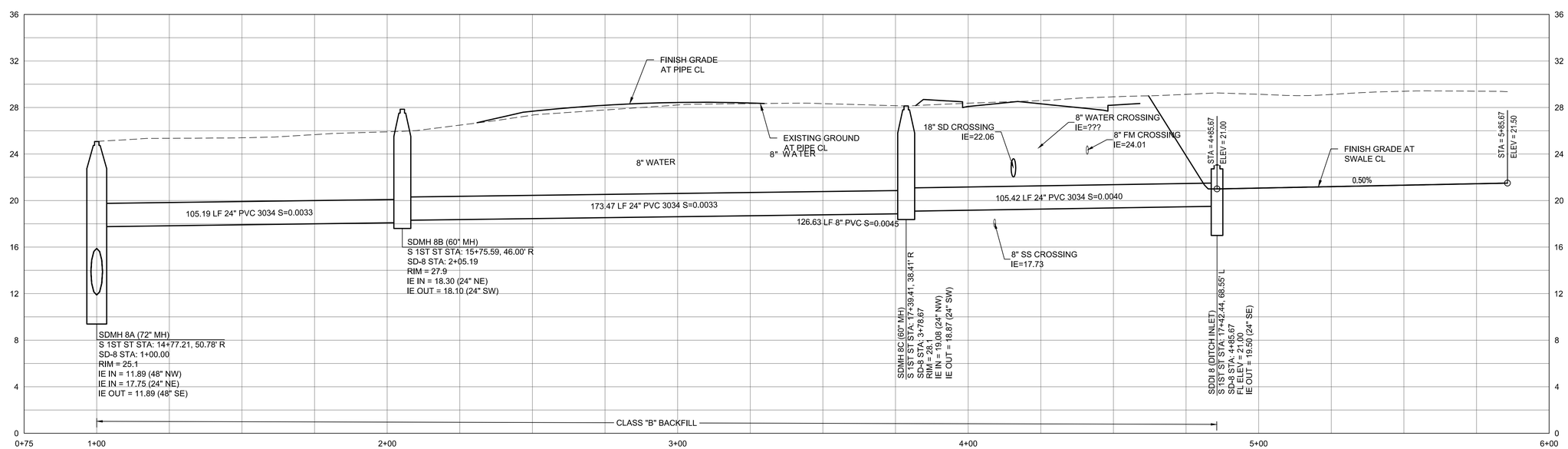

SD-8 STA 1+00 - 4+85

HORZ 0 20 40

VERT 0 5 10

SCALE IN FEET

City of St. Helens FOUNDED 1850

REGISTERED PROFESSIONAL ENGINEER 72,629 OREGON JUNE 11, 2008 KEITH BUISMAN

PRELIMINARY

EXPIRES: 12/31/2023

Otak

Otak, Inc.
808 SW Third Avenue, Ste. 800
Portland, OR 97204
503. 287. 6825
www.otak.com

S. 1ST AND STRAND STREETS ROAD AND UTILITY EXTENSIONS

ST. HELENS, OREGON
STREET AND STORM DRAIN PLAN AND PROFILE

SD-8 STA 1+00 TO 4+85

TITLE		
#	DATE	DESCRIPTION

REVISIONS

NAVD88
DATUM

OTAK CAD — KJB
DRAWN BY — CHECKED BY

90% PLANS
STATUS

JANUARY 10, 2022
DATE

19823
PROJECT NUMBER

3T

© 2021 OTAK, INC.

If this drawing is not 22" x 34", it has been reduced/enlarged. Scale accordingly.

PlotTest: Jan 10, 2022 - 10:27am keith.buisman L:\Project\19800\19823\CADD\ACAD\Dwg\C19823-2PD.dwg Layout Name: 3T

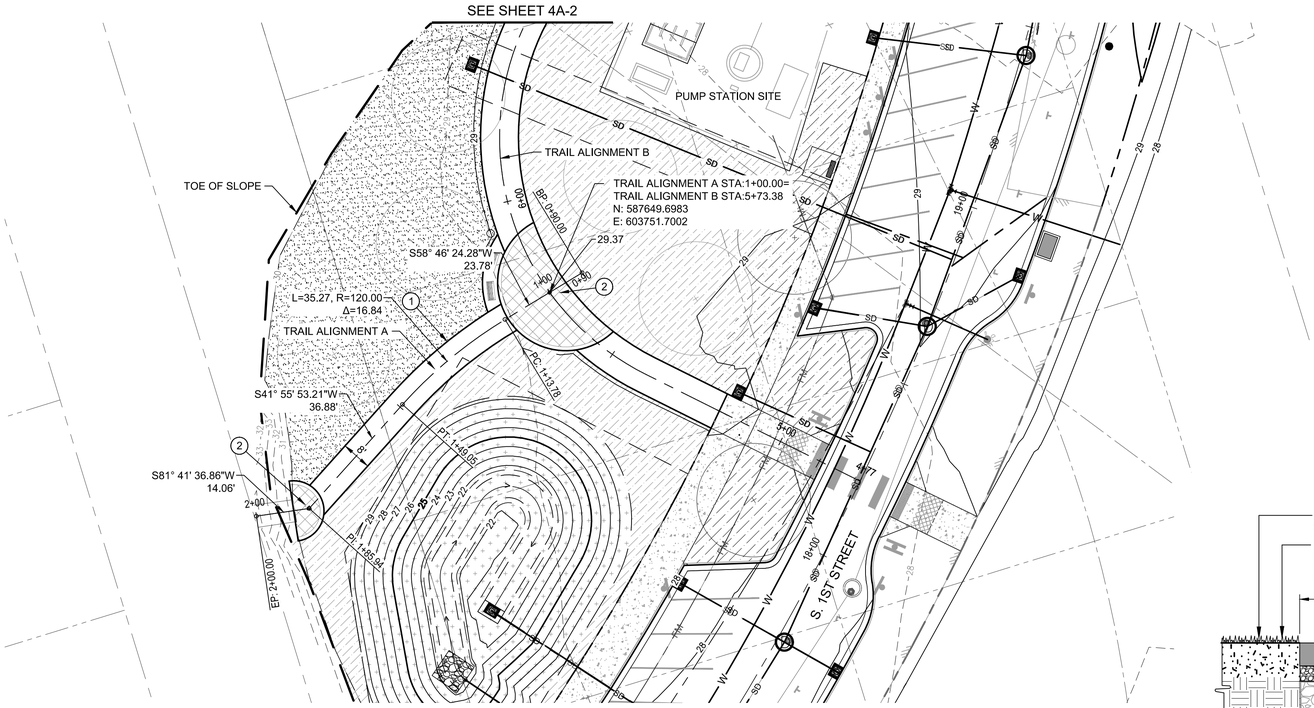

TRAIL ALIGNMENT A

0 20 40
SCALE IN FEET

TRAIL CONSTRUCTION KEY NOTES

1. CONSTRUCT AC PATH PER DETAIL THIS SHEET.
2. CONSTRUCT CONCRETE PATH PER DETAIL 220, SHEET 2B-1. SEE LANDSCAPE PLANS FOR SCORING DETAIL.

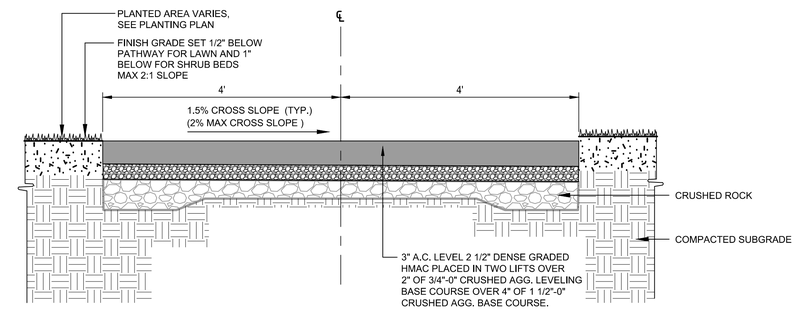

AC PATHWAY - TRAIL ALIGNMENT "A"

N.T.S.

1 / 4A-1

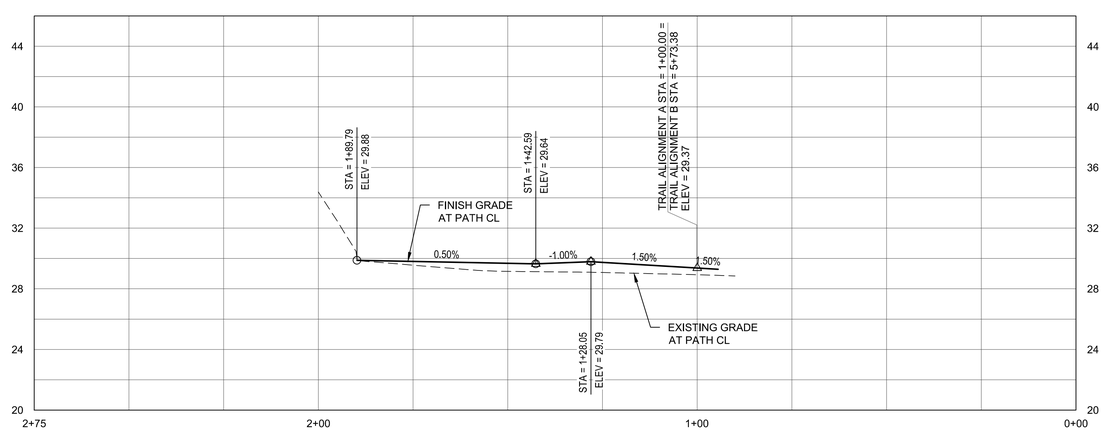

TRAIL ALIGNMENT A PROFILE

HORZ 0 20 40
VERT 0 5 10
SCALE IN FEET

City of St. Helens
FOUNDED 1850

REGISTERED PROFESSIONAL ENGINEER
72,629
OREGON
JUNE 11, 2008
KEITH BUISMAN
PRELIMINARY
EXPIRES: 12/31/2023

Otak

Otak, Inc.
808 SW Third Avenue, Ste. 800
Portland, OR 97204
503. 287. 6825
www.otak.com

S. 1ST AND STRAND STREETS ROAD AND UTILITY EXTENSIONS

ST. HELENS, OREGON
TRAIL PLANS

TRAIL ALIGNMENT A

TITLE

#	DATE	DESCRIPTION

REVISIONS

NAVD88
DATUM

OTAK CAD — KJB
DRAWN BY — CHECKED BY

90% PLANS
STATUS

JANUARY 10, 2022
DATE

19823
PROJECT NUMBER

4A-1

© 2021 OTAK, INC.

If this drawing is not 22" x 34", it has been reduced/enlarged. Scale accordingly.

Plotted: Jan 10, 2022 - 1:21pm keith.buisman L:\Project\19800\19823\CADD\ACAD\Dwg\C19823A.dwg Layout Name: 4A-1

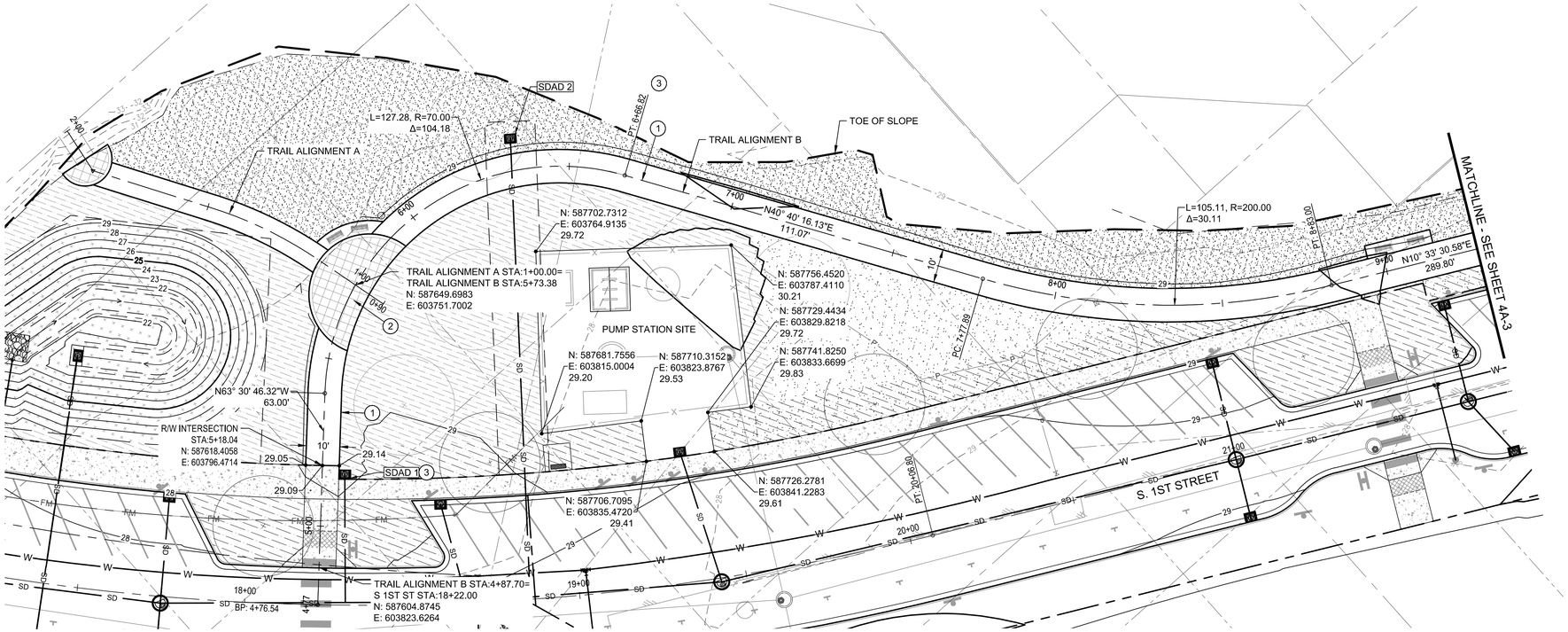

TRAIL ALIGNMENT B STA 4+77 TO 9+25

0 20 40
SCALE IN FEET

TRAIL CONSTRUCTION KEY NOTES

1. CONSTRUCT AC PATH TRAIL ALIGNMENT "B" PER DETAIL THIS SHEET .
2. CONSTRUCT CONCRETE PATH PER DETAIL 220, SHEET 2B-1. SEE LANDSCAPE PLANS FOR SCORING DETAIL.
3. CONSTRUCT AREA DRAIN PER DETAIL RD374, SHEET 2B-4

AREA DRAIN DATA					
NO.	STR STA./ OFFSET	RIM ELEV	IE OUT	LENGTH/ SIZE	SLOPE
SDAD 1	S 1ST ST 18+29.56 37.50' L	29.1	23.76	37 LF 6" PVC	0.020
SDAD 2	COWLITZ ST ??? ??? ???	28.8	26.21	135 LF 6" PVC	0.020

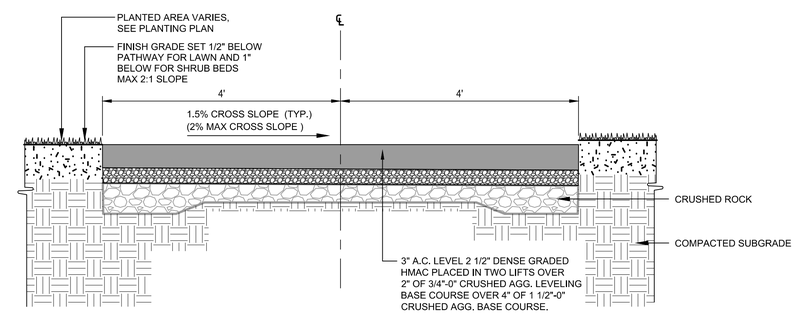

AC PATHWAY - TRAIL ALIGNMENT "B"

N.T.S.

1 / 4A-2

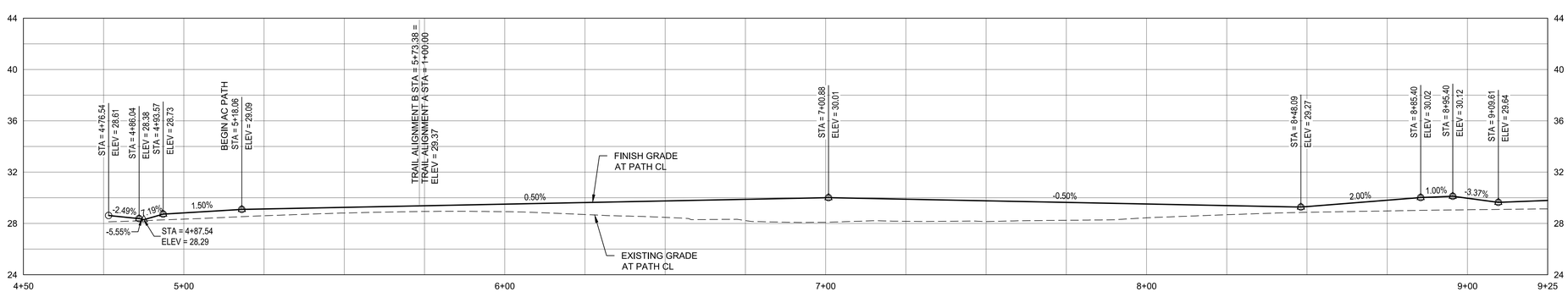

TRAIL ALIGNMENT B PROFILE STA. 4+77 TO 9+25

HORZ 0 20 40
VERT 0 5 10
SCALE IN FEET

City of St. Helens FOUNDED 1850

REGISTERED PROFESSIONAL ENGINEER 72,629 OREGON JUNE 11, 2008 KEITH BUISMAN
PRELIMINARY
EXPIRES: 12/31/2023

Otak

Otak, Inc.
808 SW Third Avenue, Ste. 800
Portland, OR 97204
503. 287. 6825
www.otak.com

S. 1ST AND STRAND STREETS ROAD AND UTILITY EXTENSIONS

ST. HELENS, OREGON
TRAIL PLANS

TRAIL ALIGNMENT B STA 4+77 TO 9+25

TITLE

#	DATE	DESCRIPTION

REVISIONS

NAVD88
DATUM

OTAK CAD — KJB
DRAWN BY — CHECKED BY

90% PLANS
STATUS

JANUARY 10, 2022
DATE

19823
PROJECT NUMBER

4A-2

© 2021 OTAK, INC.

If this drawing is not 22" x 34", it has been reduced/enlarged. Scale accordingly.

Plotted: Jan 10, 2022 - 7:21pm keith.buisman L:\Project\19800\19823\CADD\ACAD\Dwg\Cl19823A.dwg Layout Name: 4A-2

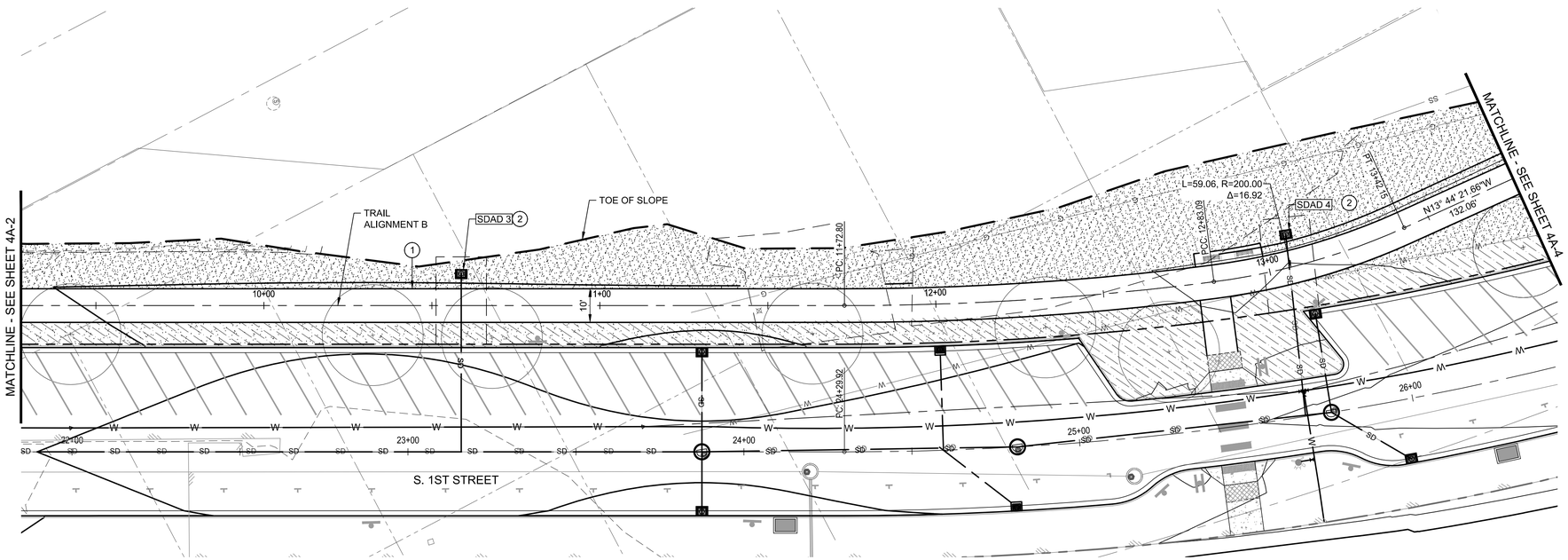

TRAIL ALIGNMENT B STA 9+25 TO 13+75

0 20 40
SCALE IN FEET

TRAIL CONSTRUCTION KEY NOTES

1. CONSTRUCT AC PATH TRAIL ALIGNMENT "B" PER DETAIL SHEET 4A-2.
2. CONSTRUCT AREA DRAIN PER DETAIL RD374, SHEET 2B-4

AREA DRAIN DATA					
NO.	STR STA./ OFFSET	RIM ELEV	IE OUT	LENGTH/ SIZE	SLOPE
SDAD 3	S 1ST ST 23+15.84 51.47' L	29.3	26.68	51 LF 6" PVC	0.020

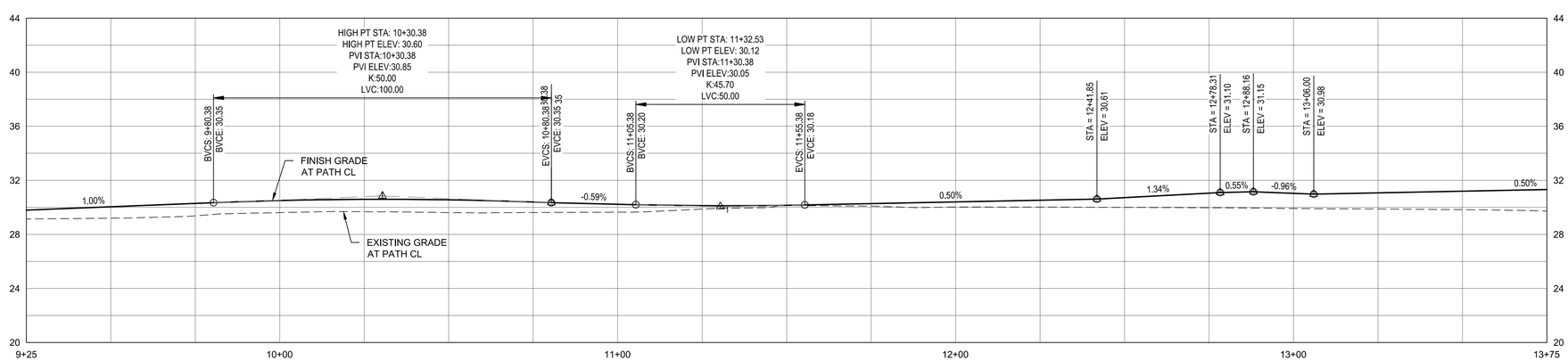

TRAIL ALIGNMENT B PROFILE STA 9+25 TO 13+75

HORZ 0 20 40
VERT 0 5 10
SCALE IN FEET

City of St. Helens FOUNDED 1850

REGISTERED PROFESSIONAL ENGINEER 72,629 OREGON JUNE 11, 2008 KEITH BUISMAN
PRELIMINARY
EXPIRES: 12/31/2023

Otak
Otak, Inc.
808 SW Third Avenue, Ste. 800
Portland, OR 97204
503. 287. 6825
www.otak.com

S. 1ST AND STRAND STREETS ROAD AND UTILITY EXTENSIONS

ST. HELENS, OREGON
TRAIL PLANS

TRAIL ALIGNMENT B STA 9+25 TO 13+75

TITLE

#	DATE	DESCRIPTION

REVISIONS

NAVD88
DATUM

OTAK CAD — KJB
DRAWN BY — CHECKED BY

90% PLANS
STATUS

JANUARY 10, 2022
DATE

19823
PROJECT NUMBER

4A-3

© 2021 OTAK, INC.

If this drawing is not 22" x 34", it has been reduced/enlarged. Scale accordingly.

Plotted: Jan 10, 2022 - 7:22pm keith.buisman L:\Project\19800\19823\CADD\ACAD\Dwg\C198234A.dwg Layout Name: 4A-3

TRAIL ALIGNMENT B STA 13+75 TO 16+00

0 20 40
SCALE IN FEET

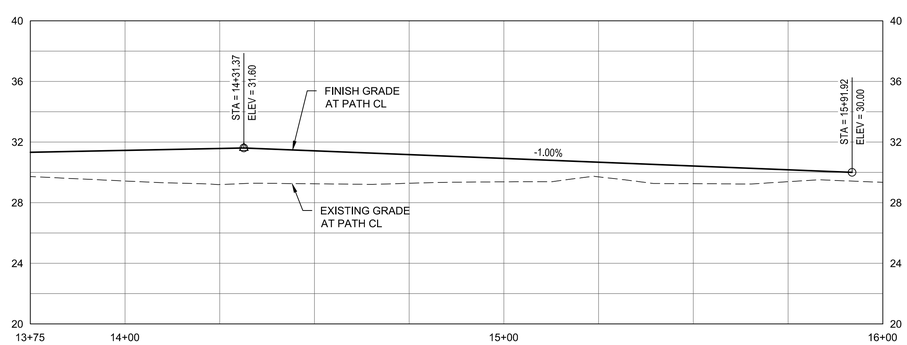

TRAIL ALIGNMENT B PROFILE STA 13+75 TO 16+00

HORZ 0 20 40
VERT 0 5 10
SCALE IN FEET

TRAIL CONSTRUCTION KEY NOTES

1. CONSTRUCT AC PATH TRAIL ALIGNMENT "B" PER DETAIL SHEET 4A-2.
2. CONSTRUCT CONCRETE PATH PER DETAIL, SHEET 2A-3SEE LANDSCAPE PLANS FOR SCORING DETAIL.

City of St. Helens
FOUNDED 1850

REGISTERED PROFESSIONAL ENGINEER
72,629
PRELIMINARY
OREGON
JUNE 11, 2008
KEITH BUISMAN
EXPIRES: 12/31/2023

Otak
Otak, Inc.
808 SW Third Avenue, Ste. 800
Portland, OR 97204
503. 287. 6825
www.otak.com

S. 1ST AND STRAND STREETS ROAD AND UTILITY EXTENSIONS

ST. HELENS, OREGON
TRAIL PLANS

TRAIL ALIGNMENT B STA 13+75 TO 16+00

TITLE

#	DATE	DESCRIPTION

REVISIONS

NAVD88
DATUM

OTAK CAD — KJB
DRAWN BY — CHECKED BY

90% PLANS
STATUS

JANUARY 10, 2022
DATE

19823
PROJECT NUMBER

4A-4

© 2021 OTAK, INC.

If this drawing is not 22" x 34", it has been reduced/enlarged. Scale accordingly.

Plotted: Jan 10, 2022 - 1:22pm keith.buisman L:\Project\19800\19823\CADD\ACAD\Dwg\C19823A.dwg Layout Name: 4A-4

GENERAL NOTES

1. LANDSCAPE DOCUMENTS ARE BASED ON A SURVEY BY OTAK, INC. DATED MARCH 19, 2021. NOTIFY CITY OF ANY DISCREPANCIES IDENTIFIED ON SITE RELATED TO SURVEY INFORMATION PRIOR TO INSTALLATION.
2. REFERENCE CIVIL DRAWINGS FOR STREET AND TRAIL ALIGNMENT AND LAYOUT.
3. REFERENCE ILLUMINATION PLANS FOR LIGHTING.
4. FOR SITE REMOVALS AND TREE PROTECTION REFERENCE DEMOLITION PLANS.
5. IMPROVEMENTS WITHIN THE RIGHT OF WAY AND TRAIL ALIGNMENTS ARE FOR REFERENCE ONLY. REFERENCE CIVIL PLANS.

GENERAL LEGEND

- ROW LINE
- LIGHT POLE, REF. ELEC.
- BOLLARD
- EXISTING TREE TO REMAIN
- PROPOSED TREE
- BENCH
- WATER FOUNTAIN
- BASALT COLUMN
- BIKE RACK
- PET WASTE BAG DISPENSER
- TRASH CAN
- PAVER BAND
- PLANTING AREA
- SEEDING AREA
- STORMWATER PLANTING

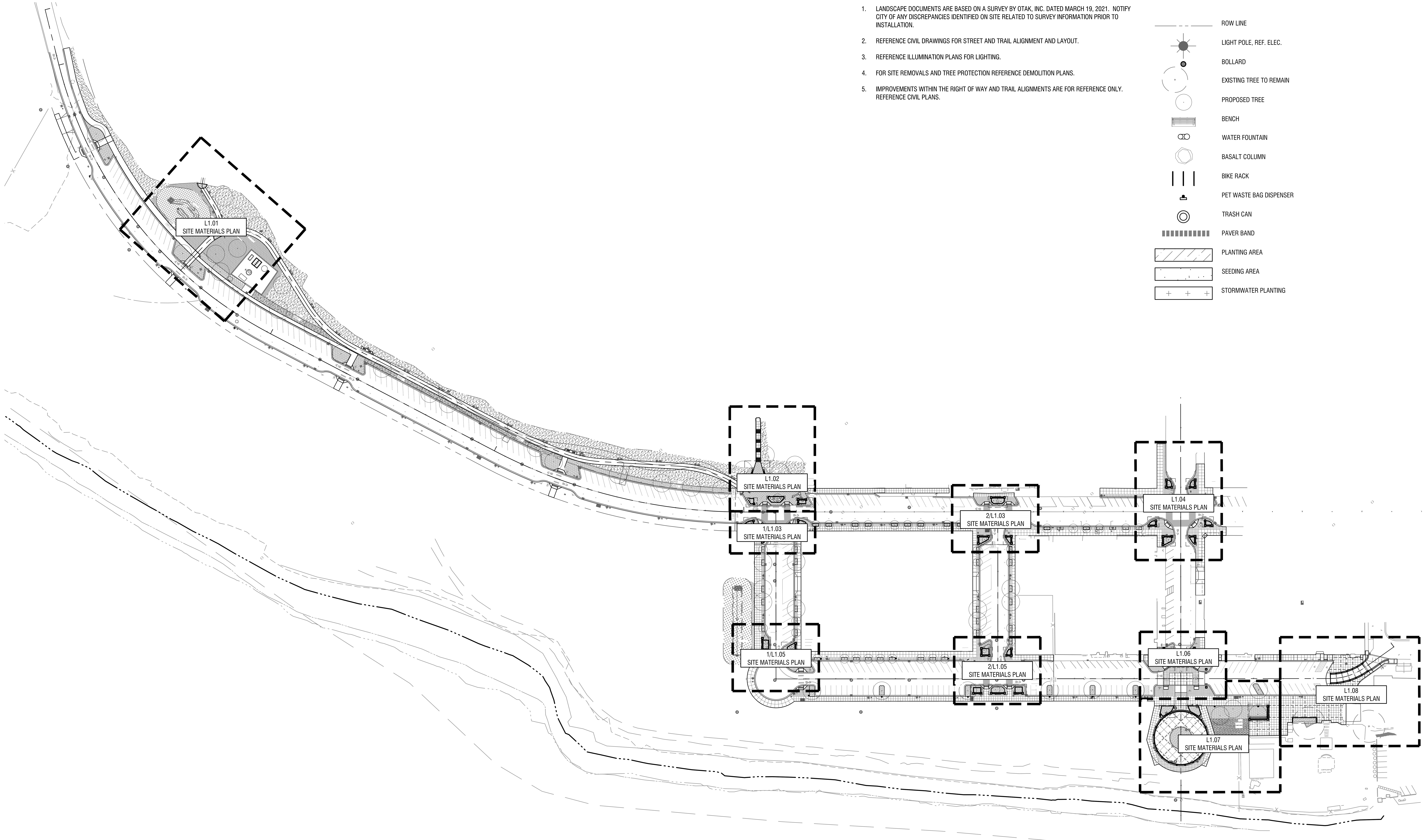

1 SITE MATERIALS KEY PLAN
SCALE: 1" = 80'-0"

0 40' 80' 160'

N

Plotted: Jan 07, 2022 - 7:36pm ssimms M:\1 LA PROJECTS\SHS-21014\2. DRAWINGS\1. CAD\4. SHEETS\L100-Site Plans.dwg Layout Name: L1.00

City of St. Helens
FOUNDED 1850

PRELIMINARY

S. 1ST AND STRAND STREETS ROAD AND UTILITY EXTENSIONS

ST. HELENS, OREGON
SITE MATERIALS PLANS

SITE MATERIALS KEY PLANS

TITLE

#	DATE	DESCRIPTION

REVISIONS

DATUM

MS — DRAWN BY
SVS — CHECKED BY

90% DESIGN — STATUS

JANUARY 10, 2021 — DATE

19823 — PROJECT NUMBER

L1.00

© 2021 OTAK, INC.

If this drawing is not 22" x 34", it has been reduced/enlarged. Scale accordingly.

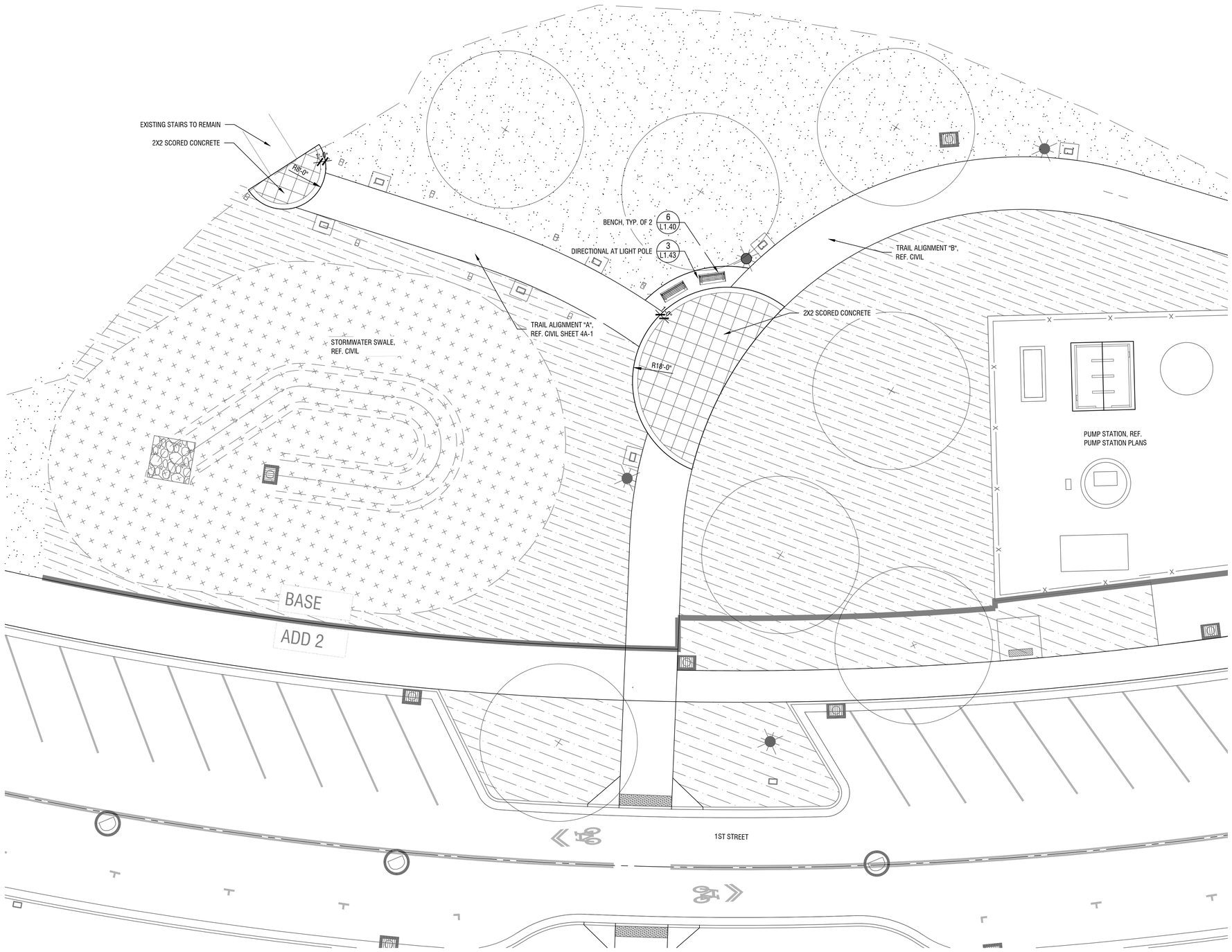

1 **SITE MATERIALS PLAN - BLUFF TRAIL SOUTH TERMINUS**
SCALE: 1"=10'-0"

0 5' 10' 20'

N

GENERAL LEGEND

- ROW LINE
- LIGHT POLE, REF. ELEC.
- BOLLARD
- EXISTING TREE TO REMAIN
- PROPOSED TREE
- BENCH
- WATER FOUNTAIN
- BASALT COLUMN
- BIKE RACK
- PET WASTE BAG DISPENSER
- TRASH CAN
- PAVER BAND
- PLANTING AREA
- SEEDING AREA
- STORMWATER PLANTING

GENERAL NOTES

1. LANDSCAPE DOCUMENTS ARE BASED ON A SURVEY BY OTAK, INC. DATED MARCH 19, 2021. NOTIFY CITY OF ANY DISCREPANCIES IDENTIFIED ON SITE RELATED TO SURVEY INFORMATION PRIOR TO INSTALLATION.
2. REFERENCE CIVIL DRAWINGS FOR STREET AND TRAIL ALIGNMENT AND LAYOUT.
3. REFERENCE ILLUMINATION PLANS FOR LIGHTING.
4. FOR SITE REMOVALS AND TREE PROTECTION REFERENCE DEMOLITION PLANS.
5. IMPROVEMENTS WITHIN THE RIGHT OF WAY AND TRAIL ALIGNMENTS ARE FOR REFERENCE ONLY. REFERENCE CIVIL PLANS.

City of St. Helens
FOUNDED 1850

PRELIMINARY

S. 1ST AND STRAND STREETS ROAD AND UTILITY EXTENSIONS
ST. HELENS, OREGON
SITE MATERIALS PLANS

SITE MATERIALS PLANS

TITLE

#	DATE	DESCRIPTION

REVISIONS

DATUM
MS SVS
DRAWN BY CHECKED BY
90% DESIGN
STATUS
JANUARY 10, 2021
DATE
19823
PROJECT NUMBER

L1.01

© 2021 OTAK, INC.

If this drawing is not 22" x 34", it has been reduced/enlarged. Scale accordingly.

Plotted: Jan 07, 2022 - 7:22am, ssimms M:\11A PROJECTS\SHS-210142_DRAWINGS\1-CADd_SHEETS\L100-Site Plans.dwg Layout Name: L1.01

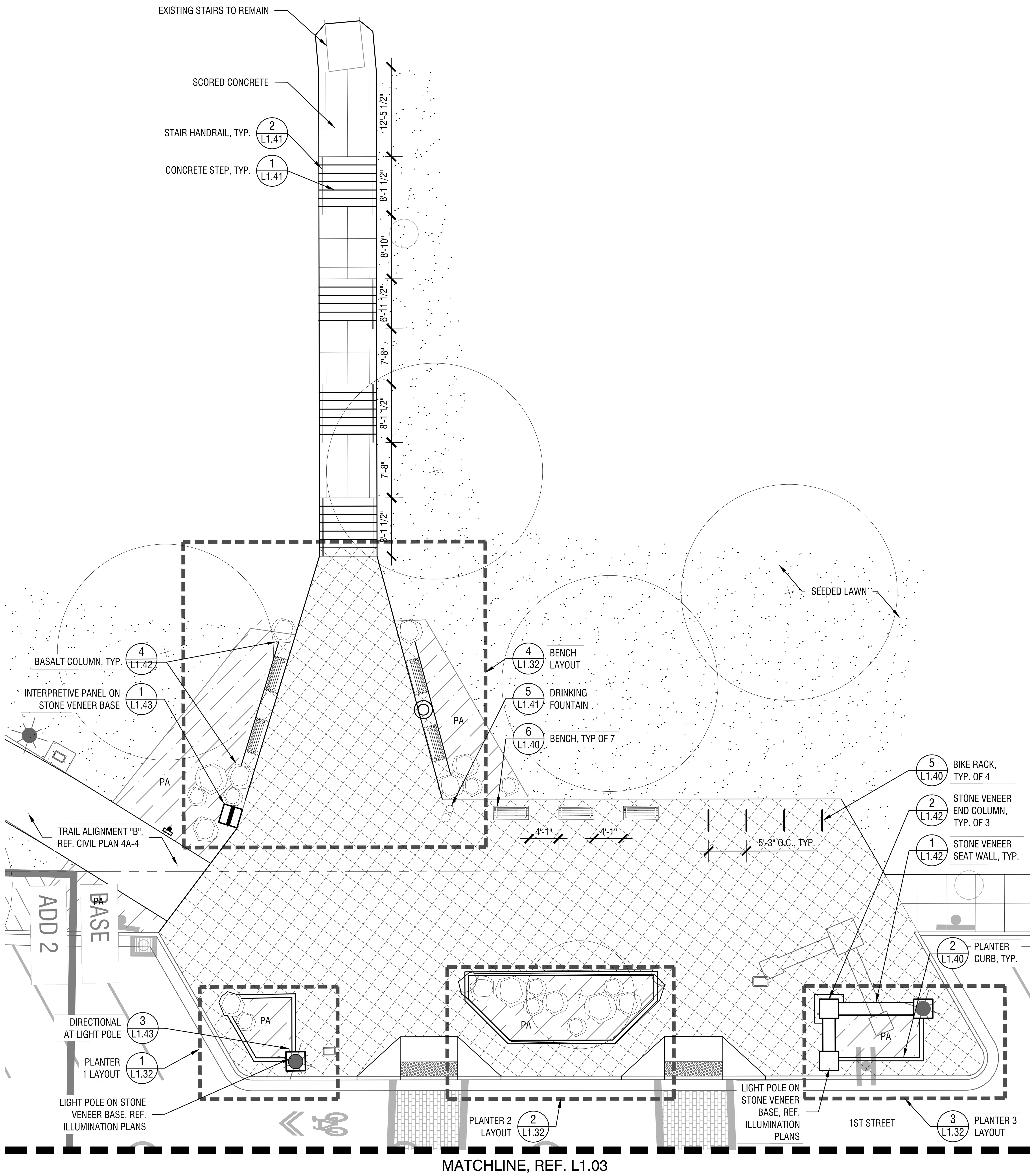

1 SITE MATERIALS PLAN - BLUFF TRAIL NORTH TERMINUS
SCALE: 1" = 10'-0"

GENERAL LEGEND

- ROW LINE
- LIGHT POLE, REF. ELEC.
- BOLLARD
- EXISTING TREE TO REMAIN
- PROPOSED TREE
- BENCH
- WATER FOUNTAIN
- BASALT COLUMN
- BIKE RACK
- PET WASTE BAG DISPENSER
- TRASH CAN
- PAVER BAND
- PLANTING AREA
- SEEDING AREA
- STORMWATER PLANTING

GENERAL NOTES

1. LANDSCAPE DOCUMENTS ARE BASED ON A SURVEY BY OTAK, INC. DATED MARCH 19, 2021. NOTIFY CITY OF ANY DISCREPANCIES IDENTIFIED ON SITE RELATED TO SURVEY INFORMATION PRIOR TO INSTALLATION.
2. REFERENCE CIVIL DRAWINGS FOR STREET AND TRAIL ALIGNMENT AND LAYOUT.
3. REFERENCE ILLUMINATION PLANS FOR LIGHTING.
4. FOR SITE REMOVALS AND TREE PROTECTION REFERENCE DEMOLITION PLANS.
5. IMPROVEMENTS WITHIN THE RIGHT OF WAY AND TRAIL ALIGNMENTS ARE FOR REFERENCE ONLY. REFERENCE CIVIL PLANS.

City of St. Helens FOUNDED 1850

PRELIMINARY

S. 1ST AND STRAND STREETS ROAD AND UTILITY EXTENSIONS

ST. HELENS, OREGON
SITE MATERIALS PLANS

SITE MATERIALS PLANS

TITLE

#	DATE	DESCRIPTION

REVISIONS

DATUM

MS — SVS
DRAWN BY — CHECKED BY

90% DESIGN
STATUS

JANUARY 10, 2021
DATE

19823
PROJECT NUMBER

L1.02

© 2021 OTAK, INC.

If this drawing is not 22" x 34", it has been reduced/enlarged. Scale accordingly.

Plotted: Jan 07, 2022 - 7:22pm ssimms M:\1 LA PROJECTS\SHS-210142_DRAWINGS\1_CAD\4_SHEETS\L100-Site Plans.dwg Layout Name: L1.02

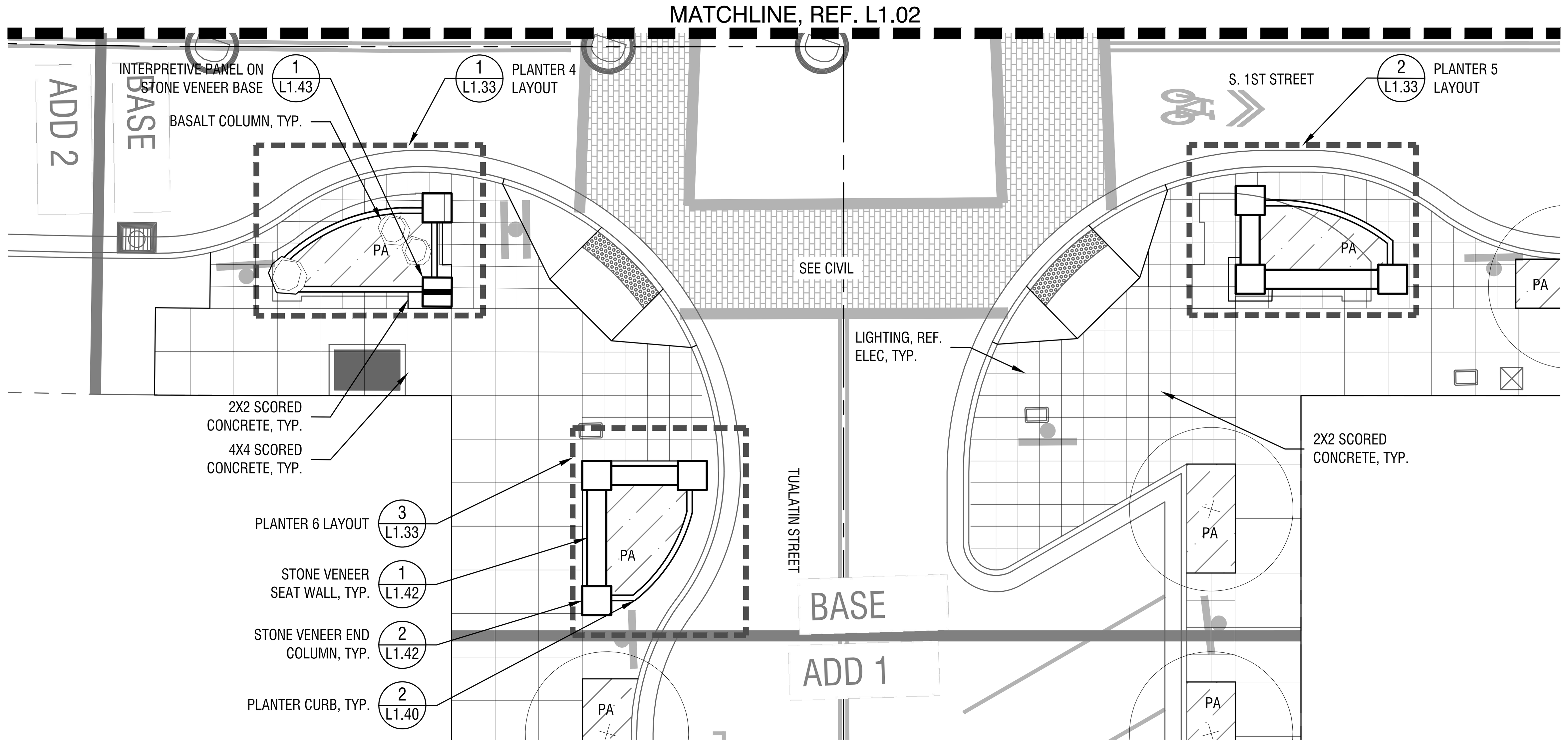

1 **SITE MATERIALS PLAN - 1ST STREET & TUALATIN STREET**
SCALE: 1"= 10'-0"

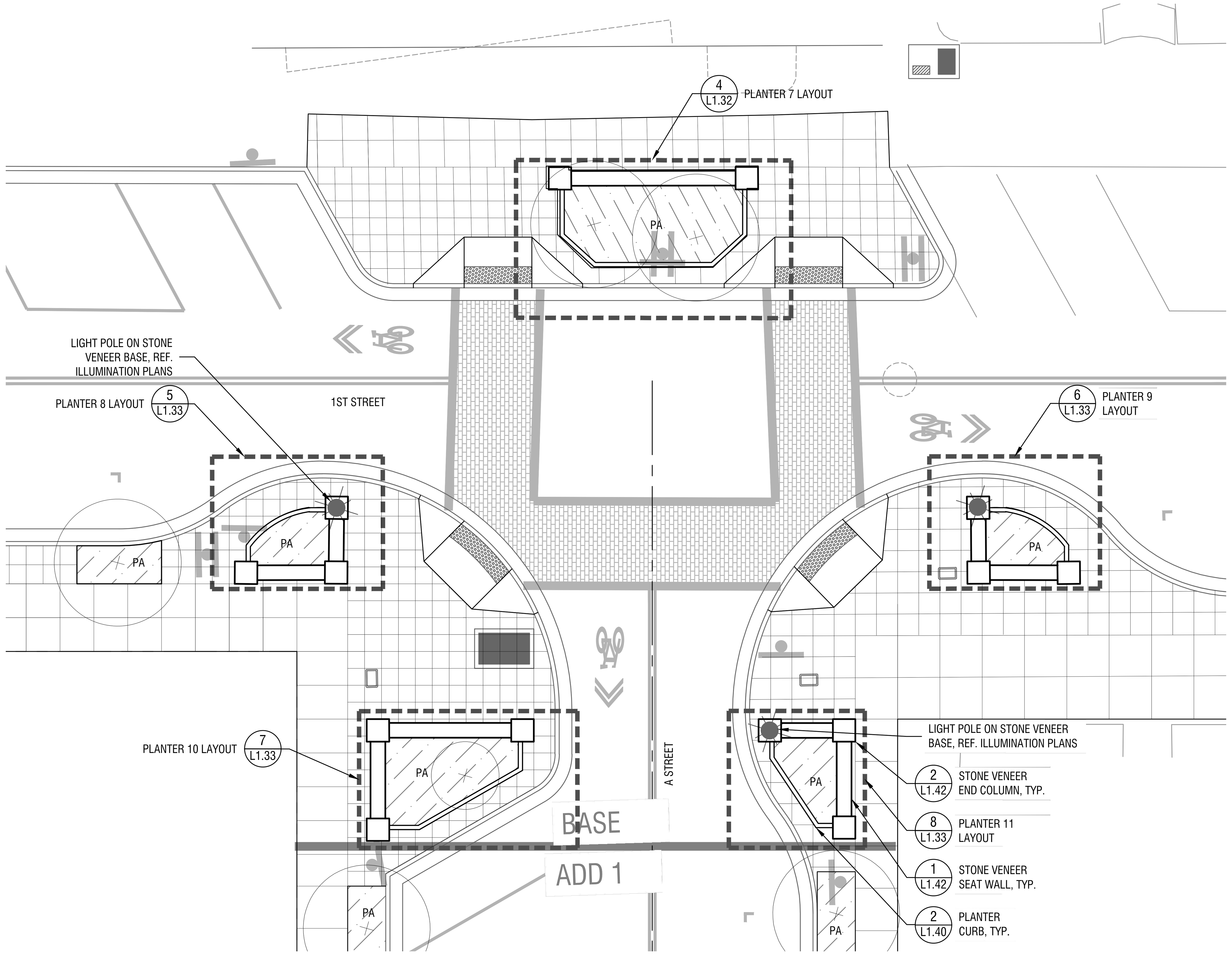

2 **SITE MATERIALS PLAN - 1ST STREET & A STREET**
SCALE: 1"= 10'-0"

GENERAL LEGEND

- ROW LINE
- LIGHT POLE, REF. ELEC.
- BOLLARD
- EXISTING TREE TO REMAIN
- PROPOSED TREE
- BENCH
- WATER FOUNTAIN
- BASALT COLUMN
- BIKE RACK
- PET WASTE BAG DISPENSER
- TRASH CAN
- PAVER BAND
- PLANTING AREA
- SEEDING AREA
- STORMWATER PLANTING

GENERAL NOTES

1. LANDSCAPE DOCUMENTS ARE BASED ON A SURVEY BY OTAK, INC. DATED MARCH 19, 2021. NOTIFY CITY OF ANY DISCREPANCIES IDENTIFIED ON SITE RELATED TO SURVEY INFORMATION PRIOR TO INSTALLATION.
2. REFERENCE CIVIL DRAWINGS FOR STREET AND TRAIL ALIGNMENT AND LAYOUT.
3. REFERENCE ILLUMINATION PLANS FOR LIGHTING.
4. FOR SITE REMOVALS AND TREE PROTECTION REFERENCE DEMOLITION PLANS.
5. IMPROVEMENTS WITHIN THE RIGHT OF WAY AND TRAIL ALIGNMENTS ARE FOR REFERENCE ONLY. REFERENCE CIVIL PLANS.

City of St. Helens
FOUNDED 1850

PRELIMINARY

S. 1ST AND STRAND STREETS ROAD AND UTILITY EXTENSIONS

ST. HELENS, OREGON
SITE MATERIALS PLANS

SITE MATERIALS PLANS

TITLE

#	DATE	DESCRIPTION

REVISIONS

DATUM

MS SVS
DRAWN BY CHECKED BY

90% DESIGN
STATUS

JANUARY 10, 2021
DATE

19823
PROJECT NUMBER

L1.03

© 2021 OTAK, INC.

If this drawing is not 22" x 34", it has been reduced/enlarged. Scale accordingly.

Plotted: Jan 07, 2022 - 7:22pm ssimms M:\1 LA PROJECTS\SHS-21014\2_DRAWINGS\1_CAD\4_SHEETS\L100-Site Plans.dwg Layout Name: L1.03

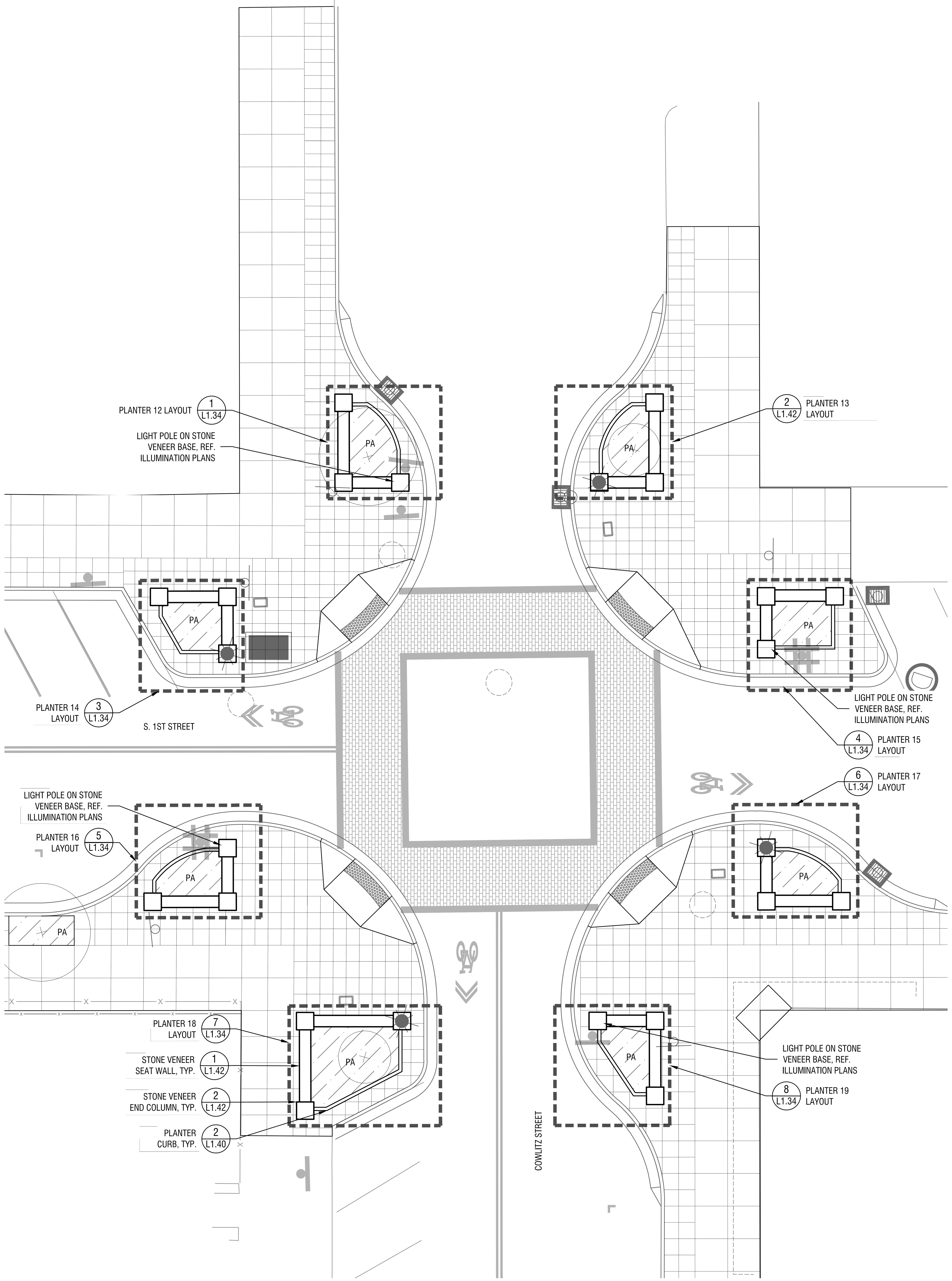

1 SITE MATERIALS PLAN - 1ST STREET & COWLITZ STREET
SCALE: 1"= 10'-0"

0 5' 10' 20'

N

GENERAL LEGEND

- ROW LINE
- LIGHT POLE, REF. ELEC.
- BOLLARD
- EXISTING TREE TO REMAIN
- PROPOSED TREE
- BENCH
- WATER FOUNTAIN
- BASALT COLUMN
- BIKE RACK
- PET WASTE BAG DISPENSER
- TRASH CAN
- PAVER BAND
- PLANTING AREA
- SEEDING AREA
- STORMWATER PLANTING

GENERAL NOTES

1. LANDSCAPE DOCUMENTS ARE BASED ON A SURVEY BY OTAK, INC. DATED MARCH 19, 2021. NOTIFY CITY OF ANY DISCREPANCIES IDENTIFIED ON SITE RELATED TO SURVEY INFORMATION PRIOR TO INSTALLATION.
2. REFERENCE CIVIL DRAWINGS FOR STREET AND TRAIL ALIGNMENT AND LAYOUT.
3. REFERENCE ILLUMINATION PLANS FOR LIGHTING.
4. FOR SITE REMOVALS AND TREE PROTECTION REFERENCE DEMOLITION PLANS.
5. IMPROVEMENTS WITHIN THE RIGHT OF WAY AND TRAIL ALIGNMENTS ARE FOR REFERENCE ONLY. REFERENCE CIVIL PLANS.

City of St. Helens FOUNDED 1850

PRELIMINARY

S. 1ST AND STRAND STREETS ROAD AND UTILITY EXTENSIONS

ST. HELENS, OREGON
SITE MATERIALS PLANS

SITE MATERIALS PLANS

TITLE

#	DATE	DESCRIPTION

REVISIONS

DATUM

MS SVS
DRAWN BY CHECKED BY

90% DESIGN
STATUS

JANUARY 10, 2021
DATE

19823
PROJECT NUMBER

L1.04

© 2021 OTAK, INC.

If this drawing is not 22" x 34", it has been reduced/enlarged. Scale accordingly.

Plotted: Jan 07, 2022 - 7:22pm ssimms M:\1 LA PROJECTS\SHS-210142_DRAWINGS\1_CAD\4_SHEETS\L100-Site Plans.dwg Layout Name: L1.04

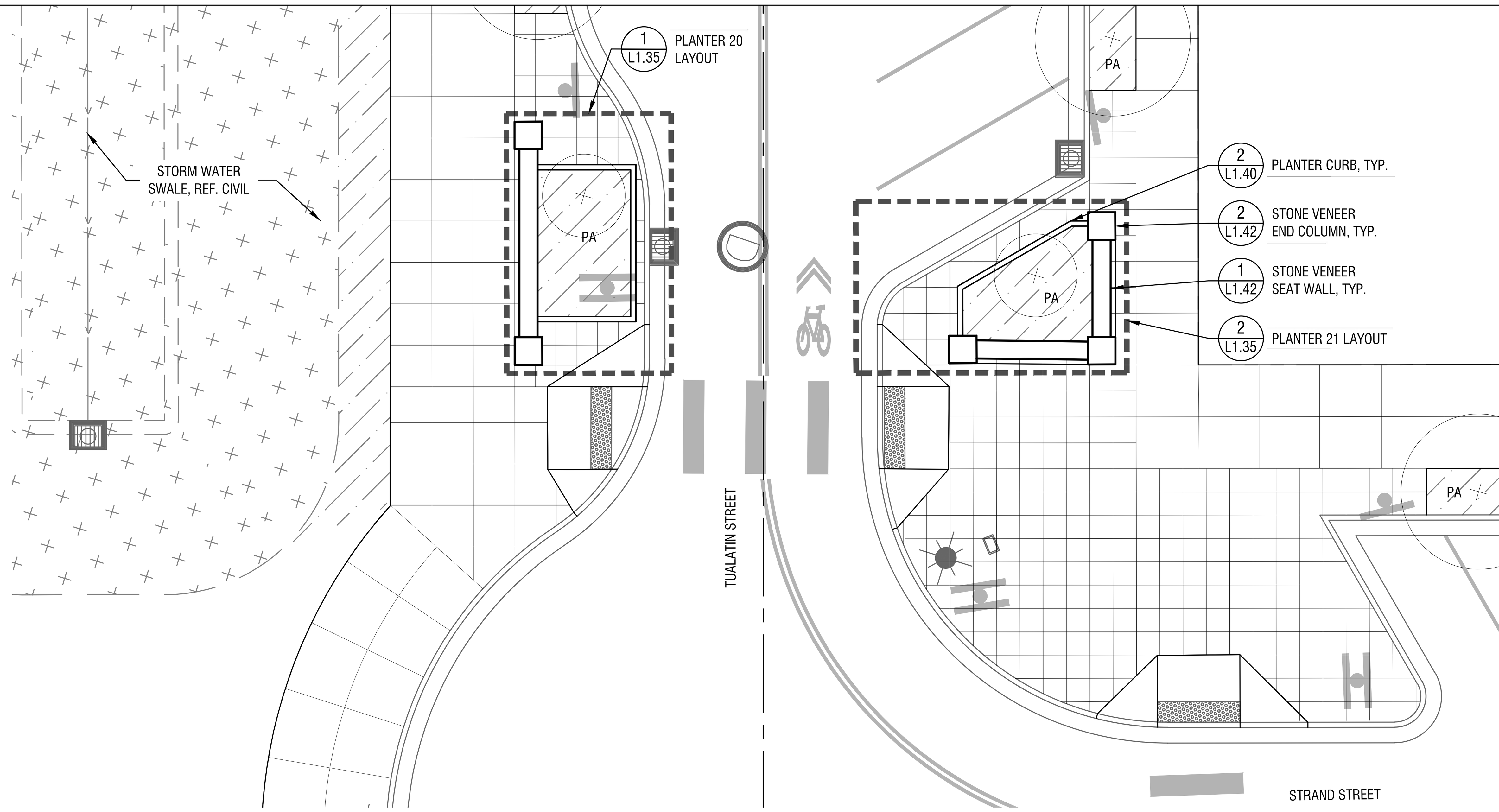

1 **SITE MATERIALS PLAN - STRAND STREET & TUALITIN STREET**
SCALE: 1"= 10'-0"

0 5' 10' 20' N

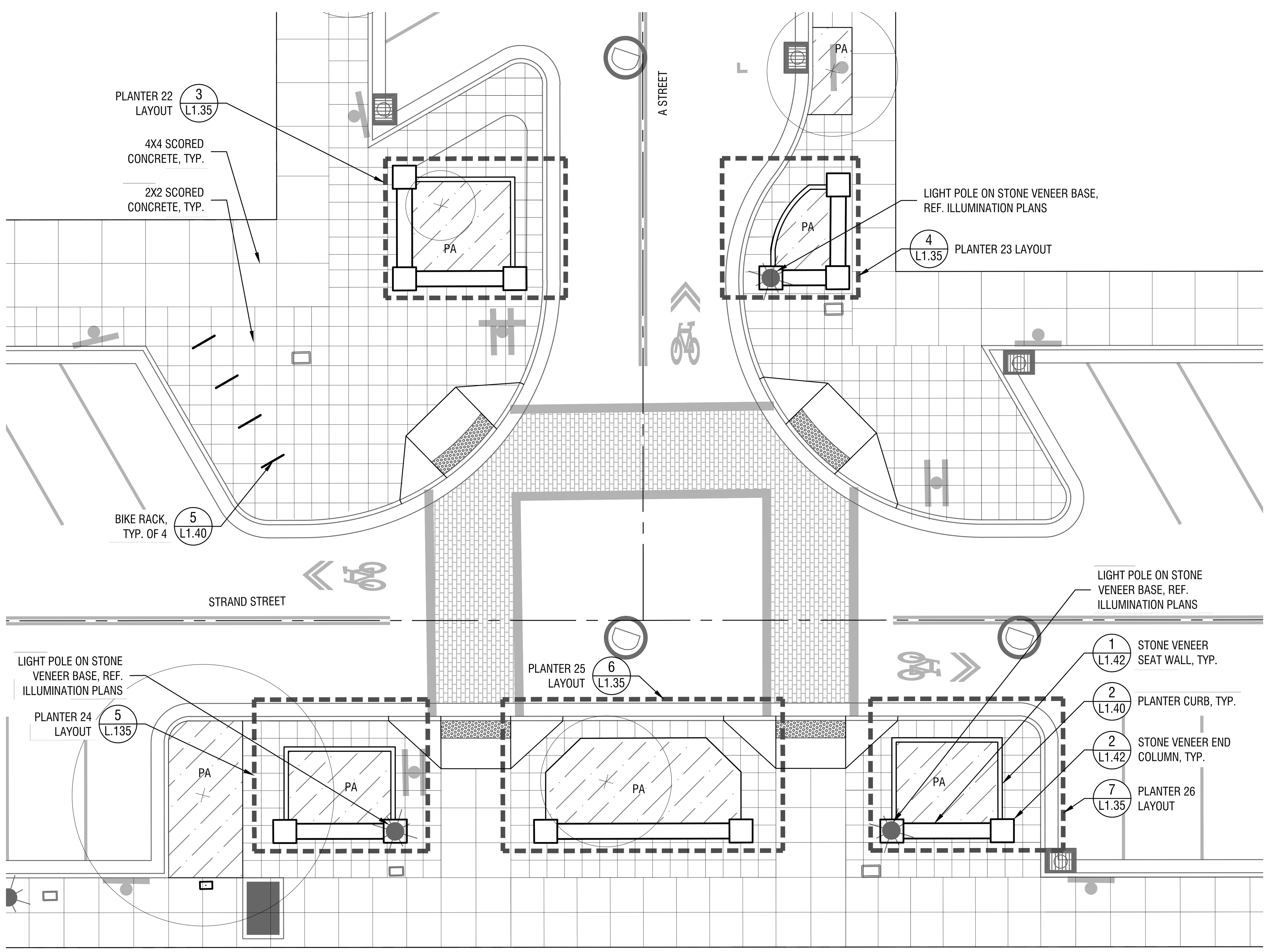

2 **SITE MATERIALS PLAN - STRAND STREET & A STREET**
SCALE: 1"= 10'-0"

0 5' 10' 20' N

GENERAL LEGEND

- ROW LINE
- LIGHT POLE, REF. ELEC.
- BOLLARD
- EXISTING TREE TO REMAIN
- PROPOSED TREE
- BENCH
- WATER FOUNTAIN
- BASALT COLUMN
- BIKE RACK
- PET WASTE BAG DISPENSER
- TRASH CAN
- PAVER BAND
- PLANTING AREA
- SEEDING AREA
- STORMWATER PLANTING

GENERAL NOTES

1. LANDSCAPE DOCUMENTS ARE BASED ON A SURVEY BY OTAK, INC. DATED MARCH 19, 2021. NOTIFY CITY OF ANY DISCREPANCIES IDENTIFIED ON SITE RELATED TO SURVEY INFORMATION PRIOR TO INSTALLATION.
2. REFERENCE CIVIL DRAWINGS FOR STREET AND TRAIL ALIGNMENT AND LAYOUT.
3. REFERENCE ILLUMINATION PLANS FOR LIGHTING.
4. FOR SITE REMOVALS AND TREE PROTECTION REFERENCE DEMOLITION PLANS.
5. IMPROVEMENTS WITHIN THE RIGHT OF WAY AND TRAIL ALIGNMENTS ARE FOR REFERENCE ONLY. REFERENCE CIVIL PLANS.

City of St. Helens FOUNDED 1850

PRELIMINARY

S. 1ST AND STRAND STREETS ROAD AND UTILITY EXTENSIONS

ST. HELENS, OREGON
SITE MATERIALS PLANS

SITE MATERIALS PLANS

TITLE

#	DATE	DESCRIPTION

REVISIONS

DATUM
MS SVS
DRAWN BY CHECKED BY
90% DESIGN
STATUS
JANUARY 10, 2021
DATE
19823
PROJECT NUMBER

L1.05

© 2021 OTAK, INC.

If this drawing is not 22" x 34", it has been reduced/enlarged. Scale accordingly.

Plotted: Jan 07, 2022 - 7:23pm ssimms M:\1 LA PROJECTS\SHS-210142_DRAWINGS\1_CAD\4_SHEETS\L100-Site Plans.dwg Layout Name: L1.05

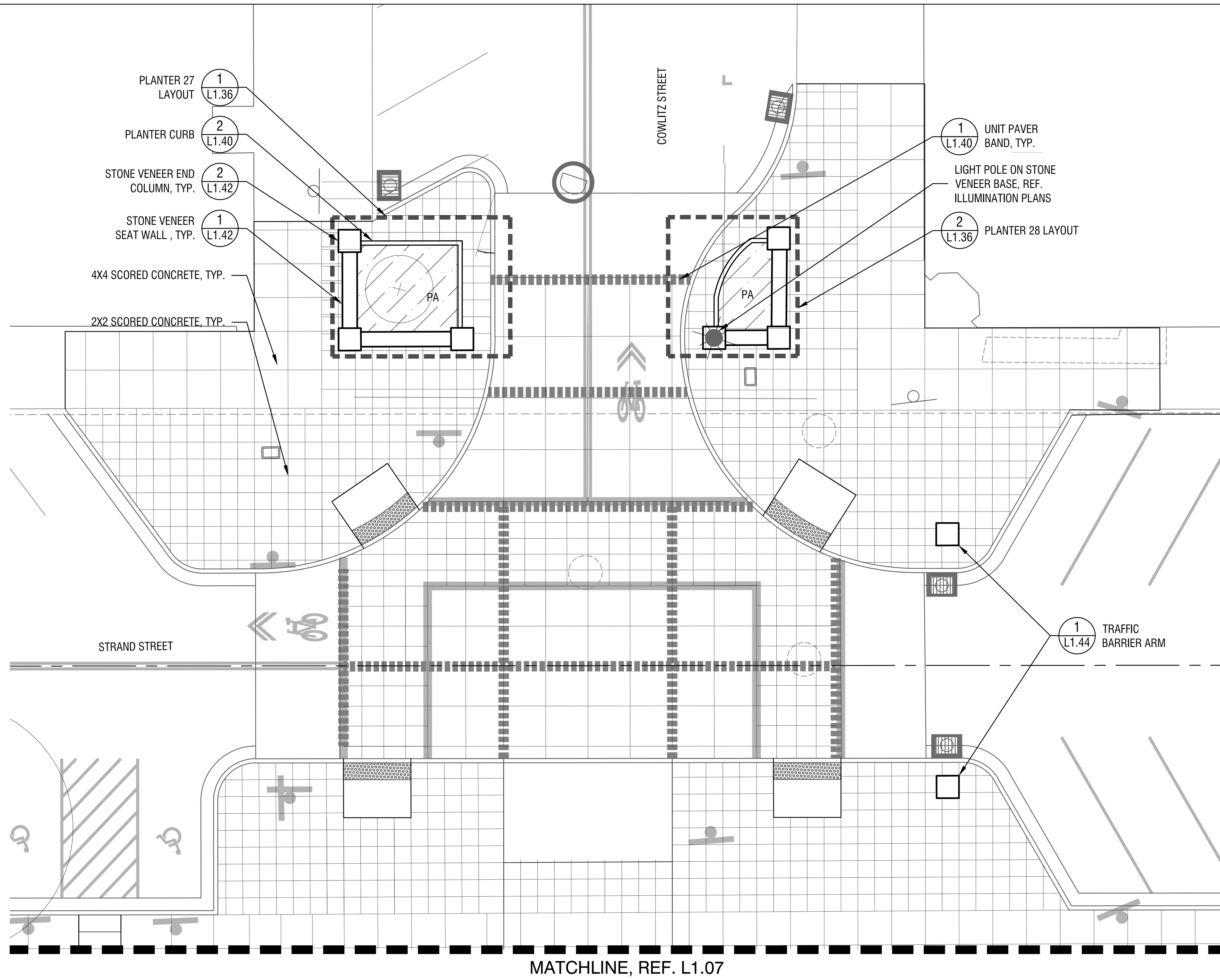

1 **SITE MATERIALS PLAN - STRAND STREET & COWLITZ STREET**
SCALE: 1"= 10'-0"

0 5' 10' 20'

N

GENERAL LEGEND

- ROW LINE
- LIGHT POLE, REF. ELEC.
- BOLLARD
- EXISTING TREE TO REMAIN
- PROPOSED TREE
- BENCH
- WATER FOUNTAIN
- BASALT COLUMN
- BIKE RACK
- PET WASTE BAG DISPENSER
- TRASH CAN
- PAVER BAND
- PLANTING AREA
- SEEDING AREA
- STORMWATER PLANTING

GENERAL NOTES

1. LANDSCAPE DOCUMENTS ARE BASED ON A SURVEY BY OTAK, INC. DATED MARCH 19, 2021. NOTIFY CITY OF ANY DISCREPANCIES IDENTIFIED ON SITE RELATED TO SURVEY INFORMATION PRIOR TO INSTALLATION.
2. REFERENCE CIVIL DRAWINGS FOR STREET AND TRAIL ALIGNMENT AND LAYOUT.
3. REFERENCE ILLUMINATION PLANS FOR LIGHTING.
4. FOR SITE REMOVALS AND TREE PROTECTION REFERENCE DEMOLITION PLANS.
5. IMPROVEMENTS WITHIN THE RIGHT OF WAY AND TRAIL ALIGNMENTS ARE FOR REFERENCE ONLY. REFERENCE CIVIL PLANS.

PRELIMINARY

S. 1ST AND STRAND STREETS ROAD AND UTILITY EXTENSIONS

ST. HELENS, OREGON
SITE MATERIALS PLANS

SITE MATERIALS PLANS
TITLE

#	DATE	DESCRIPTION

REVISIONS

DATUM

MS — DRAWN BY
SVS — CHECKED BY

90% DESIGN
STATUS

JANUARY 10, 2021
DATE

19823
PROJECT NUMBER

L1.06

© 2021 OTAK, INC.

If this drawing is not 22" x 34", it has been reduced/enlarged. Scale accordingly.

Plotted: Jan 07, 2022 - 7:23pm ssimms M:\1 LA PROJECTS\SHS-21014\2_DRAWINGS\1_CAD\4_SHEETS\L100-Site Plans.dwg Layout Name: L1.06

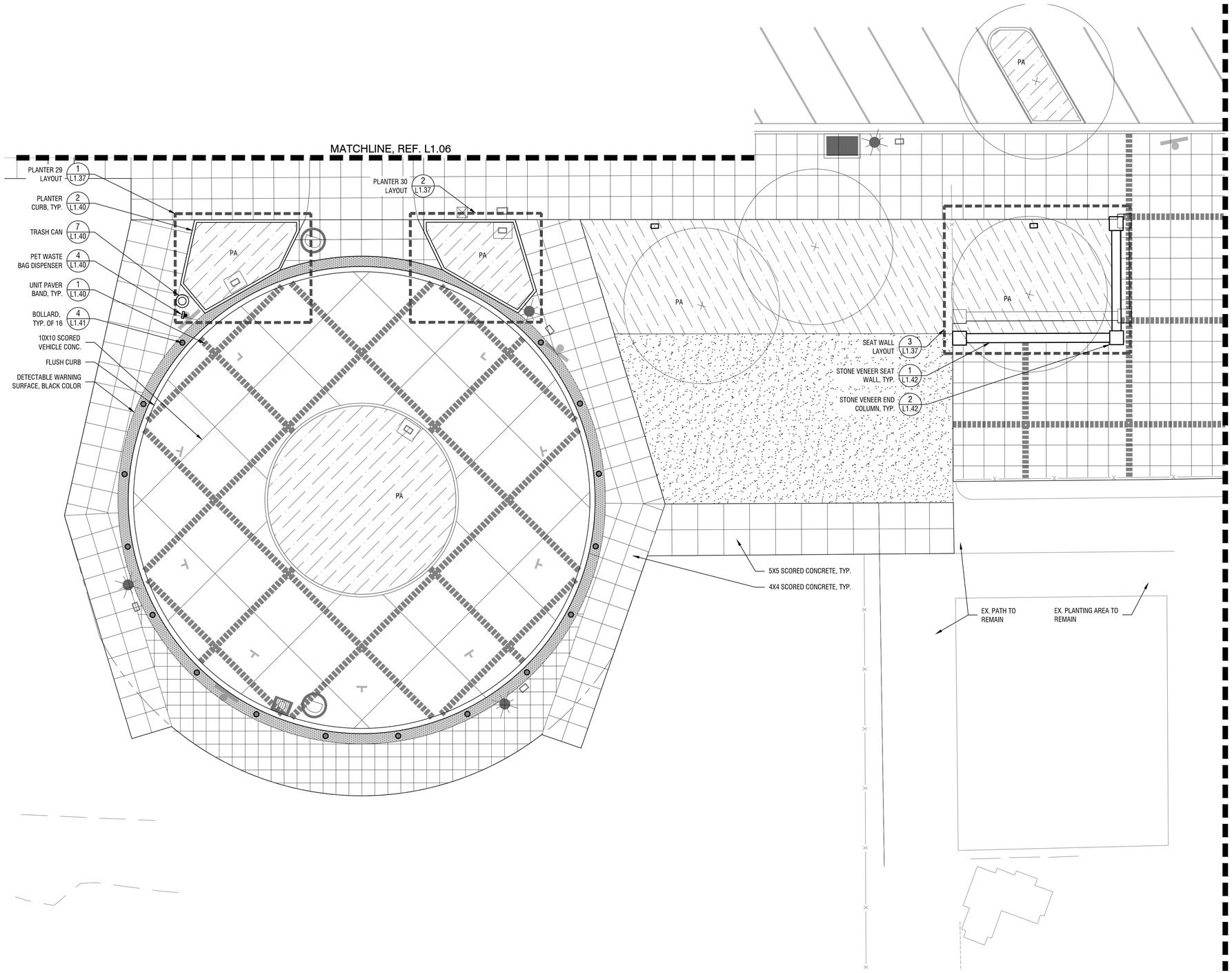

GENERAL LEGEND

- ROW LINE
- LIGHT POLE, REF. ELEC.
- BOLLARD
- EXISTING TREE TO REMAIN
- PROPOSED TREE
- BENCH
- WATER FOUNTAIN
- BASALT COLUMN
- BIKE RACK
- PET WASTE BAG DISPENSER
- TRASH CAN
- PAVER BAND
- PLANTING AREA
- SEEDING AREA
- STORMWATER PLANTING

GENERAL NOTES

1. LANDSCAPE DOCUMENTS ARE BASED ON A SURVEY BY OTAK, INC. DATED MARCH 19, 2021. NOTIFY CITY OF ANY DISCREPANCIES IDENTIFIED ON SITE RELATED TO SURVEY INFORMATION PRIOR TO INSTALLATION.
2. REFERENCE CIVIL DRAWINGS FOR STREET AND TRAIL ALIGNMENT AND LAYOUT.
3. REFERENCE ILLUMINATION PLANS FOR LIGHTING.
4. FOR SITE REMOVALS AND TREE PROTECTION REFERENCE DEMOLITION PLANS.
5. IMPROVEMENTS WITHIN THE RIGHT OF WAY AND TRAIL ALIGNMENTS ARE FOR REFERENCE ONLY. REFERENCE CIVIL PLANS.

1 **SITE MATERIALS PLAN - COWLITZ EXTENSION**
SCALE: 1"= 10'-0"

0 5' 10' 20'

N

City of St. Helens
FOUNDED 1850

PRELIMINARY

S. 1ST AND STRAND STREETS ROAD AND UTILITY EXTENSIONS

ST. HELENS, OREGON
SITE MATERIALS PLANS

SITE MATERIALS PLANS

TITLE

#	DATE	DESCRIPTION

REVISIONS

DATUM

MS — DRAWN BY
SVS — CHECKED BY

90% DESIGN
STATUS

JANUARY 10, 2021
DATE

19823
PROJECT NUMBER

L1.07

© 2021 OTAK, INC.

If this drawing is not 22" x 34", it has been reduced/enlarged. Scale accordingly.

Plotted: Jan 07, 2022 - 7:23pm scimms M:\11\A PROJECTS\HS-210142 DRAWINGS\1 CADd SHEETS\L100-Site Plans.dwg Layout Name: L1.07

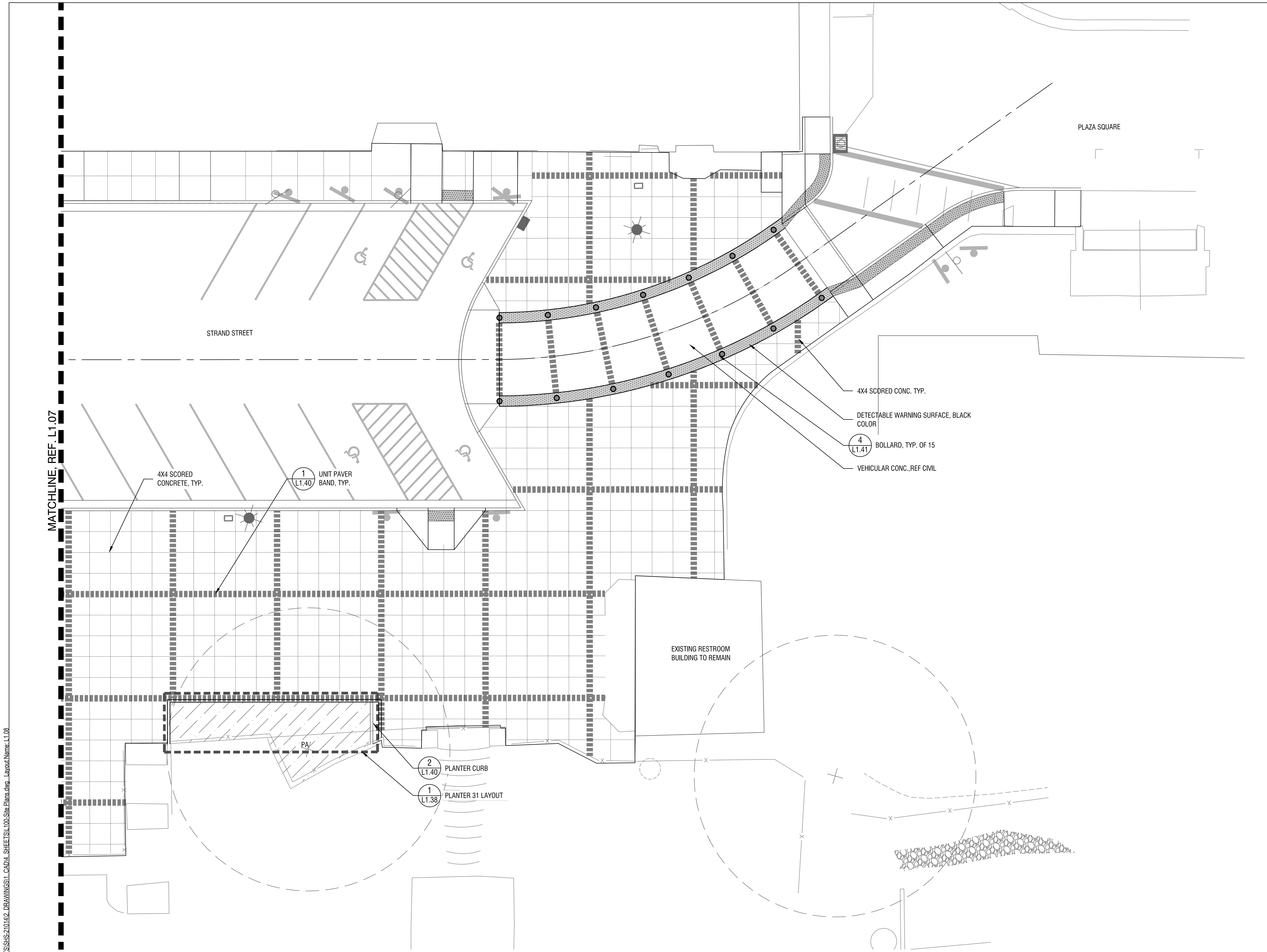

1 **SITE MATERIALS PLAN - STRAND STREET**
SCALE: 1"= 10'-0"

0 5' 10' 20'

N

GENERAL LEGEND

- ROW LINE
- LIGHT POLE, REF. ELEC.
- BOLLARD
- EXISTING TREE TO REMAIN
- PROPOSED TREE
- BENCH
- WATER FOUNTAIN
- BASALT COLUMN
- BIKE RACK
- PET WASTE BAG DISPENSER
- TRASH CAN
- PAVER BAND
- PLANTING AREA
- SEEDING AREA
- STORMWATER PLANTING

GENERAL NOTES

1. LANDSCAPE DOCUMENTS ARE BASED ON A SURVEY BY OTAK, INC. DATED MARCH 19, 2021. NOTIFY CITY OF ANY DISCREPANCIES IDENTIFIED ON SITE RELATED TO SURVEY INFORMATION PRIOR TO INSTALLATION.
2. REFERENCE CIVIL DRAWINGS FOR STREET AND TRAIL ALIGNMENT AND LAYOUT.
3. REFERENCE ILLUMINATION PLANS FOR LIGHTING.
4. FOR SITE REMOVALS AND TREE PROTECTION REFERENCE DEMOLITION PLANS.
5. IMPROVEMENTS WITHIN THE RIGHT OF WAY AND TRAIL ALIGNMENTS ARE FOR REFERENCE ONLY. REFERENCE CIVIL PLANS.

City of St. Helens
FOUNDED 1850

PRELIMINARY

S. 1ST AND STRAND STREETS
ROAD AND UTILITY EXTENSIONS
ST. HELENS, OREGON
SITE MATERIALS PLANS

SITE MATERIALS PLANS

TITLE

#	DATE	DESCRIPTION

REVISIONS

DATUM

MS — SVS
DRAWN BY — CHECKED BY

90% DESIGN
STATUS

JANUARY 10, 2021
DATE

19823
PROJECT NUMBER

L1.08

© 2021 OTAK, INC.

If this drawing is not 22" x 34", it has been reduced/enlarged. Scale accordingly.

Plotted: Jan 07, 2022 - 7:23pm ssimms M:\1 LA PROJECTS\SHS-21014\2. DRAWINGS\1. CAD\4. SHEETS\L100-Site Plans.dwg Layout Name: L1.08

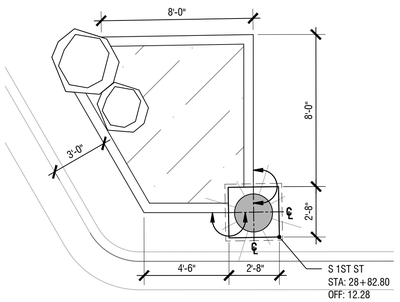

1 **PLANTER 1 LAYOUT - PLAN ENLARGEMENT**
SCALE: 1/4"= 1'-0"

0 2' 4' 8' N

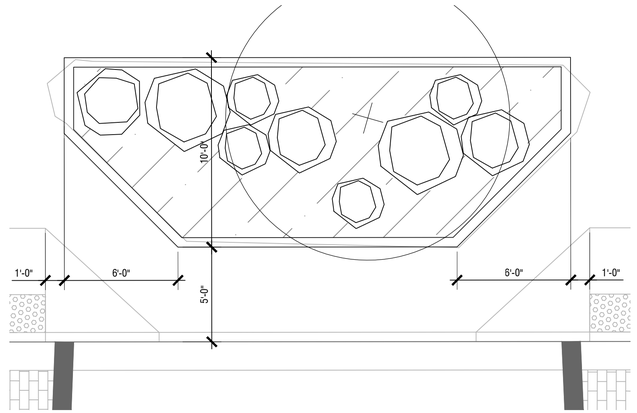

2 **PLANTER 2 LAYOUT - PLAN ENLARGEMENT**
SCALE: 1/4"= 1'-0"

0 2' 4' 8' N

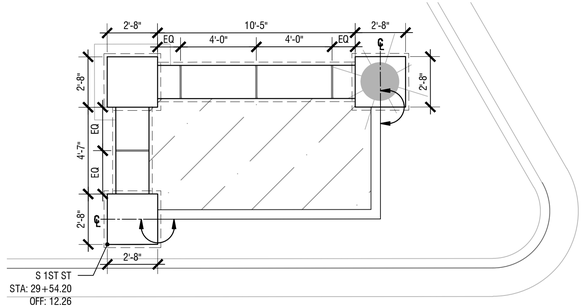

3 **PLANTER 3 LAYOUT - PLAN ENLARGEMENT**
SCALE: 1/4"= 1'-0"

0 2' 4' 8' N

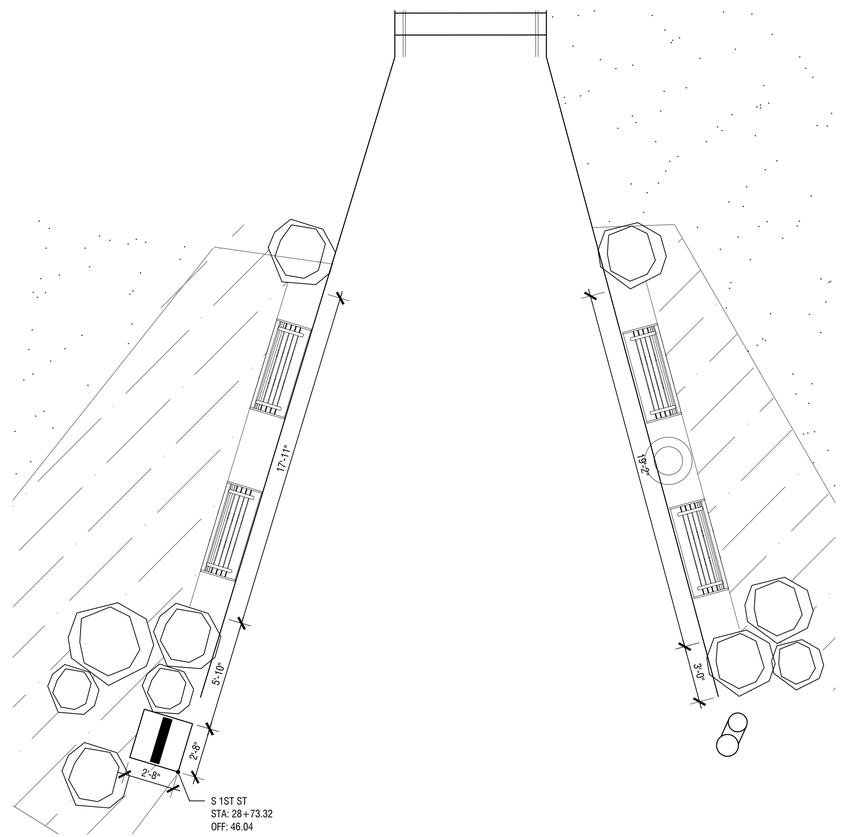

4 **BENCH LAYOUT - PLAN ENLARGEMENT**
SCALE: 1/4"= 1'-0"

0 2' 4' 8' N

LAYOUT NOTES

1. REFERENCE CIVIL PLANS FOR HORIZONTAL LAYOUT OF UTILITIES, TRAILS, AND VEHICULAR AREAS.
2. FACES OF ALL PLANTER CURBS ALIGN WITH CENTERLINE OF END COLUMNS.
3. CENTER OF ALL SEAT WALLS ALIGN WITH CENTER OF ALL END COLUMNS.
4. ALL ANGLES ARE RECTILINEAR UNLESS OTHERWISE LABELED.
5. ALL DIMS ARE FROM FACE OF CURB OR FACE OF WALL. WALL CAPS ARE SHOWN AS DASHED LINES, FOR REFERENCE ONLY.

LAYOUT LEGEND

- CENTER LINE
- ALIGN FACE OF PLANTER CURB WITH CENTERLINE OF END COLUMNS.
- SKATE DETERRENT
- PRECAST CONCRETE CAP (DASHED) FACE OF WALL (SOLID)
- LIGHT POLE ON STONE VENEER BASE, REF. ILLUMINATION
- INTERPRETIVE PANEL ON STONE VENEER BASE, REF. LANDSCAPE DETAILS

City of St. Helens
FOUNDED 1850

PRELIMINARY

S. 1ST AND STRAND STREETS ROAD AND UTILITY EXTENSIONS

ST. HELENS, OREGON
LAYOUT PLANS

SITE LAYOUT PLANS

TITLE

#	DATE	DESCRIPTION

REVISIONS

DATUM

DRAWN BY: MS
CHECKED BY: SVS

STATUS: 90% DESIGN

DATE: JANUARY 10, 2021

PROJECT NUMBER: 19823

L1.32

© 2021 OTAK, INC.

If this drawing is not 22" x 34", it has been reduced/enlarged. Scale accordingly.

Plotted: Jan 07, 2022 - 7:38pm ssimms M:\11\A PROJECTS\HS-210142_DRAWINGS\1_CAD\4_SHEETS\L130-Layout Plans.dwg Layout Name: L1.32

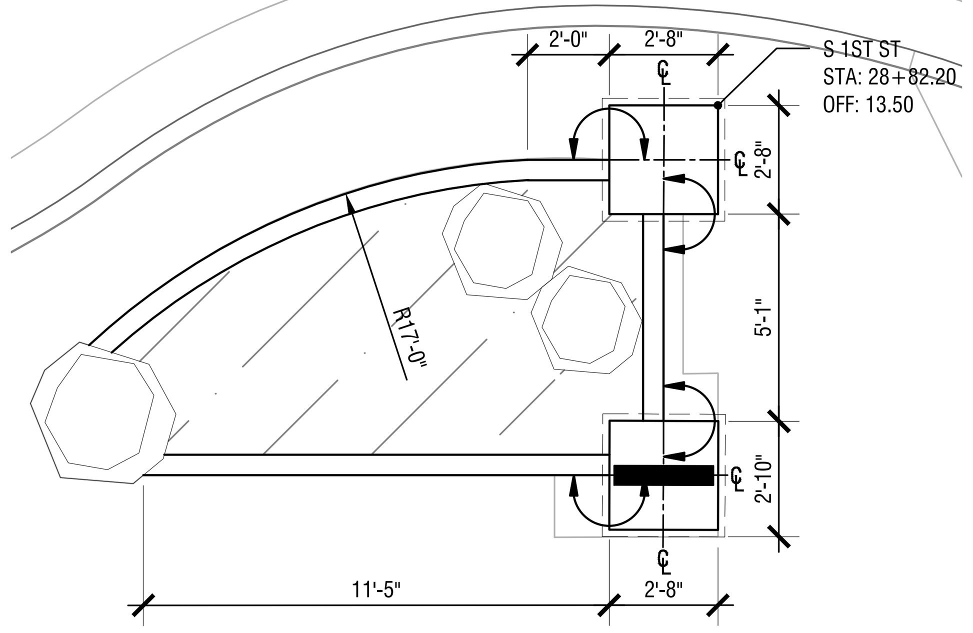

1 **PLANTER 4 LAYOUT - PLAN ENLARGEMENT**
SCALE: 1/4"= 1'-0"
0 2' 4' 8' N

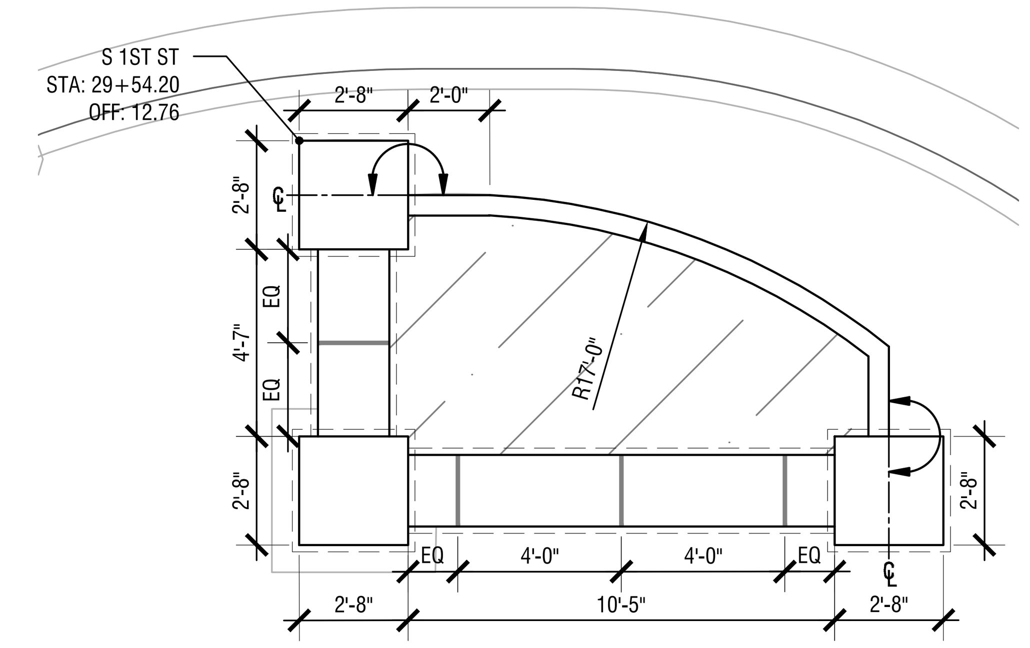

2 **PLANTER 5 LAYOUT - PLAN ENLARGEMENT**
SCALE: 1/4"= 1'-0"
0 2' 4' 8' N

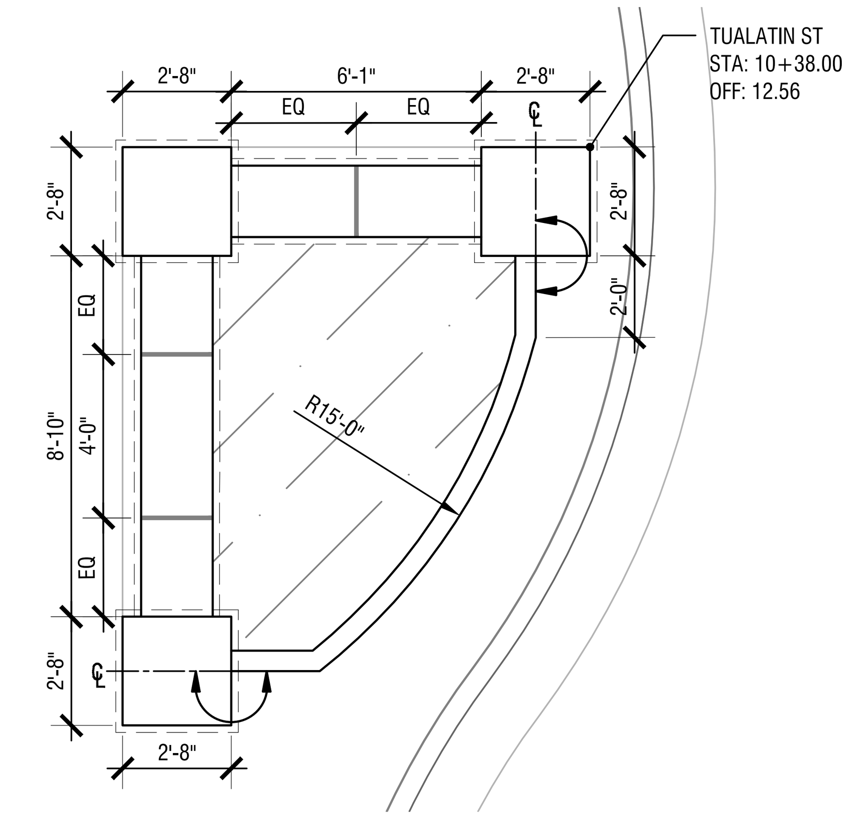

3 **PLANTER 6 LAYOUT - PLAN ENLARGEMENT**
SCALE: 1/4"= 1'-0"
0 2' 4' 8' N

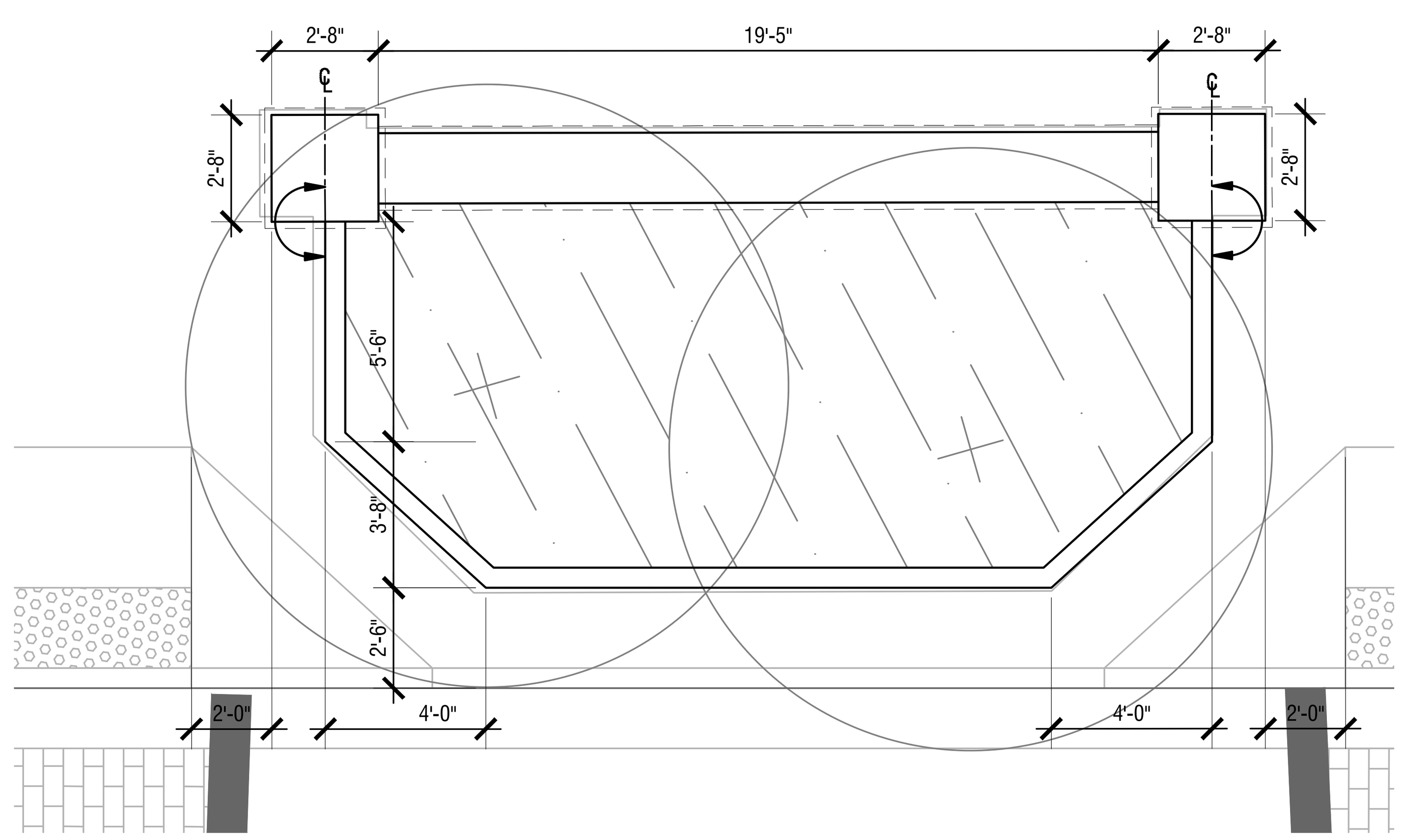

4 **PLANTER 7 LAYOUT - PLAN ENLARGEMENT**
SCALE: 1/4"= 1'-0"
0 2' 4' 8' N

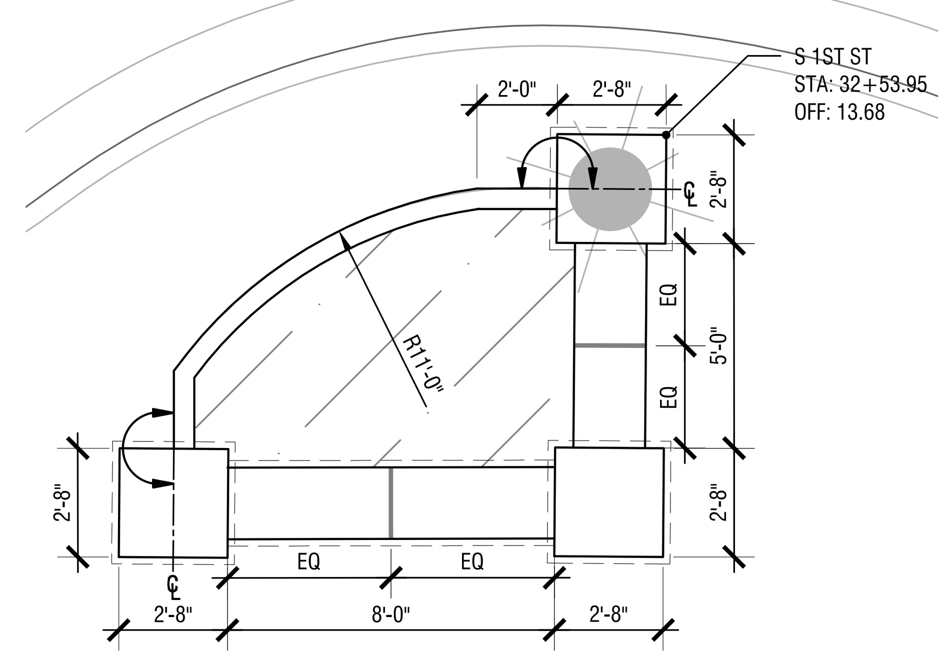

5 **PLANTER 8 LAYOUT - PLAN ENLARGEMENT**
SCALE: 1/4"= 1'-0"
0 2' 4' 8' N

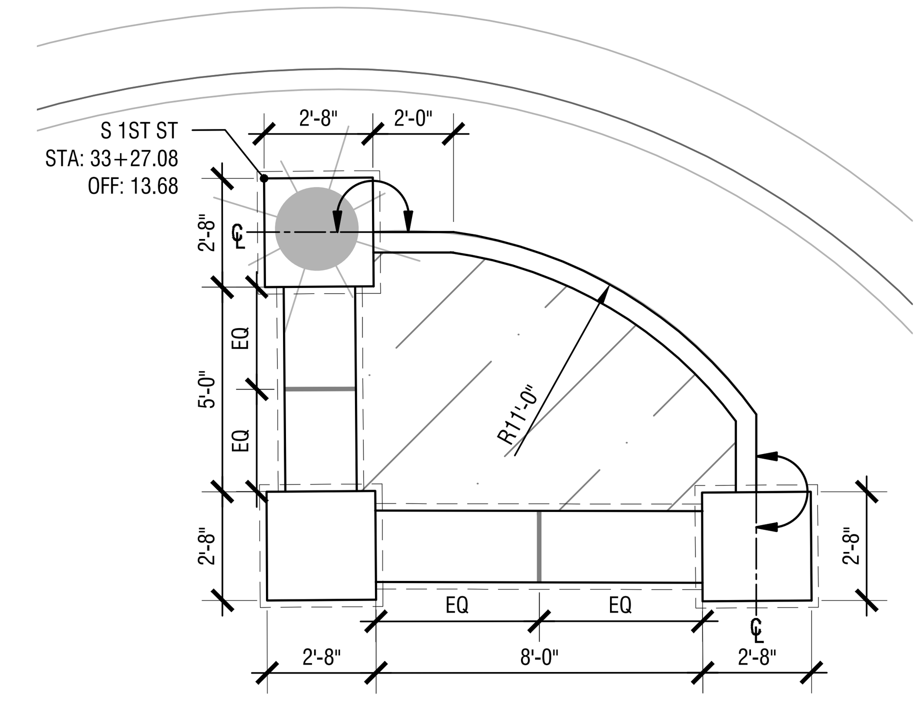

6 **PLANTER 9 LAYOUT - PLAN ENLARGEMENT**
SCALE: 1/4"= 1'-0"
0 2' 4' 8' N

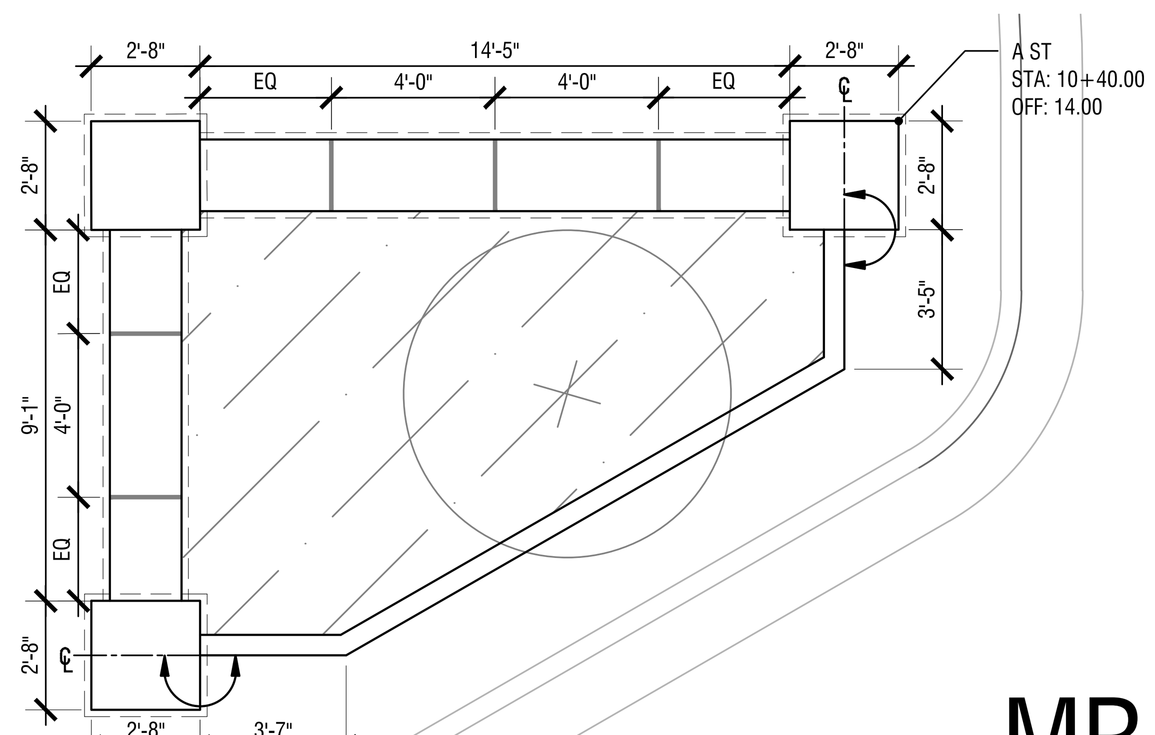

MR

7 **PLANTER 10 LAYOUT - PLAN ENLARGEMENT**
SCALE: 1/4"= 1'-0"
0 2' 4' 8' N

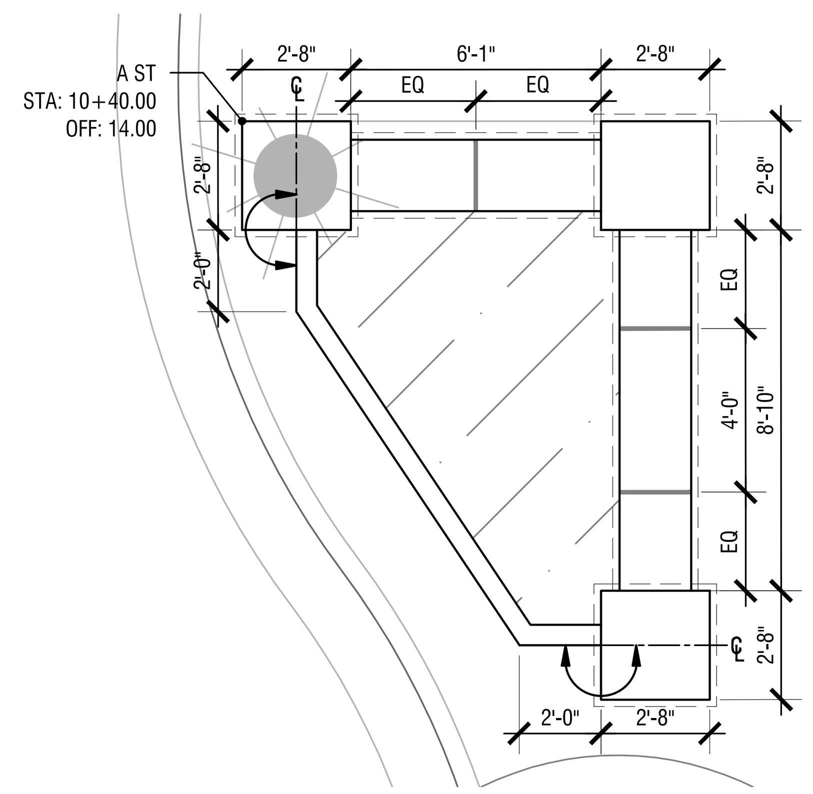

8 **PLANTER 11 LAYOUT - PLAN ENLARGEMENT**
SCALE: 1/4"= 1'-0"
0 2' 4' 8' N

LAYOUT NOTES

1. REFERENCE CIVIL PLANS FOR HORIZONTAL LAYOUT OF UTILITIES, TRAILS, AND VEHICULAR AREAS.
2. FACES OF ALL PLANTER CURBS ALIGN WITH CENTERLINE OF END COLUMNS.
3. CENTER OF ALL SEAT WALLS ALIGN WITH CENTER OF ALL END COLUMNS.
4. ALL ANGLES ARE RECTILINEAR UNLESS OTHERWISE LABELED.
5. ALL DIMS ARE FROM FACE OF CURB OR FACE OF WALL. WALL CAPS ARE SHOWN AS DASHED LINES, FOR REFERENCE ONLY.

LAYOUT LEGEND

- CENTER LINE
- ALIGN FACE OF PLANTER CURB WITH CENTERLINE OF END COLUMNS.
- SKATE DETERRENT
- PRECAST CONCRETE CAP (DASHED) FACE OF WALL (SOLID)
- LIGHT POLE ON STONE VENEER BASE, REF. ILLUMINATION
- INTERPRETIVE PANEL ON STONE VENEER BASE, REF. LANDSCAPE DETAILS

PRELIMINARY

S. 1ST AND STRAND STREETS ROAD AND UTILITY EXTENSIONS

ST. HELENS, OREGON
LAYOUT PLANS

SITE LAYOUT PLANS

TITLE

#	DATE	DESCRIPTION

REVISIONS

DATUM

MS — DRAWN BY
SVS — CHECKED BY

90% DESIGN — STATUS

JANUARY 10, 2021 — DATE

19823 — PROJECT NUMBER

L1.33

© 2021 OTAK, INC.

If this drawing is not 22" x 34", it has been reduced/enlarged. Scale accordingly.

Plotted: Jan 07, 2022 - 7:39pm ssimms M:\1 LA PROJECTS\SHS-21014\2_DRAWINGS\1_CAD\4_SHEETS\L130-Layout Plans.dwg Layout Name: L1.33

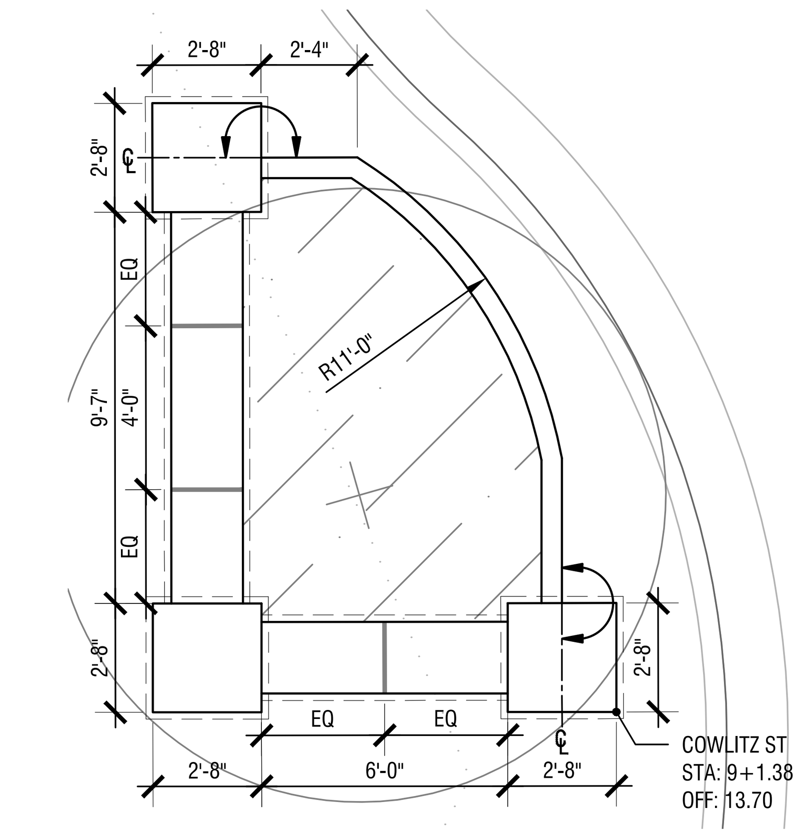

1 PLANTER 12 LAYOUT - PLAN ENLARGEMENT
SCALE: 1/4"= 1'-0"
0 2' 4' 8' N

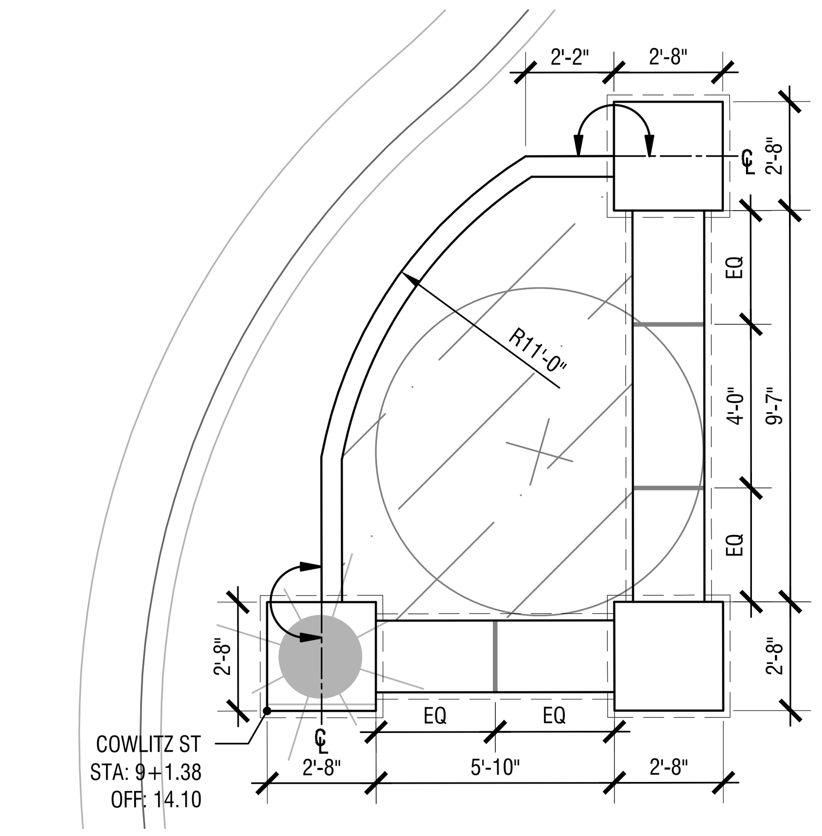

2 PLANTER 13 LAYOUT - PLAN ENLARGEMENT
SCALE: 1/4"= 1'-0"
0 2' 4' 8' N

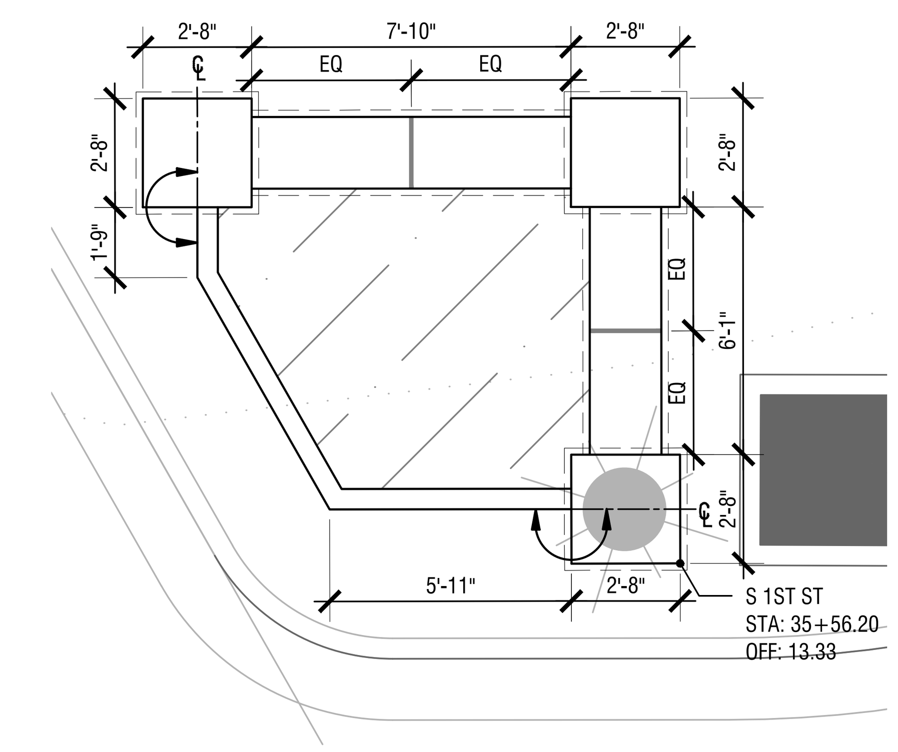

3 PLANTER 14 LAYOUT - PLAN ENLARGEMENT
SCALE: 1/4"= 1'-0"
0 2' 4' 8' N

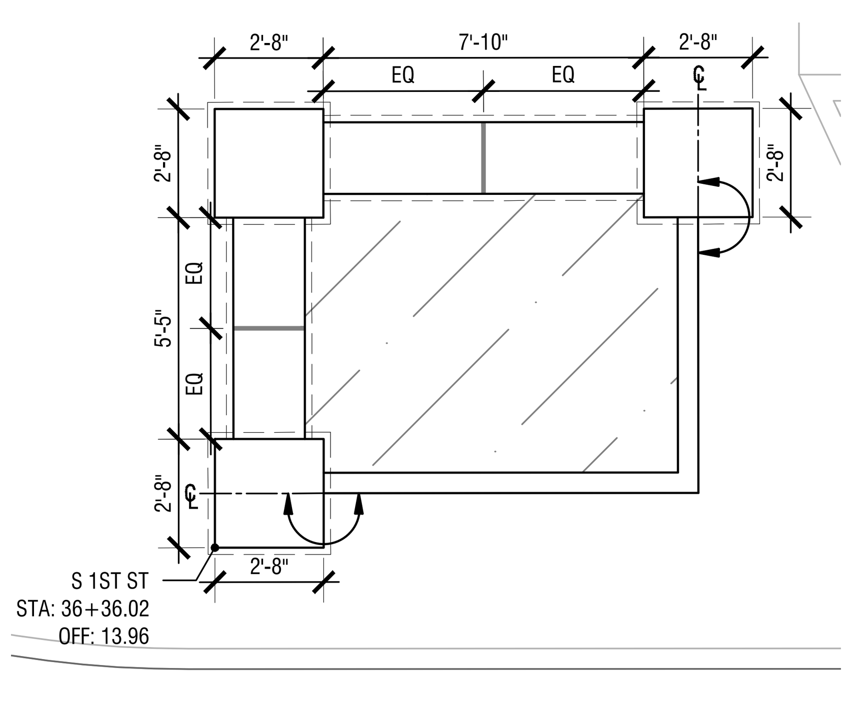

4 PLANTER 15 LAYOUT - PLAN ENLARGEMENT
SCALE: 1/4"= 1'-0"
0 2' 4' 8' N

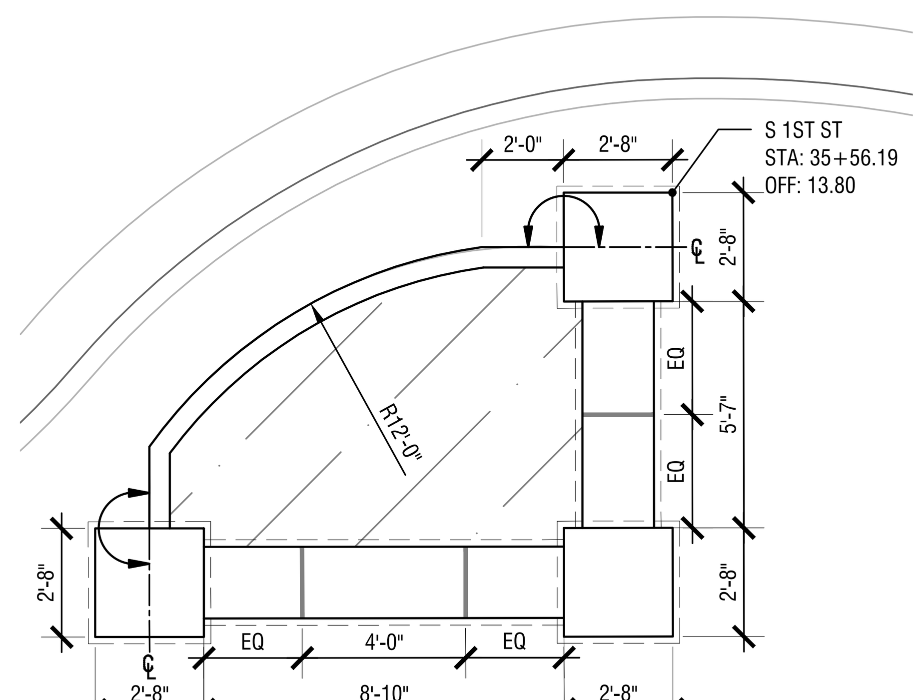

5 PLANTER 16 LAYOUT - PLAN ENLARGEMENT
SCALE: 1/4"= 1'-0"
0 2' 4' 8' N

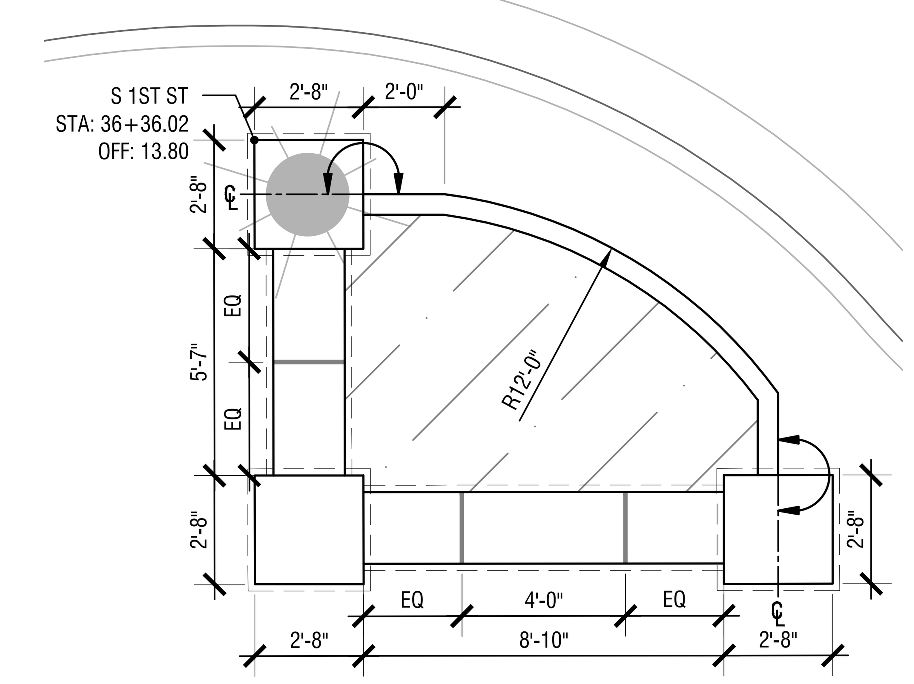

6 PLANTER 17 LAYOUT - PLAN ENLARGEMENT
SCALE: 1/4"= 1'-0"
0 2' 4' 8' N

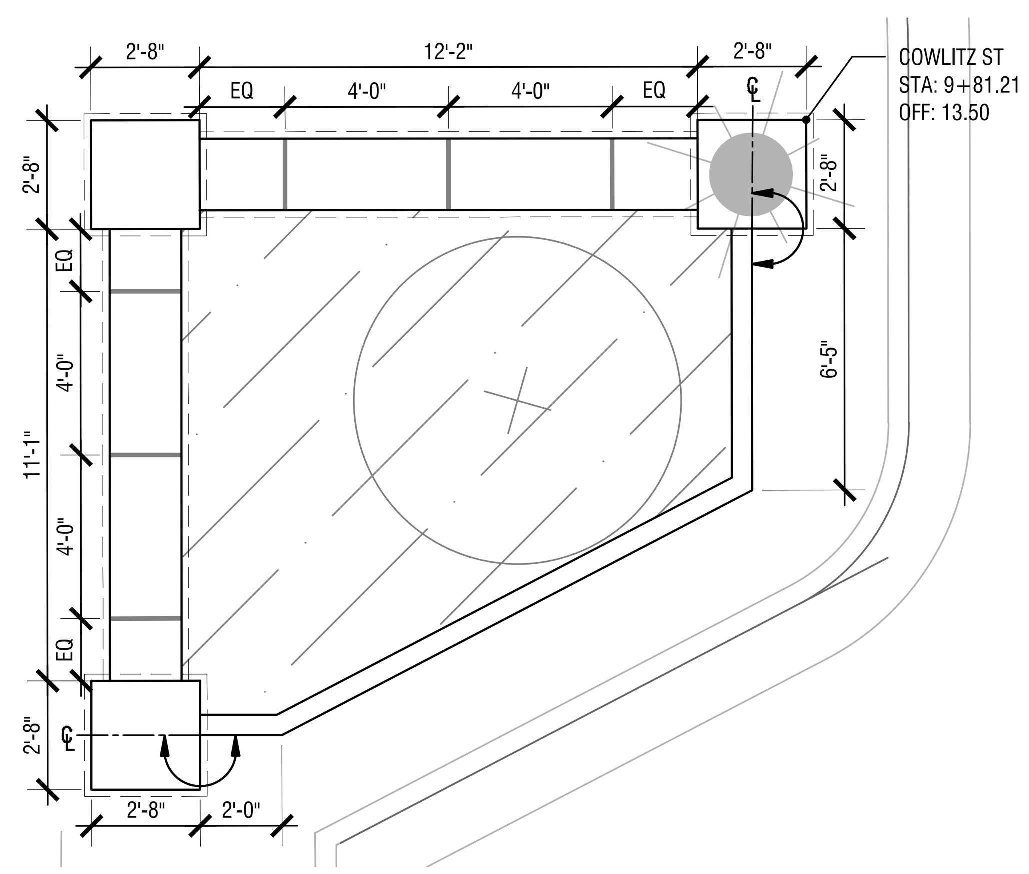

7 PLANTER 18 LAYOUT - PLAN ENLARGEMENT
SCALE: 1/4"= 1'-0"
0 2' 4' 8' N

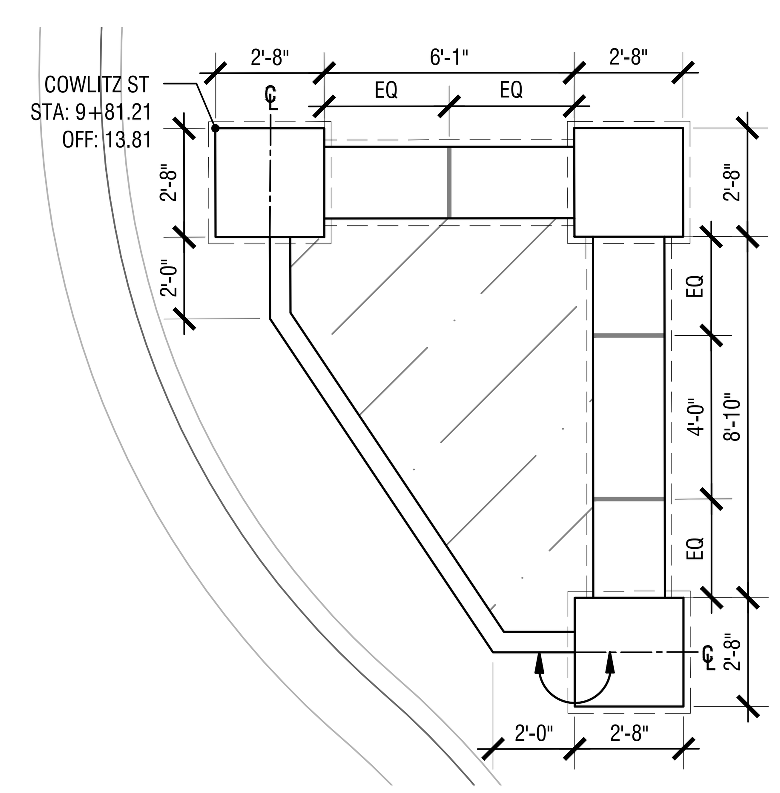

8 PLANTER 19 LAYOUT - PLAN ENLARGEMENT
SCALE: 1/4"= 1'-0"
0 2' 4' 8' N

LAYOUT NOTES

1. REFERENCE CIVIL PLANS FOR HORIZONTAL LAYOUT OF UTILITIES, TRAILS, AND VEHICULAR AREAS.
2. FACES OF ALL PLANTER CURBS ALIGN WITH CENTERLINE OF END COLUMNS.
3. CENTER OF ALL SEAT WALLS ALIGN WITH CENTER OF ALL END COLUMNS.
4. ALL ANGLES ARE RECTILINEAR UNLESS OTHERWISE LABELED.
5. ALL DIMS ARE FROM FACE OF CURB OR FACE OF WALL. WALL CAPS ARE SHOWN AS DASHED LINES, FOR REFERENCE ONLY.

LAYOUT LEGEND

- CENTER LINE
- ALIGN FACE OF PLANTER CURB WITH CENTERLINE OF END COLUMNS.
- SKATE DETERRENT
- PRECAST CONCRETE CAP (DASHED) FACE OF WALL (SOLID)
- LIGHT POLE ON STONE VENEER BASE, REF. ILLUMINATION
- INTERPRETIVE PANEL ON STONE VENEER BASE, REF. LANDSCAPE DETAILS

City of St. Helens
FOUNDED 1850

PRELIMINARY

S. 1ST AND STRAND STREETS ROAD AND UTILITY EXTENSIONS

ST. HELENS, OREGON
LAYOUT PLANS

SITE LAYOUT PLANS

TITLE

#	DATE	DESCRIPTION

REVISIONS

DATUM

MS — DRAWN BY
SVS — CHECKED BY

90% DESIGN — STATUS

JANUARY 10, 2021 — DATE

19823 — PROJECT NUMBER

L1.34

© 2021 OTAK, INC.

If this drawing is not 22" x 34", it has been reduced/enlarged. Scale accordingly.

Plotted: Jan 07, 2022 - 7:40pm ssimms M:\1 LA PROJECTS\SHS-21014\2_DRAWINGS\1_CAD\4_SHEETS\L1.30-Layout Plans.dwg Layout Name: L1.34

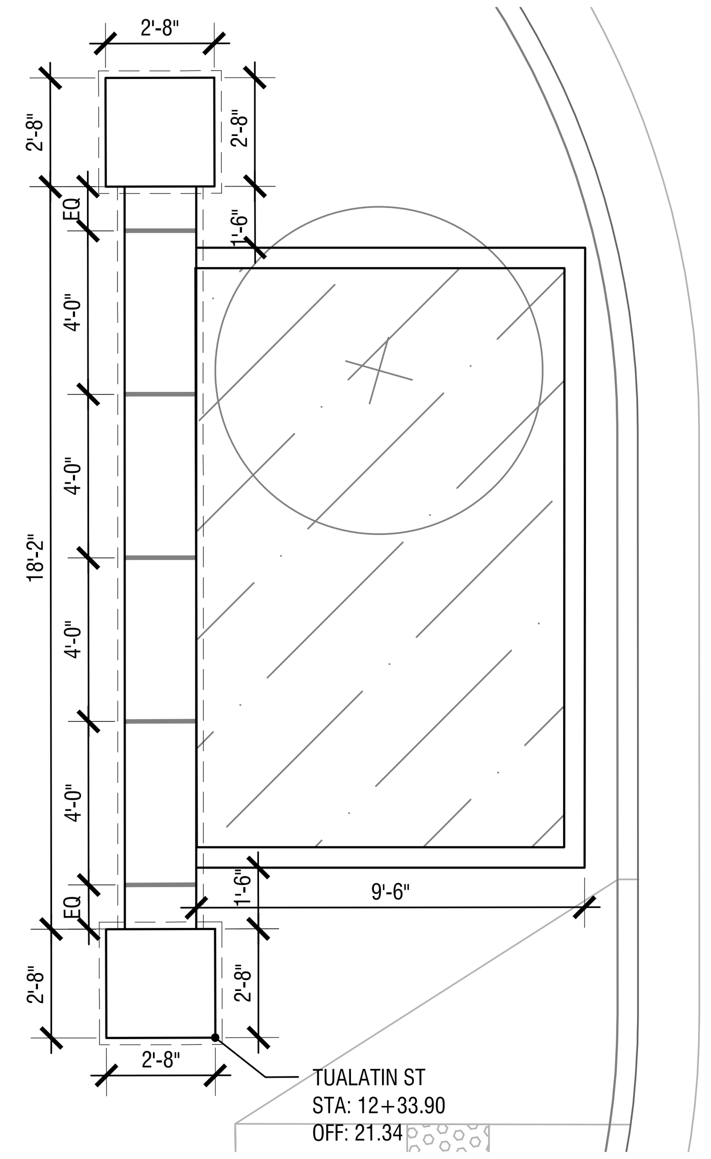

1 **PLANTER 20 LAYOUT - PLAN ENLARGEMENT**
SCALE: 1/4"= 1'-0"
0 2' 4' 8' N

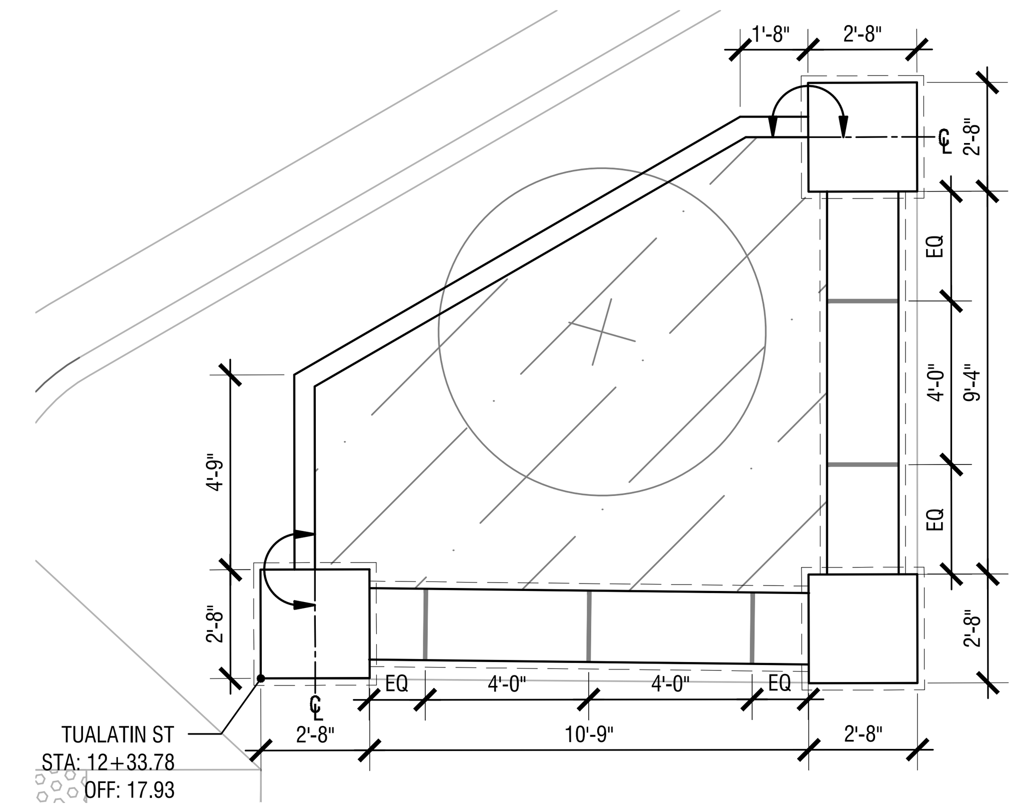

2 **PLANTER 21 LAYOUT - PLAN ENLARGEMENT**
SCALE: 1/4"= 1'-0"
0 2' 4' 8' N

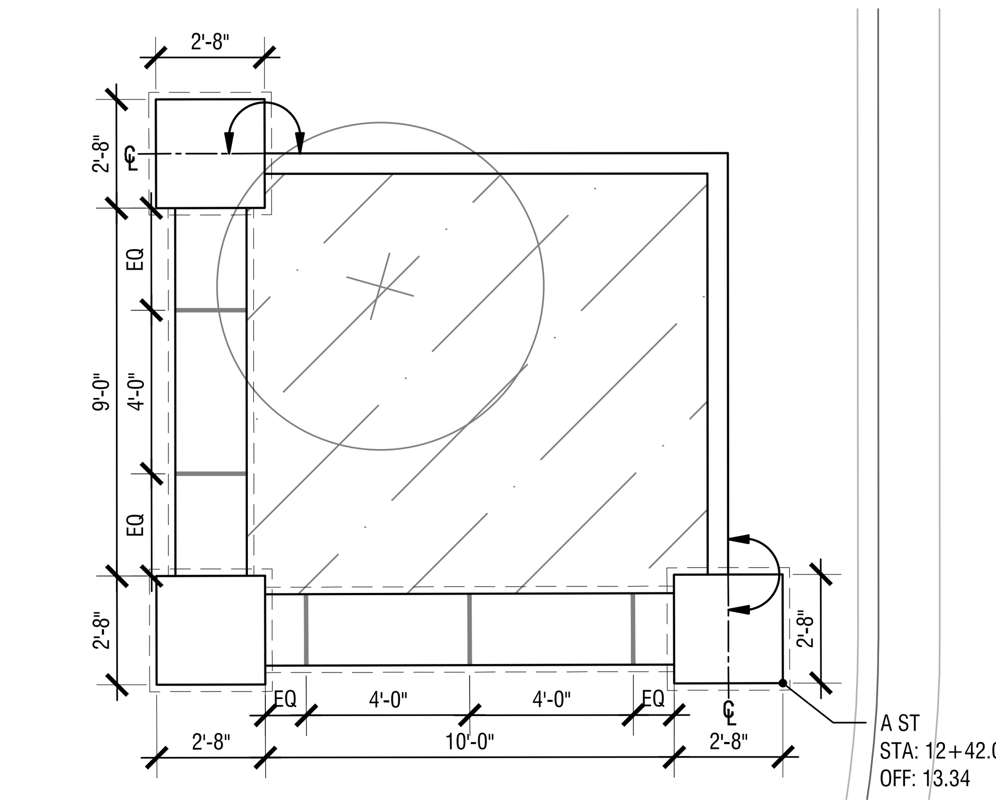

3 **PLANTER 22 LAYOUT - PLAN ENLARGEMENT**
SCALE: 1/4"= 1'-0"
0 2' 4' 8' N

LAYOUT NOTES

1. REFERENCE CIVIL PLANS FOR HORIZONTAL LAYOUT OF UTILITIES, TRAILS, AND VEHICULAR AREAS.
2. FACES OF ALL PLANTER CURBS ALIGN WITH CENTERLINE OF END COLUMNS.
3. CENTER OF ALL SEAT WALLS ALIGN WITH CENTER OF ALL END COLUMNS.
4. ALL ANGLES ARE RECTILINEAR UNLESS OTHERWISE LABELED.
5. ALL DIMS ARE FROM FACE OF CURB OR FACE OF WALL. WALL CAPS ARE SHOWN AS DASHED LINES, FOR REFERENCE ONLY.

LAYOUT LEGEND

- CENTER LINE
- ALIGN FACE OF PLANTER CURB WITH CENTERLINE OF END COLUMNS.
- SKATE DETERRENT
- PRECAST CONCRETE CAP (DASHED) / FACE OF WALL (SOLID)
- LIGHT POLE ON STONE VENEER BASE, REF. ILLUMINATION
- INTERPRETIVE PANEL ON STONE VENEER BASE, REF. LANDSCAPE DETAILS

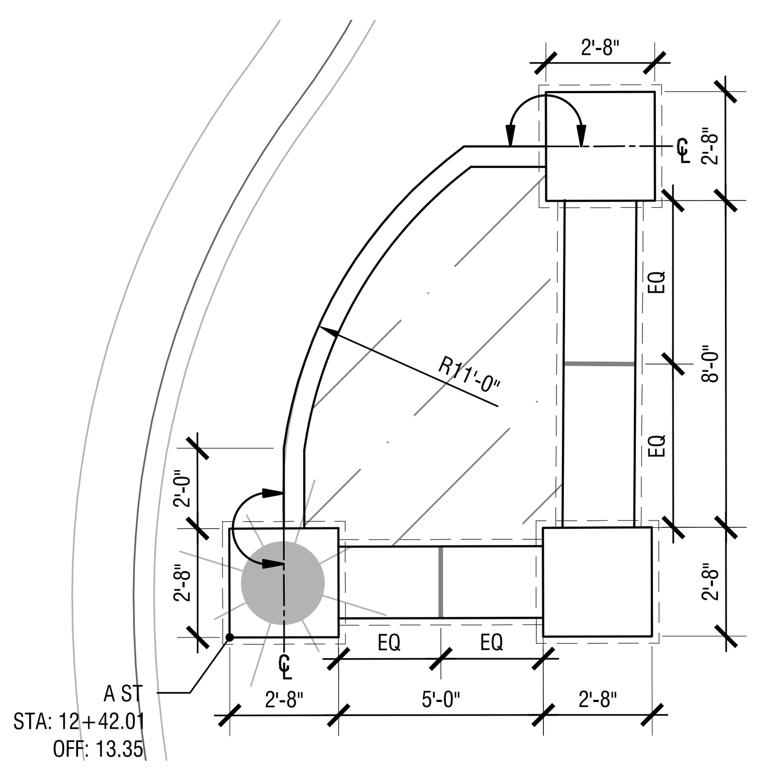

4 **PLANTER 23 LAYOUT - PLAN ENLARGEMENT**
SCALE: 1/4"= 1'-0"
0 2' 4' 8' N

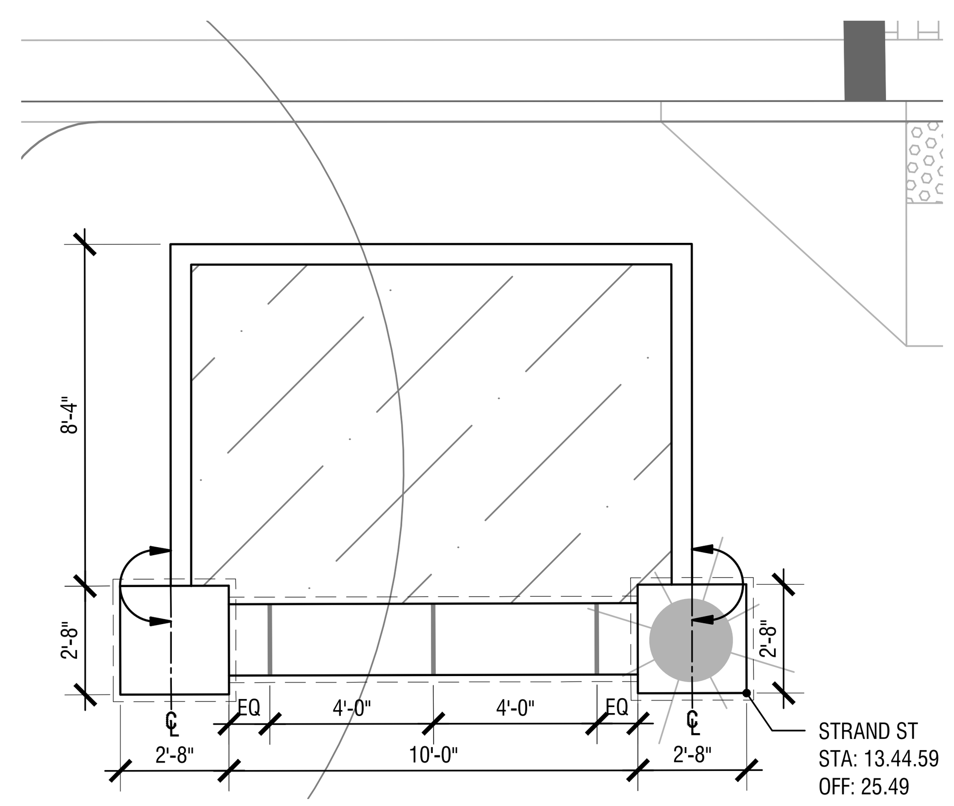

5 **PLANTER 24 LAYOUT - PLAN ENLARGEMENT**
SCALE: 1/4"= 1'-0"
0 2' 4' 8' N

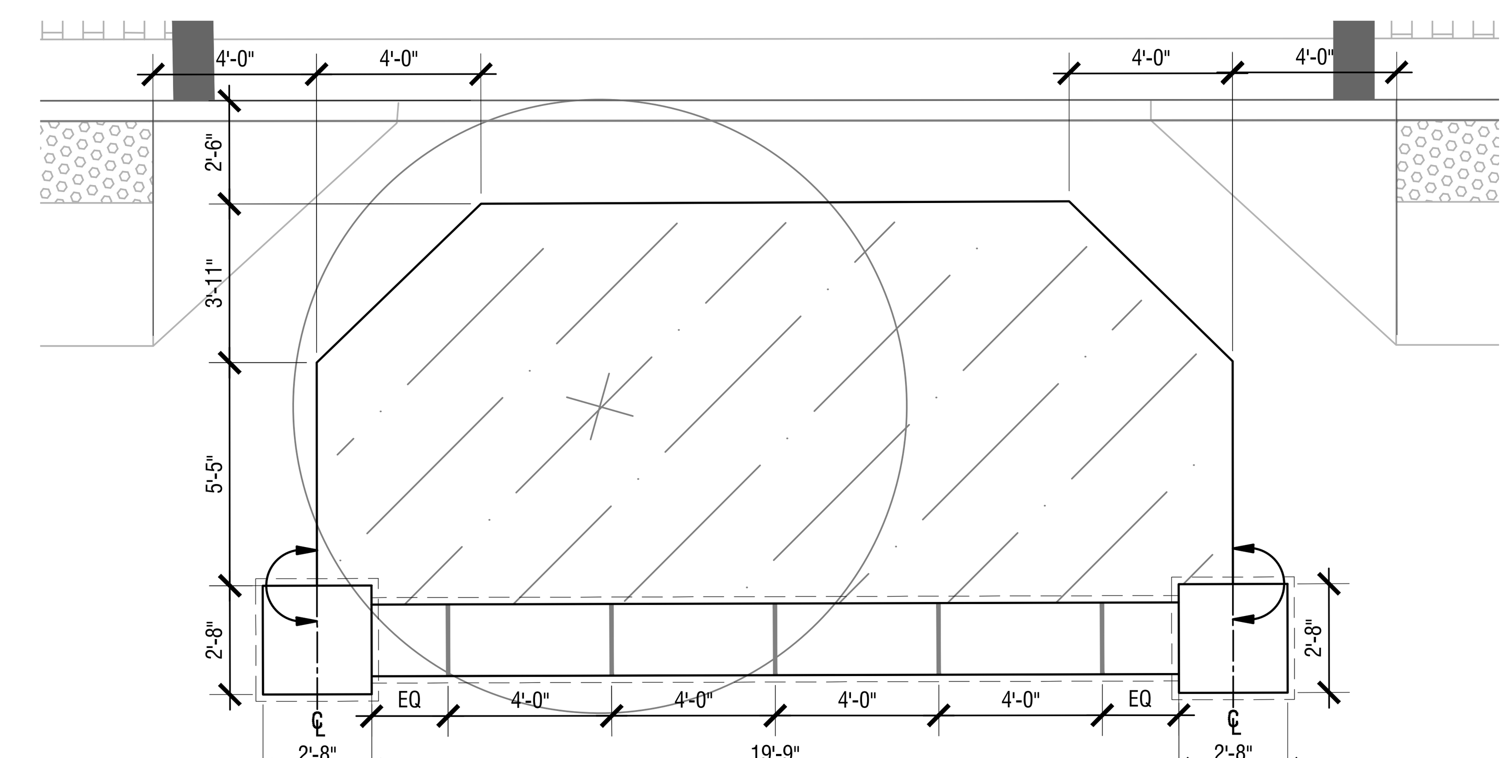

6 **PLANTER 25 LAYOUT - PLAN ENLARGEMENT**
SCALE: 1/4"= 1'-0"
0 2' 4' 8' N

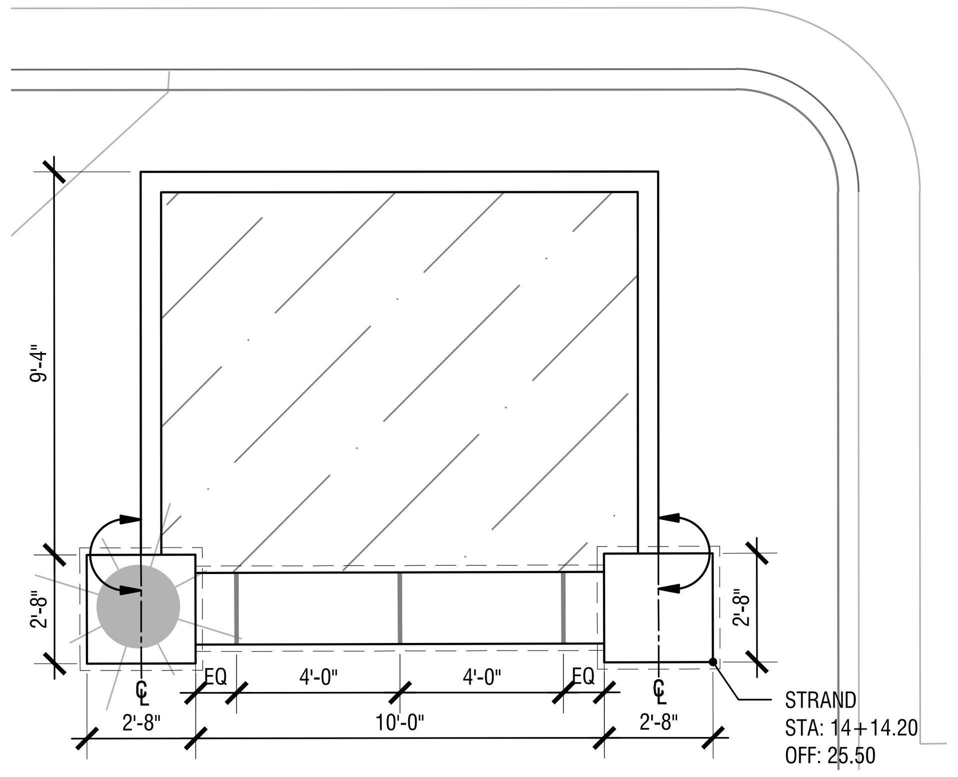

7 **PLANTER 26 LAYOUT - PLAN ENLARGEMENT**
SCALE: 1/4"= 1'-0"
0 2' 4' 8' N

PRELIMINARY

S. 1ST AND STRAND STREETS ROAD AND UTILITY EXTENSIONS
ST. HELENS, OREGON
LAYOUT PLANS

SITE LAYOUT PLANS

TITLE

#	DATE	DESCRIPTION

REVISIONS

DATUM

MS — DRAWN BY
SVS — CHECKED BY

90% DESIGN
STATUS

JANUARY 10, 2021
DATE

19823
PROJECT NUMBER

L1.35

© 2021 OTAK, INC.

If this drawing is not 22" x 34", it has been reduced/enlarged. Scale accordingly.

Plotted: Jan 07, 2022 - 7:40pm ssimms M:\1 LA PROJECTS\SHS-21014\2_DRAWINGS\1_CAD\4_SHEETS\L130-Layout Plans.dwg Layout Name: L1.35

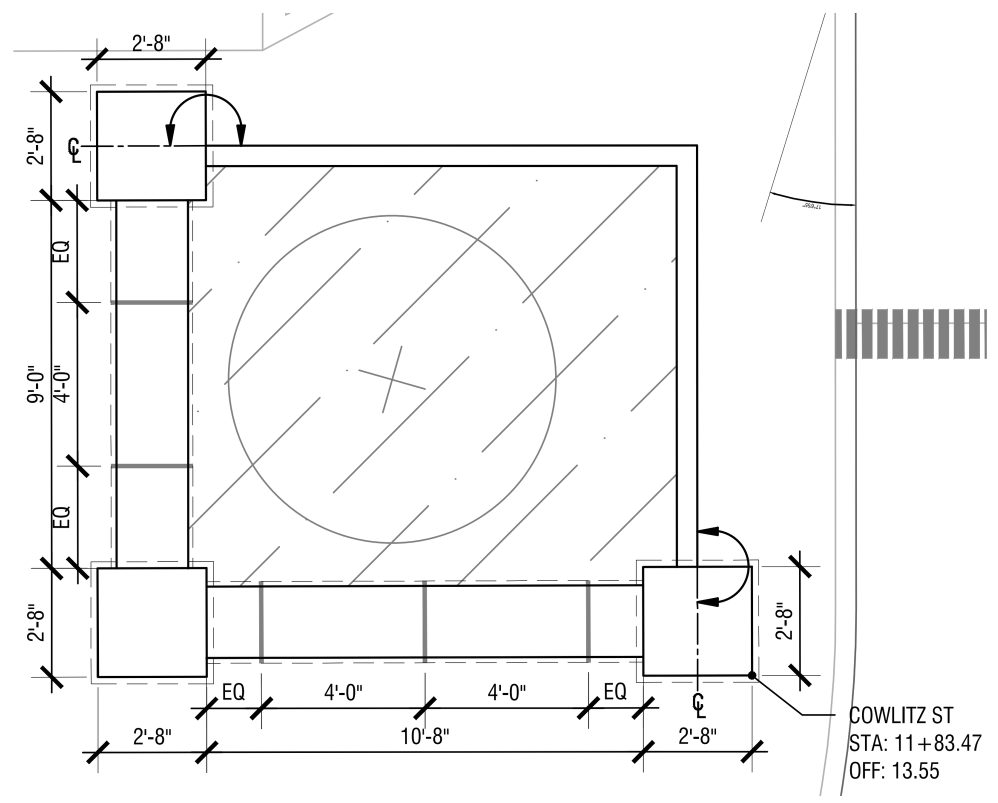

1 **PLANTER 27 LAYOUT - PLAN ENLARGEMENT**
SCALE: 1/4"= 1'-0"

0 2' 4' 8' N

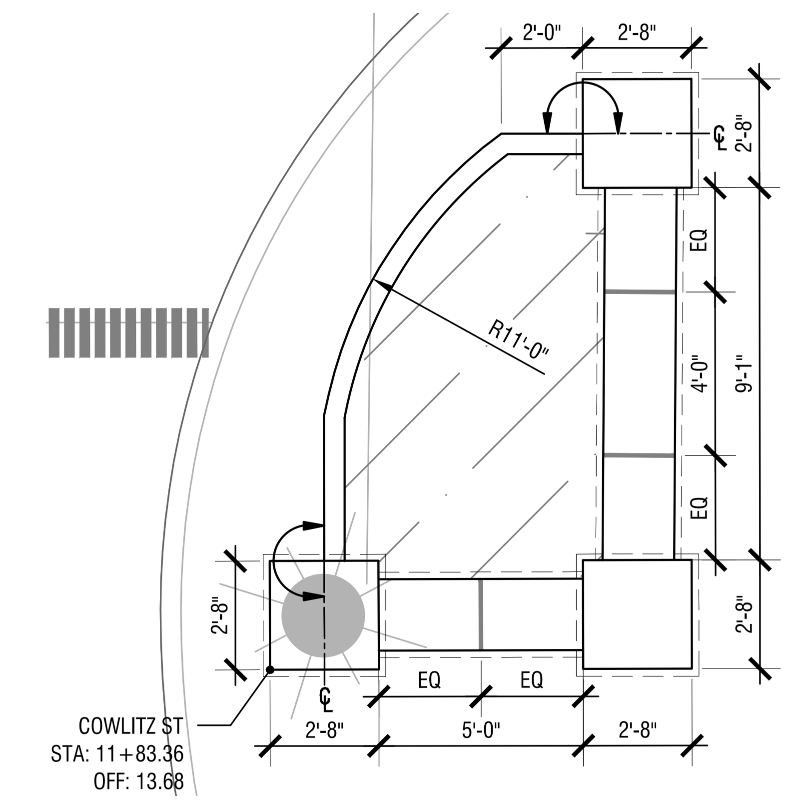

2 **PLANTER 28 LAYOUT - PLAN ENLARGEMENT**
SCALE: 1/4"= 1'-0"

0 2' 4' 8' N

LAYOUT NOTES

1. REFERENCE CIVIL PLANS FOR HORIZONTAL LAYOUT OF UTILITIES, TRAILS, AND VEHICULAR AREAS.
2. FACES OF ALL PLANTER CURBS ALIGN WITH CENTERLINE OF END COLUMNS.
3. CENTER OF ALL SEAT WALLS ALIGN WITH CENTER OF ALL END COLUMNS.
4. ALL ANGLES ARE RECTILINEAR UNLESS OTHERWISE LABELED.
5. ALL DIMS ARE FROM FACE OF CURB OR FACE OF WALL. WALL CAPS ARE SHOWN AS DASHED LINES, FOR REFERENCE ONLY.

LAYOUT LEGEND

- CENTER LINE
- ALIGN FACE OF PLANTER CURB WITH CENTERLINE OF END COLUMNS.
- SKATE DETERRENT
- PRECAST CONCRETE CAP (DASHED) FACE OF WALL (SOLID)
- LIGHT POLE ON STONE VENEER BASE, REF. ILLUMINATION
- INTERPRETIVE PANEL ON STONE VENEER BASE, REF. LANDSCAPE DETAILS

PRELIMINARY

S. 1ST AND STRAND STREETS ROAD AND UTILITY EXTENSIONS

ST. HELENS, OREGON
LAYOUT PLANS

SITE LAYOUT PLANS

TITLE

#	DATE	DESCRIPTION

REVISIONS

DATUM

MS — DRAWN BY
SVS — CHECKED BY

90% DESIGN — STATUS

JANUARY 10, 2021 — DATE

19823 — PROJECT NUMBER

L1.36

© 2021 OTAK, INC.

If this drawing is not 22" x 34", it has been reduced/enlarged. Scale accordingly.

Plotted: Jan 07, 2022 - 7:41pm ssimms M:\1 LA PROJECTS\SHS-210142_DRAWINGS\1_CAD\4_SHEETS\L130-Layout Plans.dwg Layout Name: L1.36

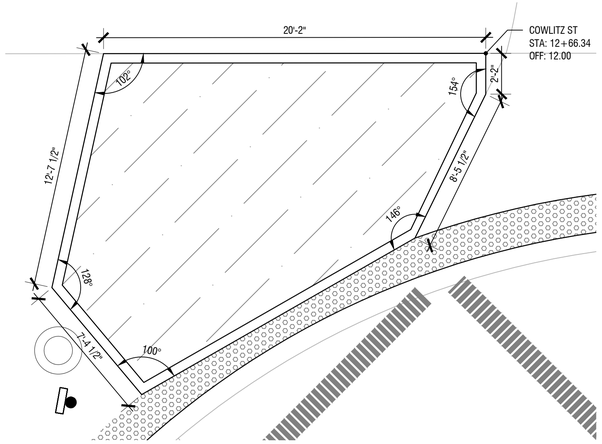

1 **PLANTER 29 LAYOUT - PLAN ENLARGEMENT**
SCALE: 1/4"= 1'-0"

0 2' 4' 8'

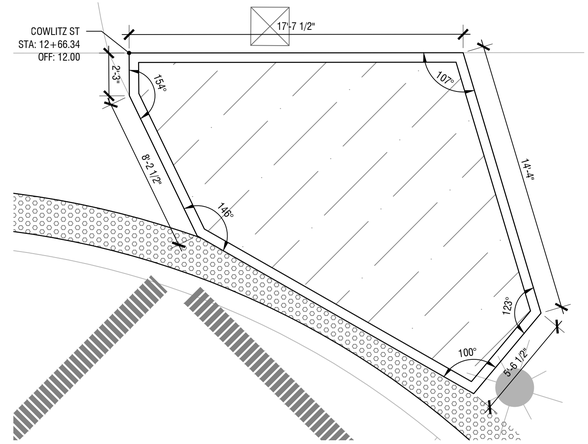

2 **PLANTER 30 LAYOUT - PLAN ENLARGEMENT**
SCALE: 1/4"= 1'-0"

0 2' 4' 8'

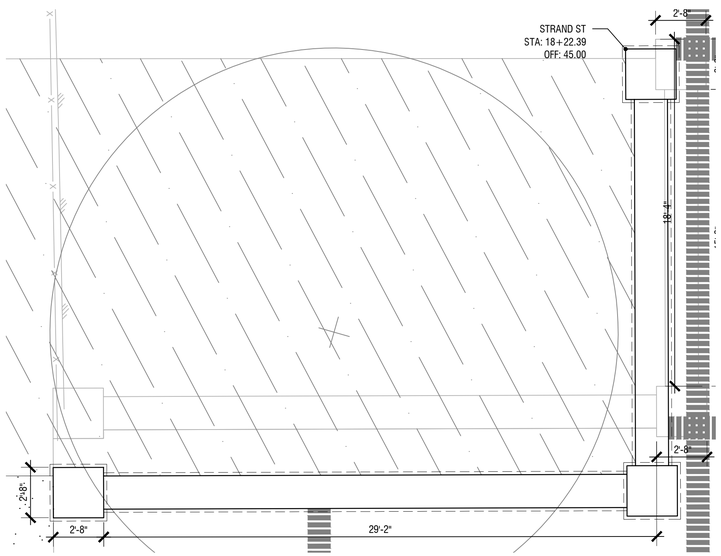

3 **SEAT WALL LAYOUT - PLAN ENLARGEMENT**
SCALE: 1/4"= 1'-0"

0 2' 4' 8'

LAYOUT NOTES

1. REFERENCE CIVIL PLANS FOR HORIZONTAL LAYOUT OF UTILITIES, TRAILS, AND VEHICULAR AREAS.
2. FACES OF ALL PLANTER CURBS ALIGN WITH CENTERLINE OF END COLUMNS.
3. CENTER OF ALL SEAT WALLS ALIGN WITH CENTER OF ALL END COLUMNS.
4. ALL ANGLES ARE RECTILINEAR UNLESS OTHERWISE LABELED.
5. ALL DIMS ARE FROM FACE OF CURB OR FACE OF WALL. WALL CAPS ARE SHOWN AS DASHED LINES, FOR REFERENCE ONLY.

LAYOUT LEGEND

- CENTER LINE
- ALIGN FACE OF PLANTER CURB WITH CENTERLINE OF END COLUMNS.
- SKATE DETERRENT
- PRECAST CONCRETE CAP (DASHED) FACE OF WALL (SOLID)
- LIGHT POLE ON STONE VENEER BASE, REF. ILLUMINATION
- INTERPRETIVE PANEL ON STONE VENEER BASE, REF. LANDSCAPE DETAILS

City of St. Helens
FOUNDED 1850

PRELIMINARY

S. 1ST AND STRAND STREETS
ROAD AND UTILITY EXTENSIONS
ST. HELENS, OREGON
LAYOUT PLANS

SITE LAYOUT PLANS

TITLE

#	DATE	DESCRIPTION

REVISIONS

DATUM

MS — DRAWN BY
SVS — CHECKED BY

90% DESIGN
STATUS

JANUARY 10, 2021
DATE

19823
PROJECT NUMBER

L1.37

© 2021 OTAK, INC.

If this drawing is not 22" x 34", it has been reduced/enlarged. Scale accordingly.

Plotted: Jan 07, 2022 - 7:41pm ssimms M:\11\A.PROJECTS\SHS-210142_DRAWINGS\1_CAD\4_SHEETS\L130-Layout Plans.dwg Layout Name: L1.37

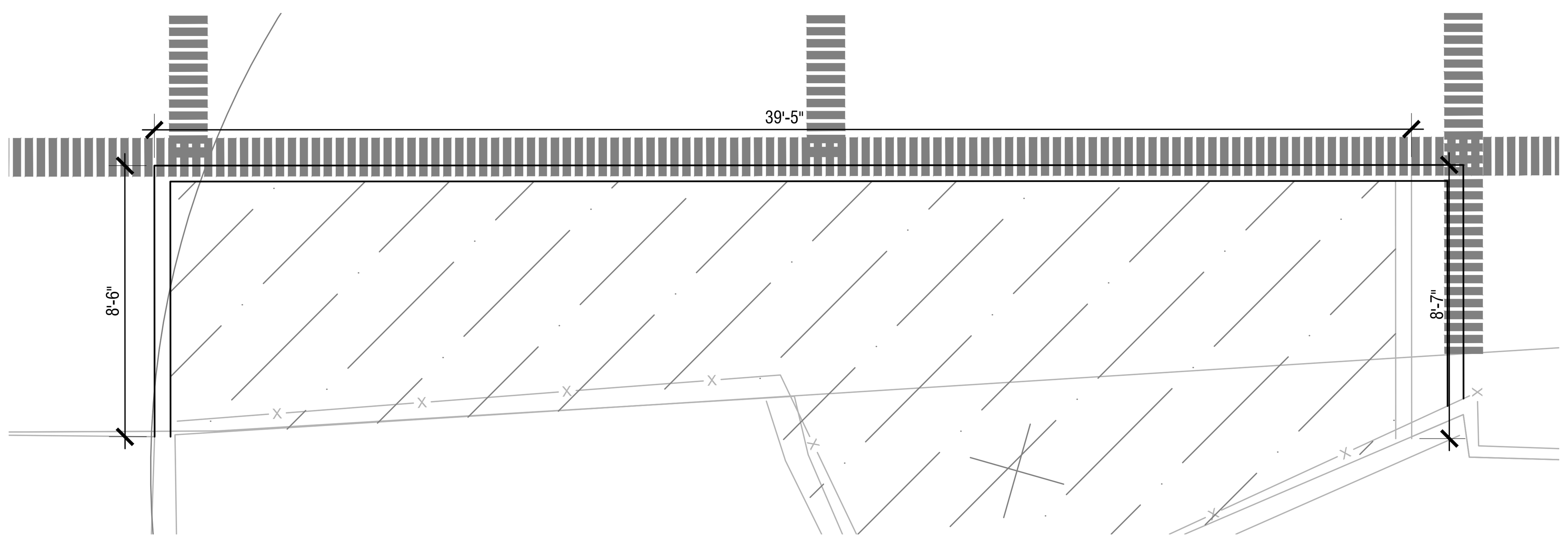

1 **PLANTER 31 LAYOUT - PLAN ENLARGEMENT**
SCALE: 1/4"= 1'-0"

0 2' 4' 8'

N

LAYOUT NOTES

1. REFERENCE CIVIL PLANS FOR HORIZONTAL LAYOUT OF UTILITIES, TRAILS, AND VEHICULAR AREAS.
2. FACES OF ALL PLANTER CURBS ALIGN WITH CENTERLINE OF END COLUMNS.
3. CENTER OF ALL SEAT WALLS ALIGN WITH CENTER OF ALL END COLUMNS.
4. ALL ANGLES ARE RECTILINEAR UNLESS OTHERWISE LABELED.
5. ALL DIMS ARE FROM FACE OF CURB OR FACE OF WALL. WALL CAPS ARE SHOWN AS DASHED LINES, FOR REFERENCE ONLY.

LAYOUT LEGEND

- CENTER LINE
- ALIGN FACE OF PLANTER CURB WITH CENTERLINE OF END COLUMNS.
- SKATE DETERRENT
- PRECAST CONCRETE CAP (DASHED) FACE OF WALL (SOLID)
- LIGHT POLE ON STONE VENEER BASE, REF. ILLUMINATION
- INTERPRETIVE PANEL ON STONE VENEER BASE, REF. LANDSCAPE DETAILS

PRELIMINARY

S. 1ST AND STRAND STREETS ROAD AND UTILITY EXTENSIONS
ST. HELENS, OREGON
LAYOUT PLANS

SITE LAYOUT PLANS

TITLE

#	DATE	DESCRIPTION

REVISIONS

DATUM

MS — DRAWN BY
SVS — CHECKED BY

90% DESIGN — STATUS

JANUARY 10, 2021 — DATE

19823 — PROJECT NUMBER

L1.38

© 2021 OTAK, INC.

If this drawing is not 22" x 34", it has been reduced/enlarged. Scale accordingly.

Plotted: Jan 07, 2022 - 7:41pm ssimms M:\1 LA PROJECTS\SHS-21014\2_DRAWINGS\1_CAD\4_SHEETS\L130-Layout Plans.dwg Layout Name: L1.38

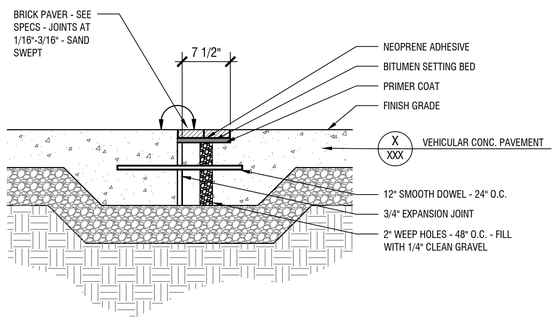

1 PAVER BAND @ CONC PAVING - SECTION
SCALE: 1"= 1'-0"
Pwy-conc-tiliwalg.DWG

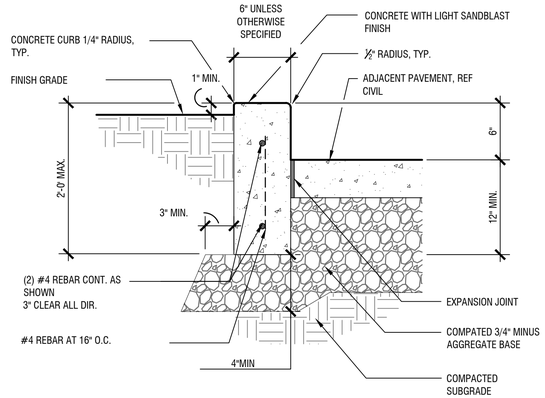

2 PLANTER CURB - SECTION
SCALE: 1 1/2"= 1'-0"
L140-SITE DETAILS.DWG

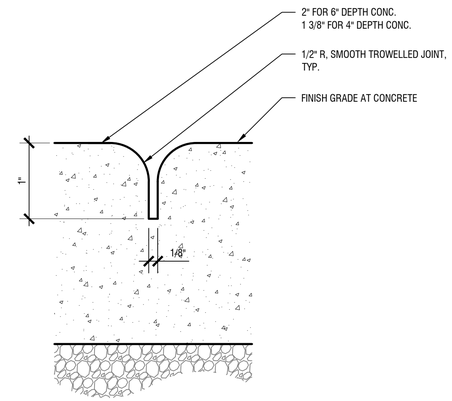

3 SECTION - STANDARD CONTROL JOINT
SCALE: 1"= 0'-1"
L140-SITE DETAILS.DWG

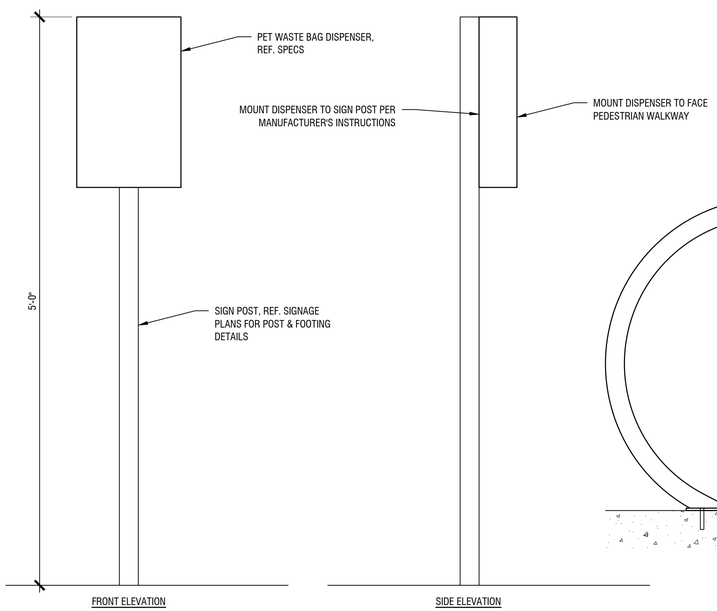

4 PET WASTE BAG DISPENSER - ELEVATIONS
SCALE: 1 1/2"= 1'-0"

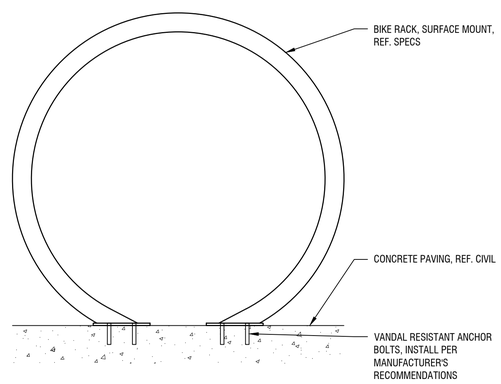

5 BIKE RACK - SECTION
SCALE: 1 1/2"= 1'-0"

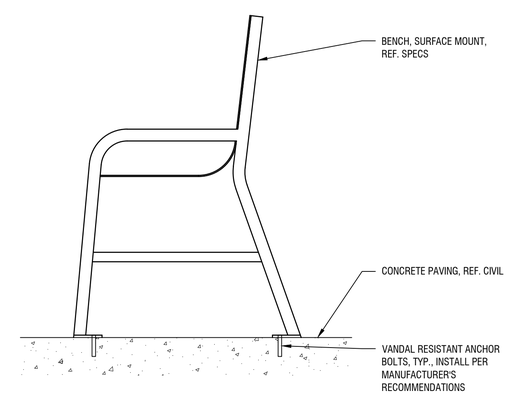

6 BENCH - SECTION
SCALE: 1 1/2"= 1'-0"

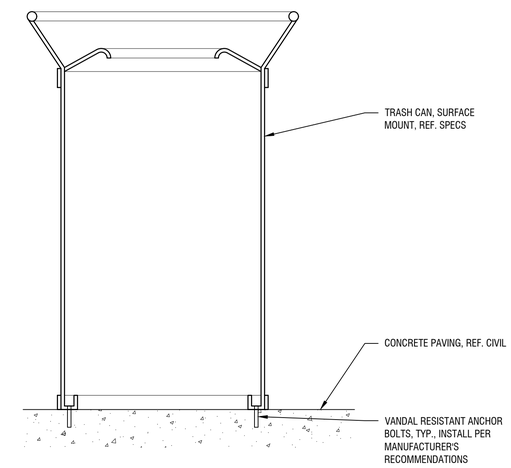

7 TRASH CAN - SECTION
SCALE: 1 1/2"= 1'-0"

PRELIMINARY

Mayer/Reed
Mayer/Reed, Inc.
319 SW Washington St.
Suite 820
Portland, Oregon 97204
503.223.5953

S. 1ST AND STRAND STREETS ROAD AND UTILITY EXTENSIONS

ST. HELENS, OREGON
SITE MATERIALS PLANS

SITE DETAILS

TITLE

#	DATE	DESCRIPTION

REVISIONS

DATUM

MS — DRAWN BY
SVS — CHECKED BY

90% DESIGN
STATUS

JANUARY 10, 2021
DATE

19823
PROJECT NUMBER

L1.40

© 2021 OTAK, INC.

If this drawing is not 22" x 34", it has been reduced/enlarged. Scale accordingly.

Plotted: Jan 07, 2022 - 5:53pm mscherer M:\LA PROJECTS\HS-210142_DRAWINGS\1_CAD\4_SHEETS\L140-Site Details.dwg Layout Name: L1.40

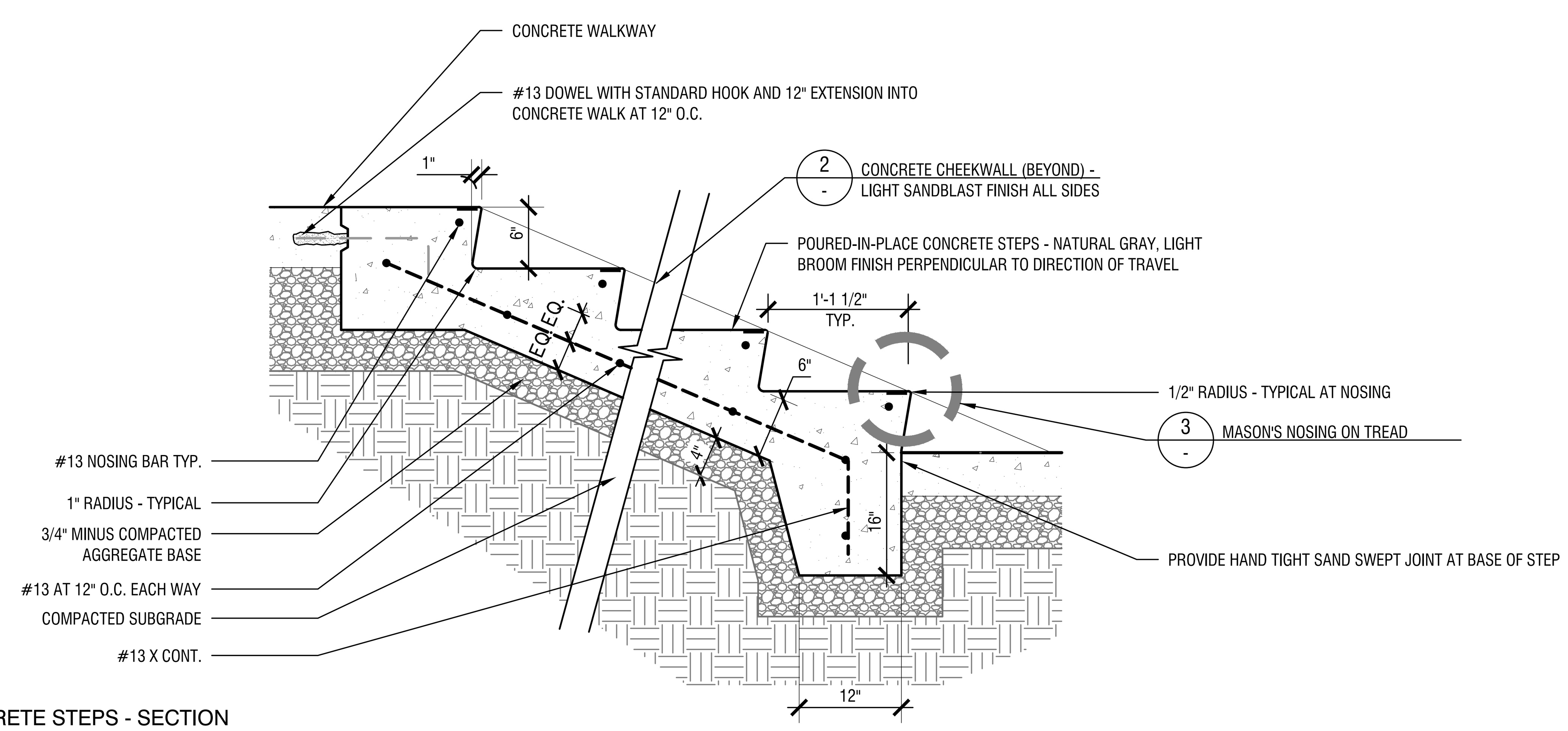

1 CONCRETE STEPS - SECTION
SCALE: 1" = 1'-0"
L140-SITE DETAILS.DWG

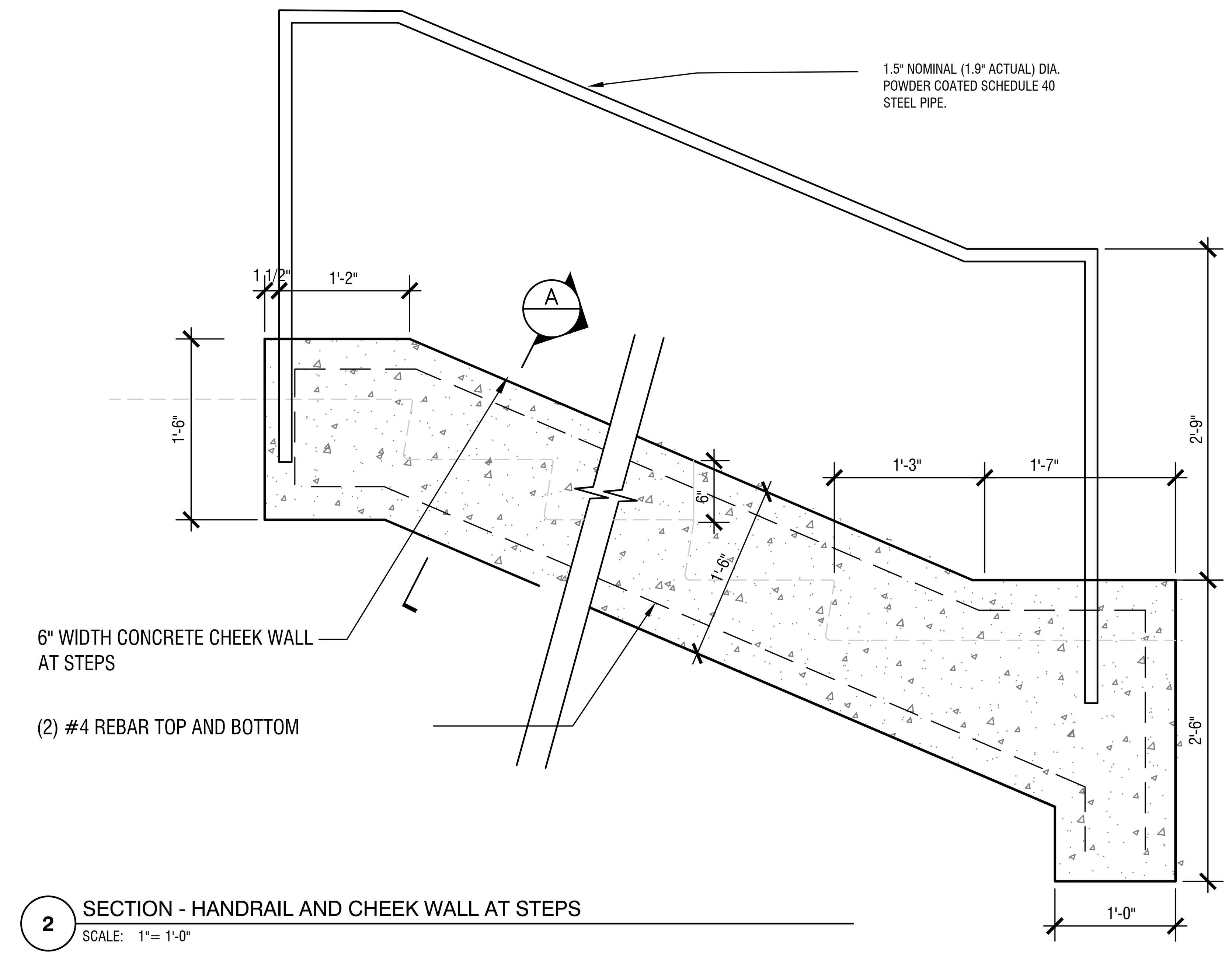

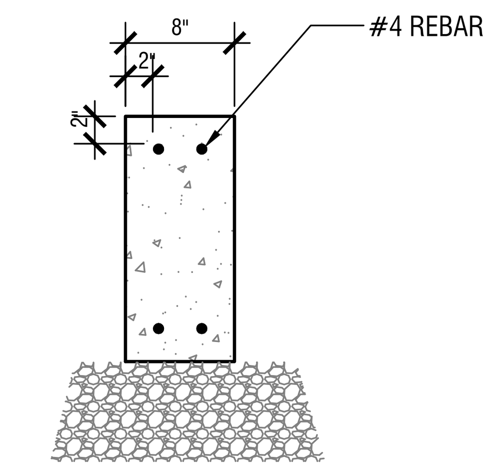

SECTION A

NOTES:
1. GRIND ALL WELDS SMOOTH TO REMOVE BURRS AND SHARP EDGES.
2. PROVIDE SHOP DRAWINGS SHOWING ALL DIMS., MATERIALS, JOINTS, CONNECTIONS, FINISHES, ETC. TO BE SUBMITTED FOR APPROVAL.

2 SECTION - HANDRAIL AND CHEEK WALL AT STEPS
SCALE: 1" = 1'-0"

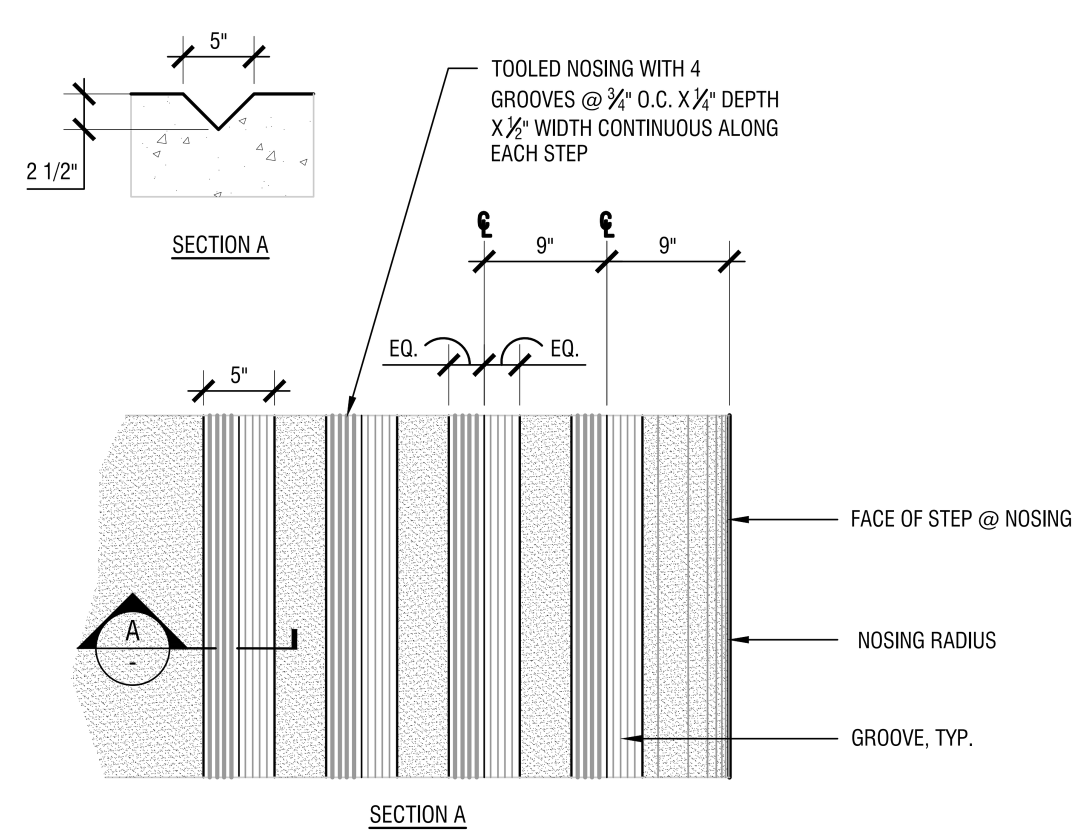

3 MASON'S NOSING @ CONCRETE STEPS
SCALE: 1" = 1'-0"
L140-SITE DETAILS.DWG

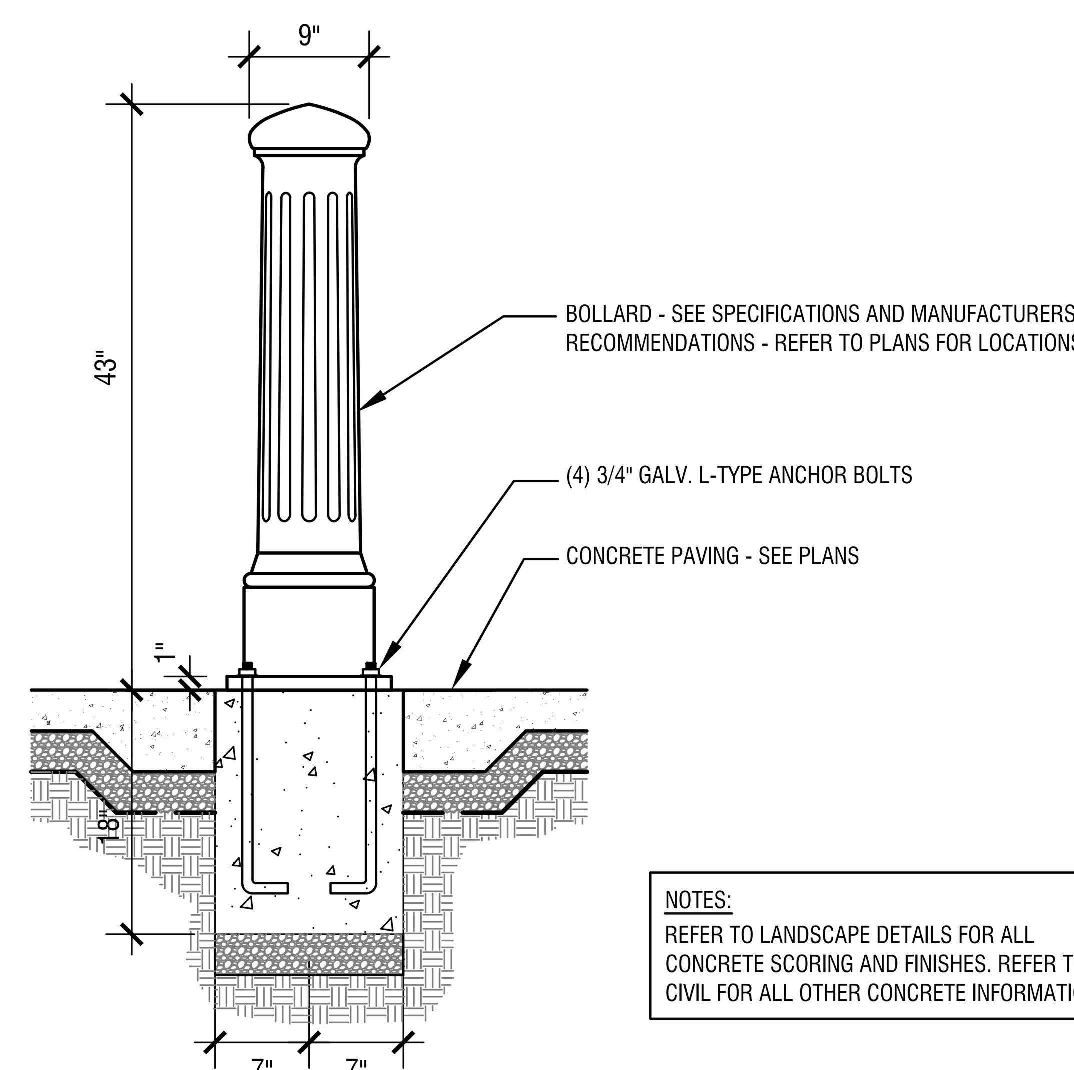

NOTES:
REFER TO LANDSCAPE DETAILS FOR ALL CONCRETE SCORING AND FINISHES. REFER TO CIVIL FOR ALL OTHER CONCRETE INFORMATION

4 BOLLARD - ELEVATION
SCALE: 1/2" = 1'-0"
L140-SITE DETAILS.DWG

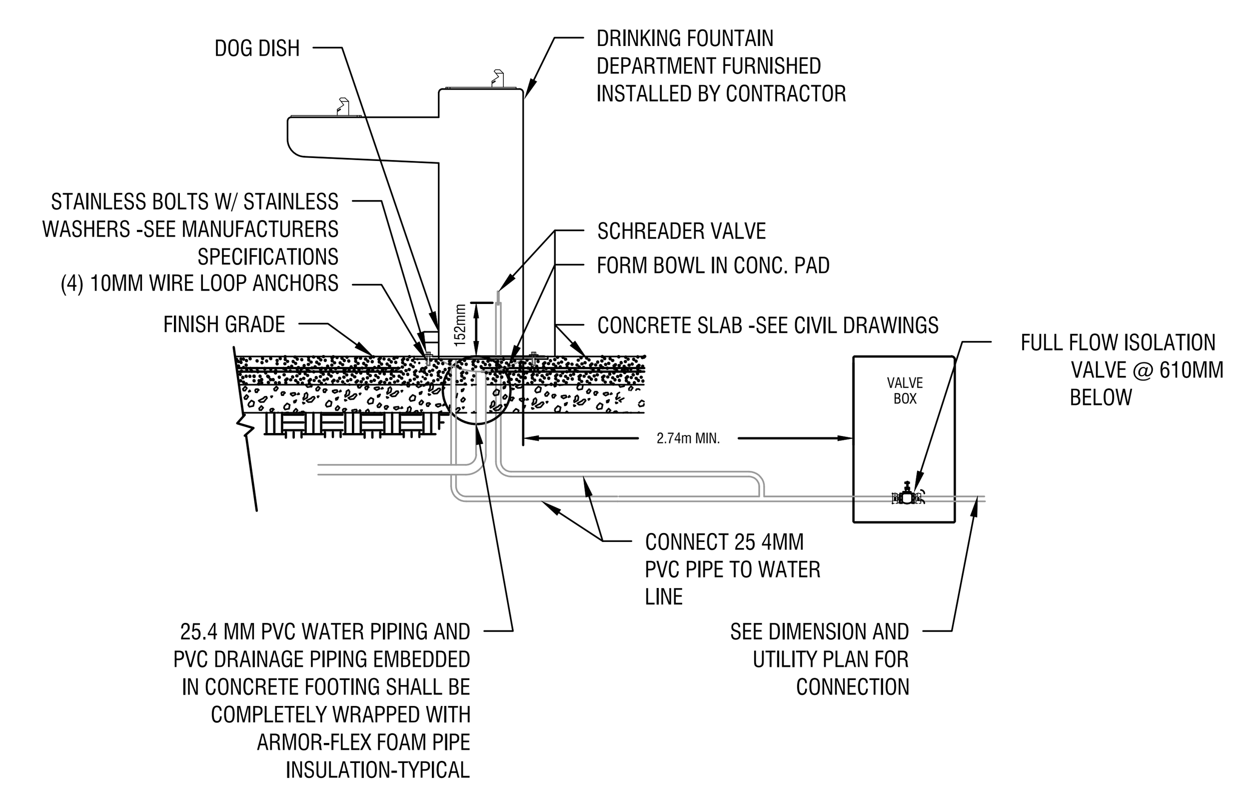

5 DRINKING FOUNTAIN - SECTION
SCALE: 1/4" = 1'-0"
L140-SITE DETAILS.DWG

PRELIMINARY

Mayer/Reed
Mayer/Reed, Inc.
319 SW Washington St.
Suite 820
Portland, Oregon 97204
503.223.5953

S. 1ST AND STRAND STREETS ROAD AND UTILITY EXTENSIONS

ST. HELENS, OREGON
SITE MATERIALS PLANS

SITE DETAILS

TITLE

#	DATE	DESCRIPTION

REVISIONS

DATUM

MS — DRAWN BY
SVS — CHECKED BY

90% DESIGN — STATUS

JANUARY 10, 2021 — DATE

19823 — PROJECT NUMBER

L1.41

© 2021 OTAK, INC.
If this drawing is not 22" x 34", it has been reduced/enlarged. Scale accordingly.

Plotted: Jan 07, 2022 - 5:53pm mscherer M:\1 LA PROJECTS\SHS-21014\2 DRAWINGS\1 CAD\4. SHEETS\L140-Site Details.dwg Layout Name: L1.41

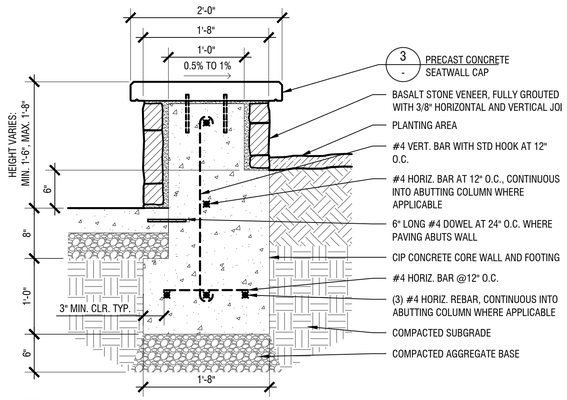

1 STONE VENEER SEATWALL
SCALE: 1"= 1'-0"
L140-SITE DETAILS.DWG

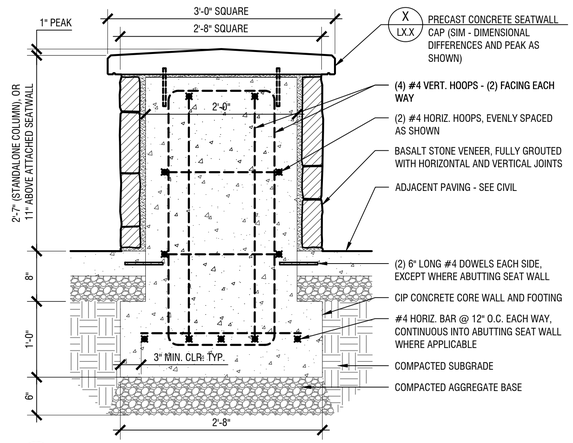

2 STONE VENEER END COLUMN - SECTION
SCALE: 1"= 1'-0"
L140-SITE DETAILS.DWG

NOTES:

1. PROVIDE SHOP DRAWINGS FOR APPROVAL BY OWNER'S REPRESENTATIVE.
2. CAP SHALL BE 24" WIDE ADN 23 5/8"LONG, FOR 24" SPACING WITH 3/8 MORTER JOINT.

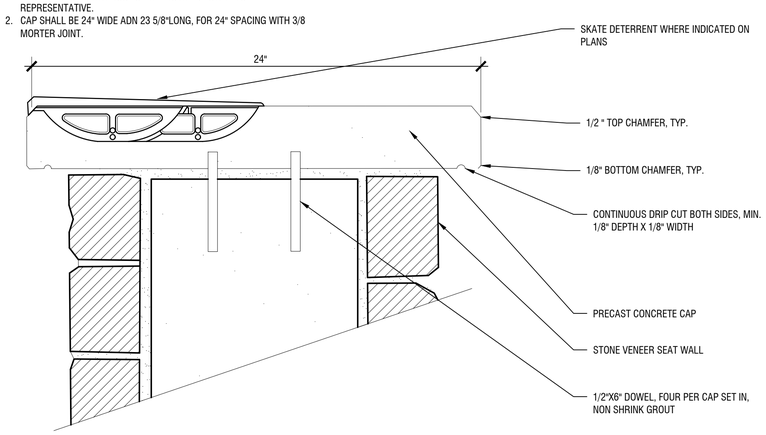

3 PRECAST CONCRETE SEATWALL CAP
SCALE: 3"= 1'-0"
DETAIL.DWG

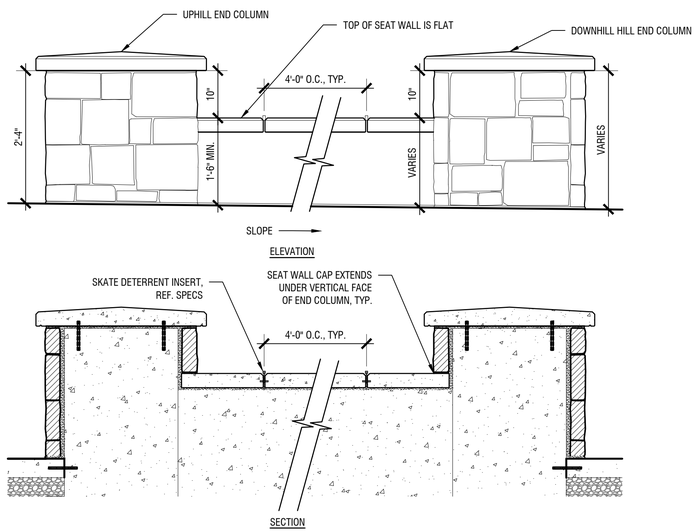

4 STONE VENEER SEAT WALL & END COLUMN - SECTION ELEVATION
SCALE: 3/4"= 1'-0"

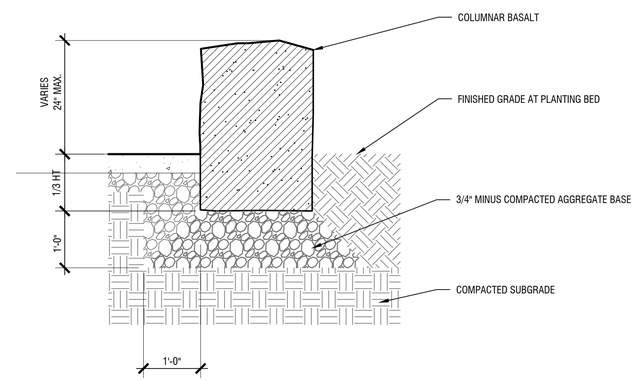

5 BASALT COLUMN - SECTION
SCALE: 3/4"= 1'-0"

PRELIMINARY

Mayer/Reed
Mayer/Reed, Inc.
319 SW Washington St.
Suite 820
Portland, Oregon 97204
503.223.5953

S. 1ST AND STRAND STREETS ROAD AND UTILITY EXTENSIONS

ST. HELENS, OREGON
SITE MATERIALS PLANS

SITE DETAILS

TITLE

#	DATE	DESCRIPTION

REVISIONS

DATUM

MS — DRAWN BY
SVS — CHECKED BY

90% DESIGN
STATUS

JANUARY 10, 2021
DATE

19823
PROJECT NUMBER

L1.42

© 2021 OTAK, INC.

If this drawing is not 22" x 34", it has been reduced/enlarged. Scale accordingly.

Plotted: Jan 07, 2022 - 5:53pm mschaerer M:\11 LA PROJECTS\SHS-210142_DRAWINGS\1. CAD\4. SHEETS\L140-Site Details.dwg Layout Name: L1.42

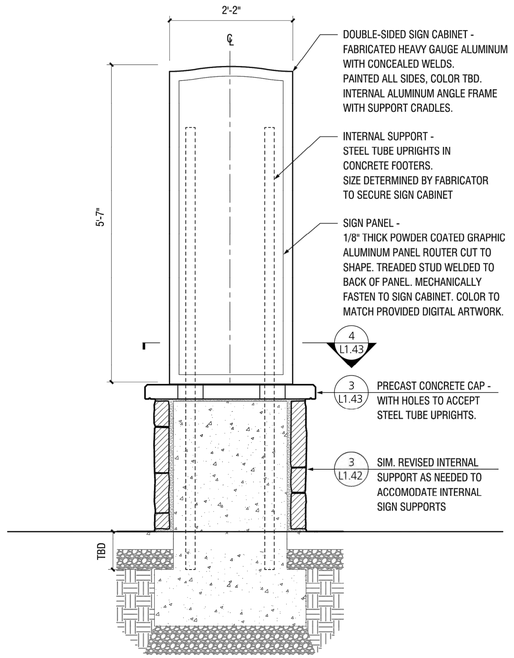

1 INTERPRETIVE PYLON AT STONE VENEER BASE - FRONT, BACK ELEVATION
SCALE: 3/4"= 1'-0"

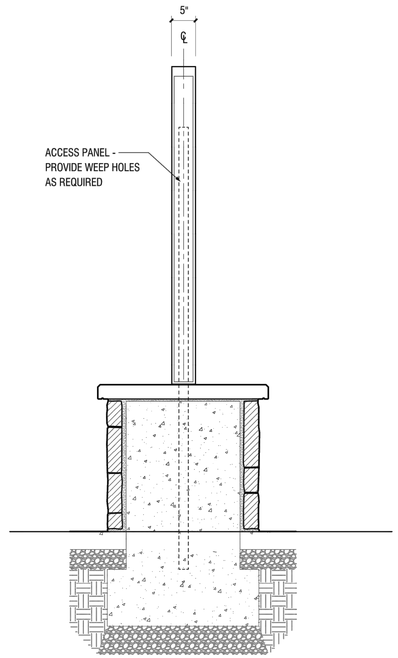

2 INTERPRETIVE PYLON AT STONE VENEER BASE - SIDE VIEW
SCALE: 3/4"= 1'-0"

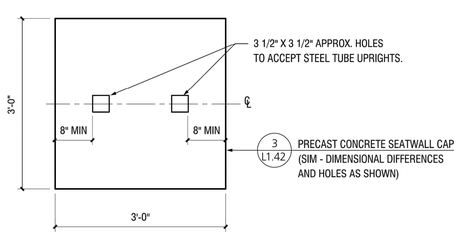

3 PRECAST CONCRETE CAP HOLE LOCATION DETAIL - PLAN VIEW
SCALE: 3/4"= 1'-0"

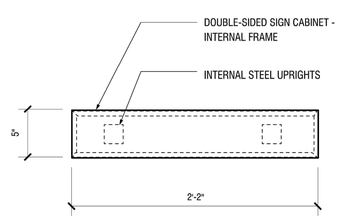

4 SIGN CABINET DETAIL - PLAN VIEW
SCALE: 1 1/2"= 1'-0"

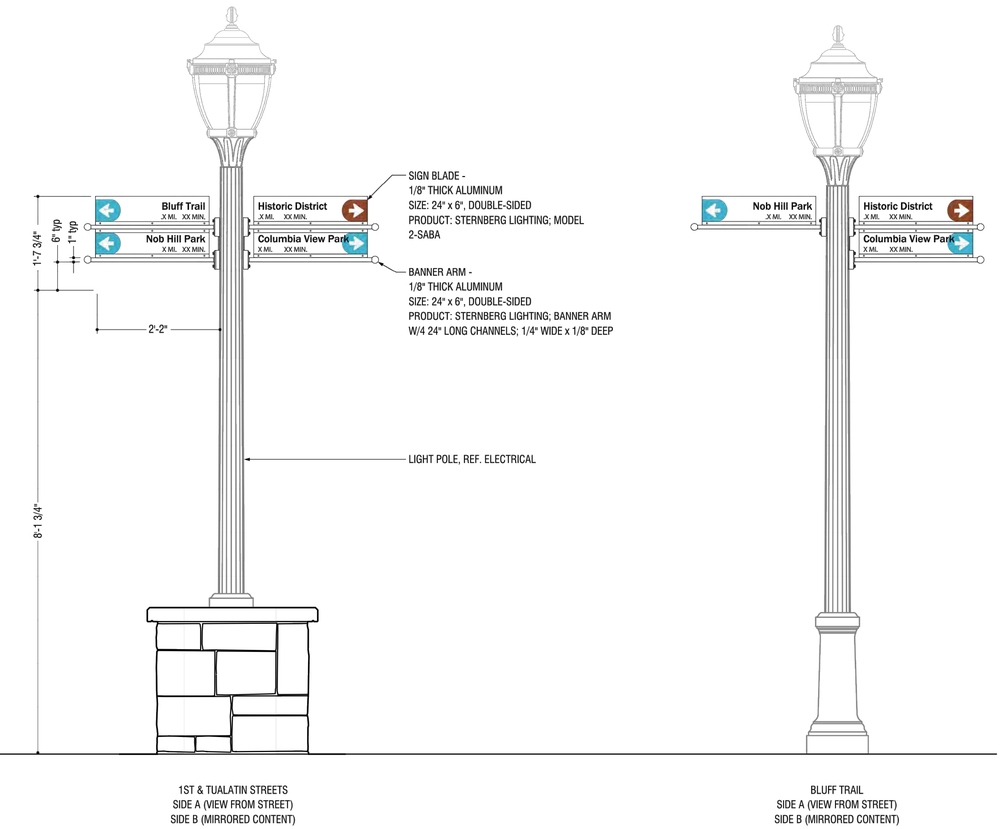

5 PEDESTRIAN DIRECTIONAL
SCALE: 3/4"= 1'-0"

PRELIMINARY

Mayer/Reed
Mayer/Reed, Inc.
319 SW Washington St.
Suite 820
Portland, Oregon 97204
503.223.5953

S. 1ST AND STRAND STREETS ROAD AND UTILITY EXTENSIONS

ST. HELENS, OREGON
SITE MATERIALS PLANS

SITE DETAILS

TITLE

#	DATE	DESCRIPTION

REVISIONS

DATUM

MS — DRAWN BY
SVS — CHECKED BY

90% DESIGN — STATUS

JANUARY 10, 2021 — DATE

19823 — PROJECT NUMBER

L1.43

© 2021 OTAK, INC.

If this drawing is not 22" x 34", it has been reduced/enlarged. Scale accordingly.

Plotted: Jan 07, 2022 - 5:53pm, mscherer M:\11-LA PROJECTS\SHS-210149\2_DRAWINGS\1_CAD\4_SHEETS\L140-Site Details.dwg Layout Name: L1.43

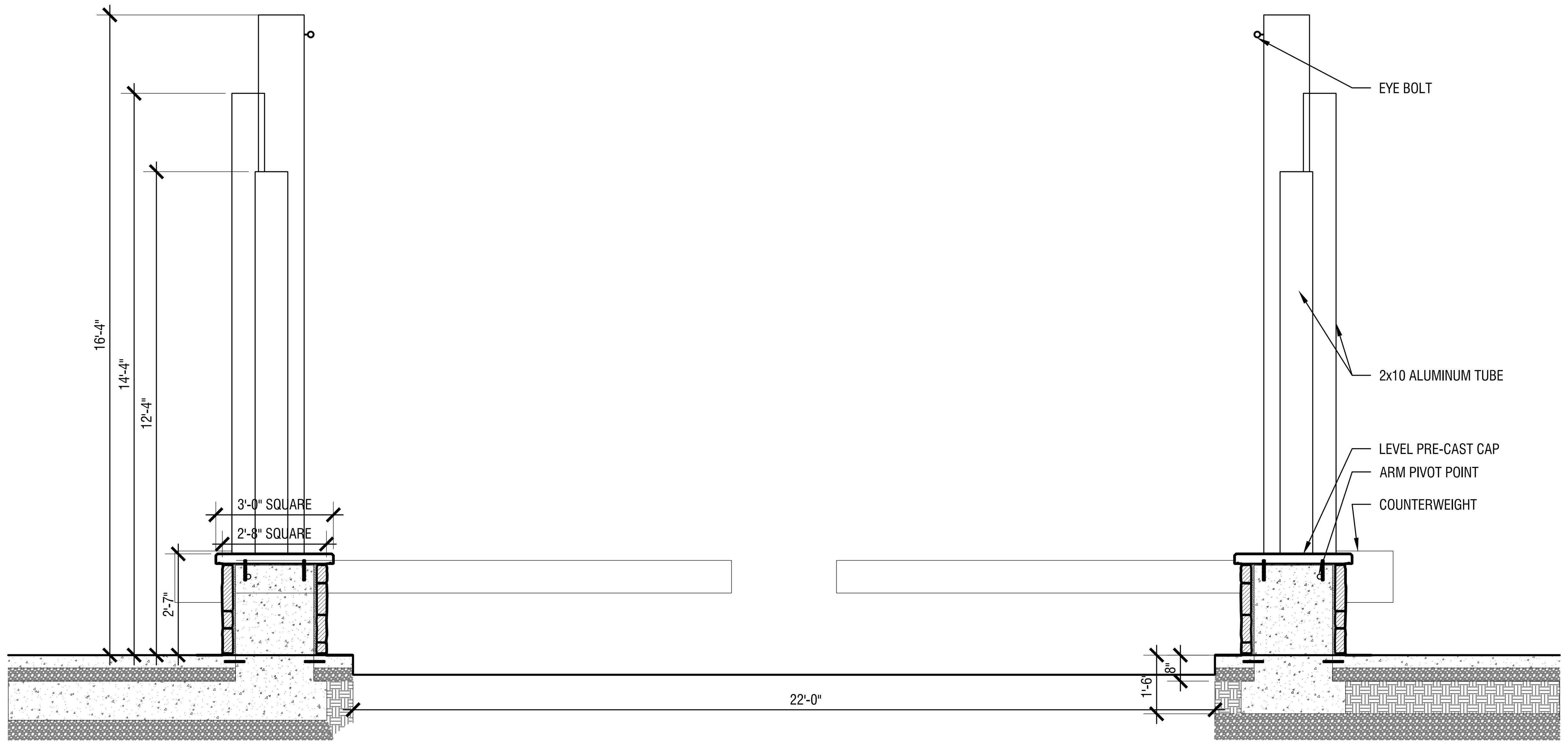

1 TRAFFIC BARRIER ARM - ELEVATION
SCALE: 3/8"= 1'-0"
L140-SITE DETAILS.DWG

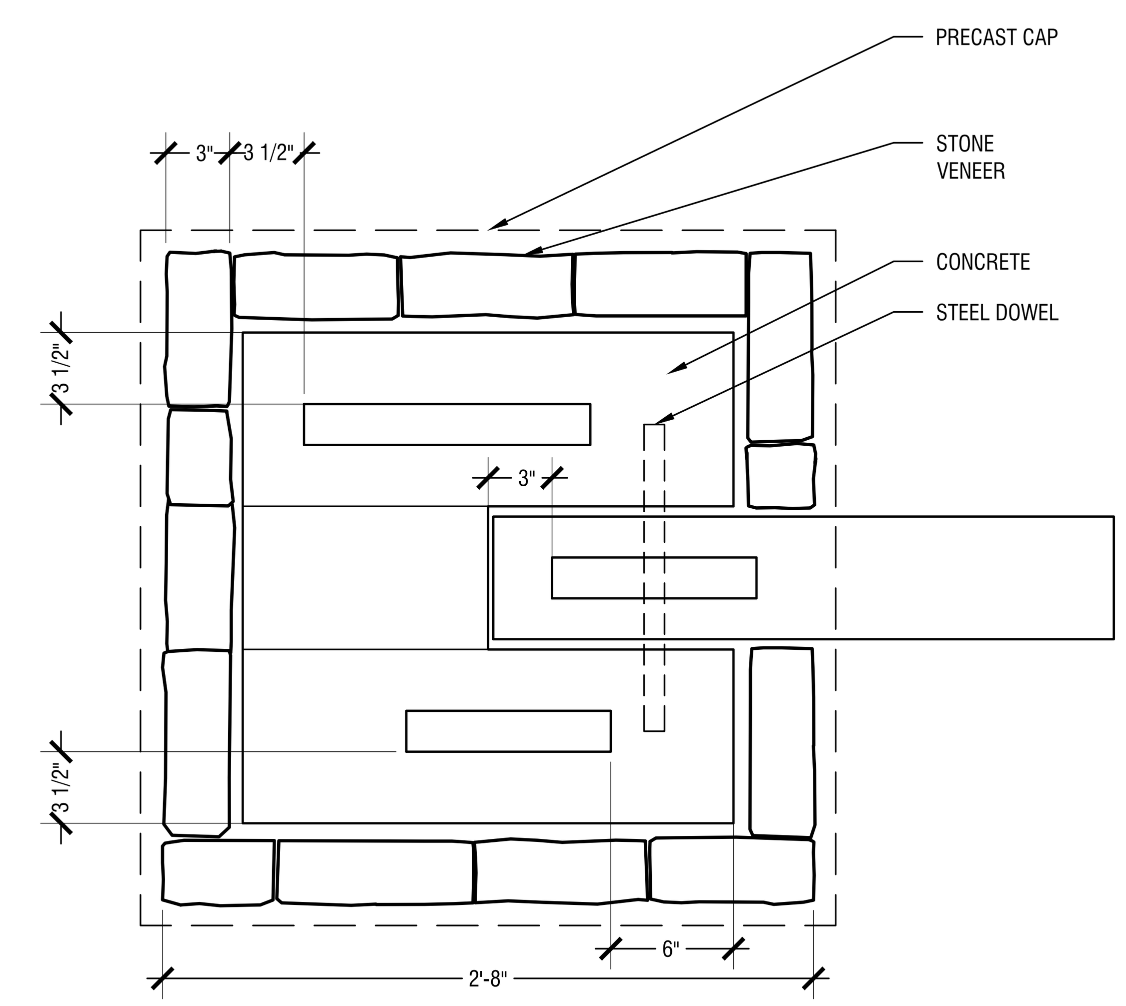

2 TRAFFIC BARRIER ARM - PLAN
SCALE: 1 1/2"= 1'-0"
DETAIL.DWG

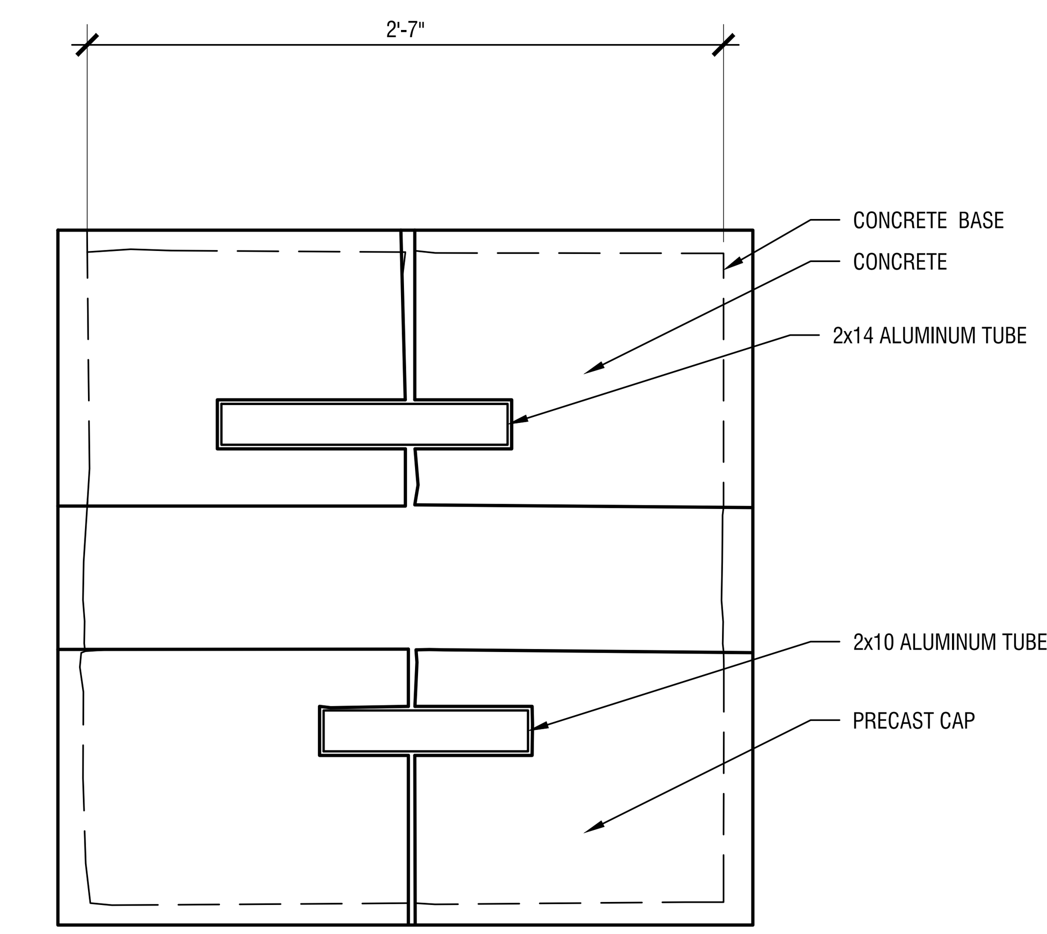

3 TRAFFIC BARRIER ARM - PLAN
SCALE: 1 1/2"= 1'-0"
DETAIL.DWG

Plotted: Jan 07, 2022 - 5:54pm mscherer M:\1 LA PROJECTS\SHS-210142 DRAWINGS\1 CAD\4 SHEETS\L140-Site Details.dwg Layout Name: L1.44

City of St. Helens FOUNDED 1850

PRELIMINARY

Mayer/Reed
Mayer/Reed, Inc.
319 SW Washington St.
Suite 820
Portland, Oregon 97204
503.223.5953

S. 1ST AND STRAND STREETS ROAD AND UTILITY EXTENSIONS

ST. HELENS, OREGON
SITE MATERIALS PLANS

SITE DETAILS

TITLE

#	DATE	DESCRIPTION

REVISIONS

DATUM

MS SVS
DRAWN BY CHECKED BY

90% DESIGN
STATUS

JANUARY 10, 2021
DATE

19823
PROJECT NUMBER

L1.44

© 2021 OTAK, INC.
If this drawing is not 22" x 34", it has been reduced/enlarged. Scale accordingly.

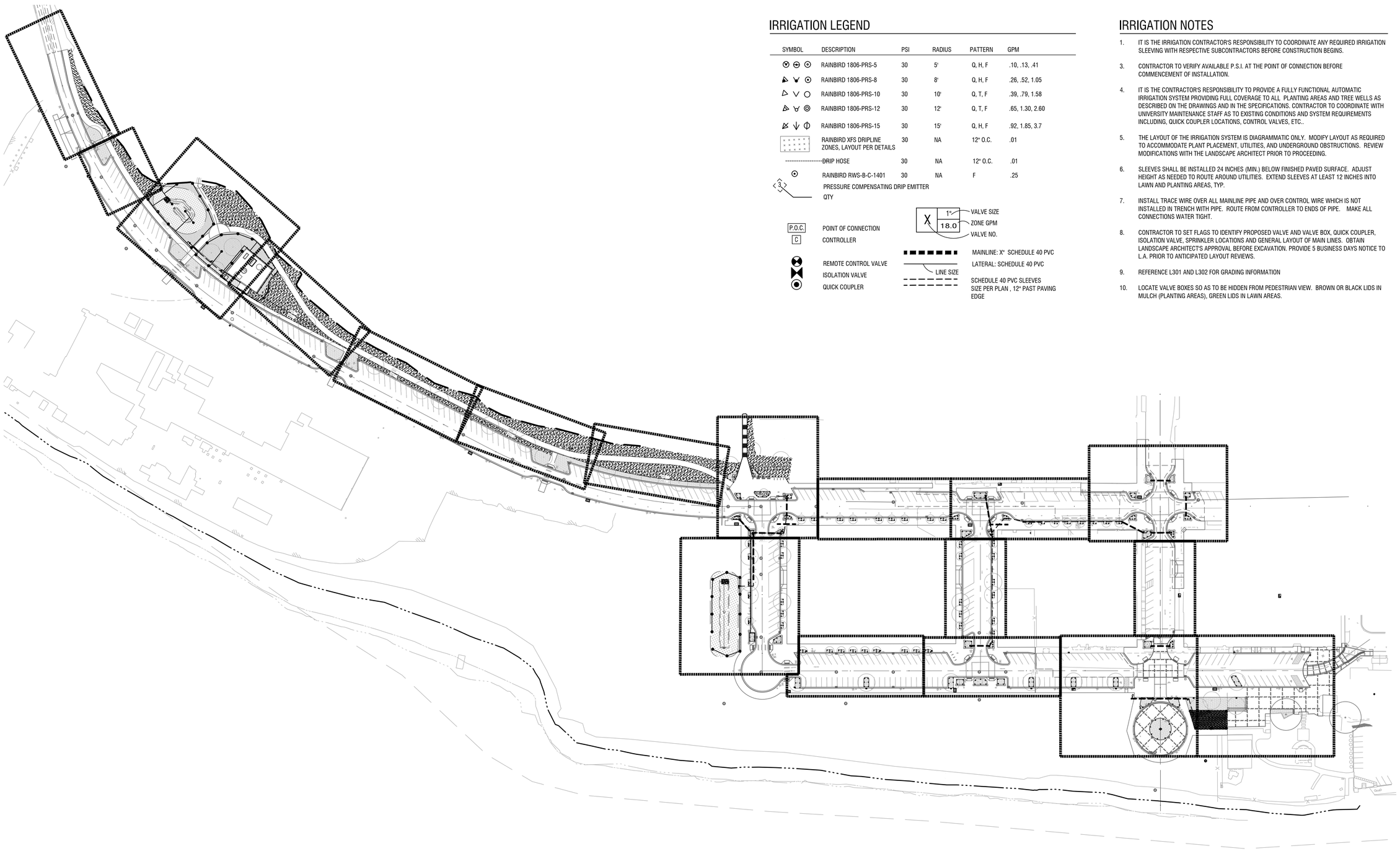

IRRIGATION LEGEND

SYMBOL	DESCRIPTION	PSI	RADIUS	PATTERN	GPM
	RAINBIRD 1806-PRS-5	30	5'	Q, H, F	.10, .13, .41
	RAINBIRD 1806-PRS-8	30	8'	Q, H, F	.26, .52, 1.05
	RAINBIRD 1806-PRS-10	30	10'	Q, T, F	.39, .79, 1.58
	RAINBIRD 1806-PRS-12	30	12'	Q, T, F	.65, 1.30, 2.60
	RAINBIRD 1806-PRS-15	30	15'	Q, H, F	.92, 1.85, 3.7
	RAINBIRD XFS DRIPLINE ZONES, LAYOUT PER DETAILS	30	NA	12" O.C.	.01
	DRIP HOSE	30	NA	12" O.C.	.01
	RAINBIRD RWS-B-C-1401	30	NA	F	.25

3 — QTY

PRESSURE COMPENSATING DRIP EMITTER

X — 1" VALVE SIZE; 18.0 ZONE GPM; VALVE NO.

P.O.C. — POINT OF CONNECTION

C — CONTROLLER

REMOTE CONTROL VALVE

ISOLATION VALVE

QUICK COUPLER

MAINLINE: X" SCHEDULE 40 PVC

LATERAL: SCHEDULE 40 PVC

LINE SIZE

SCHEDULE 40 PVC SLEEVES SIZE PER PLAN , 12" PAST PAVING EDGE

IRRIGATION NOTES

1. IT IS THE IRRIGATION CONTRACTOR'S RESPONSIBILITY TO COORDINATE ANY REQUIRED IRRIGATION SLEEVING WITH RESPECTIVE SUBCONTRACTORS BEFORE CONSTRUCTION BEGINS.
3. CONTRACTOR TO VERIFY AVAILABLE P.S.I. AT THE POINT OF CONNECTION BEFORE COMMENCEMENT OF INSTALLATION.
4. IT IS THE CONTRACTOR'S RESPONSIBILITY TO PROVIDE A FULLY FUNCTIONAL AUTOMATIC IRRIGATION SYSTEM PROVIDING FULL COVERAGE TO ALL PLANTING AREAS AND TREE WELLS AS DESCRIBED ON THE DRAWINGS AND IN THE SPECIFICATIONS. CONTRACTOR TO COORDINATE WITH UNIVERSITY MAINTENANCE STAFF AS TO EXISTING CONDITIONS AND SYSTEM REQUIREMENTS INCLUDING, QUICK COUPLER LOCATIONS, CONTROL VALVES, ETC..
5. THE LAYOUT OF THE IRRIGATION SYSTEM IS DIAGRAMMATIC ONLY. MODIFY LAYOUT AS REQUIRED TO ACCOMMODATE PLANT PLACEMENT, UTILITIES, AND UNDERGROUND OBSTRUCTIONS. REVIEW MODIFICATIONS WITH THE LANDSCAPE ARCHITECT PRIOR TO PROCEEDING.
6. SLEEVES SHALL BE INSTALLED 24 INCHES (MIN.) BELOW FINISHED PAVED SURFACE. ADJUST HEIGHT AS NEEDED TO ROUTE AROUND UTILITIES. EXTEND SLEEVES AT LEAST 12 INCHES INTO LAWN AND PLANTING AREAS, TYP.
7. INSTALL TRACE WIRE OVER ALL MAINLINE PIPE AND OVER CONTROL WIRE WHICH IS NOT INSTALLED IN TRENCH WITH PIPE. ROUTE FROM CONTROLLER TO ENDS OF PIPE. MAKE ALL CONNECTIONS WATER TIGHT.
8. CONTRACTOR TO SET FLAGS TO IDENTIFY PROPOSED VALVE AND VALVE BOX, QUICK COUPLER, ISOLATION VALVE, SPRINKLER LOCATIONS AND GENERAL LAYOUT OF MAIN LINES. OBTAIN LANDSCAPE ARCHITECT'S APPROVAL BEFORE EXCAVATION. PROVIDE 5 BUSINESS DAYS NOTICE TO L.A. PRIOR TO ANTICIPATED LAYOUT REVIEWS.
9. REFERENCE L301 AND L302 FOR GRADING INFORMATION
10. LOCATE VALVE BOXES SO AS TO BE HIDDEN FROM PEDESTRIAN VIEW. BROWN OR BLACK LIDS IN MULCH (PLANTING AREAS), GREEN LIDS IN LAWN AREAS.

1 **IRRIGATION KEY PLAN**
SCALE: 1" = 80'-0"

0 40' 80' 160'

N

PRELIMINARY

Mayer/Reed

Mayer/Reed, Inc.
319 SW Washington St.
Suite 820
Portland, Oregon 97204
503.223.5953

S. 1ST AND STRAND STREETS ROAD AND UTILITY EXTENSIONS

ST. HELENS, OREGON
IRRIGATION PLANS

IRRIGATION KEY PLAN

TITLE

#	DATE	DESCRIPTION

REVISIONS

DATUM

MS — DRAWN BY
SVS — CHECKED BY

90% DESIGN — STATUS

JANUARY 10, 2021 — DATE

19823 — PROJECT NUMBER

L2.00

© 2021 OTAK, INC.

If this drawing is not 22" x 34", it has been reduced/enlarged. Scale accordingly.

Plotted: Jan 07, 2022 - 7:42pm ssimms M:\11A PROJECTS\SHS-210142_DRAWINGS\1_CAD\4_SHEETS\L200-Irrigation Plans.dwg Layout Name: L2.00

X IRRIGATION PLAN - 1ST STREET
SCALE: 1"= 10'-0"

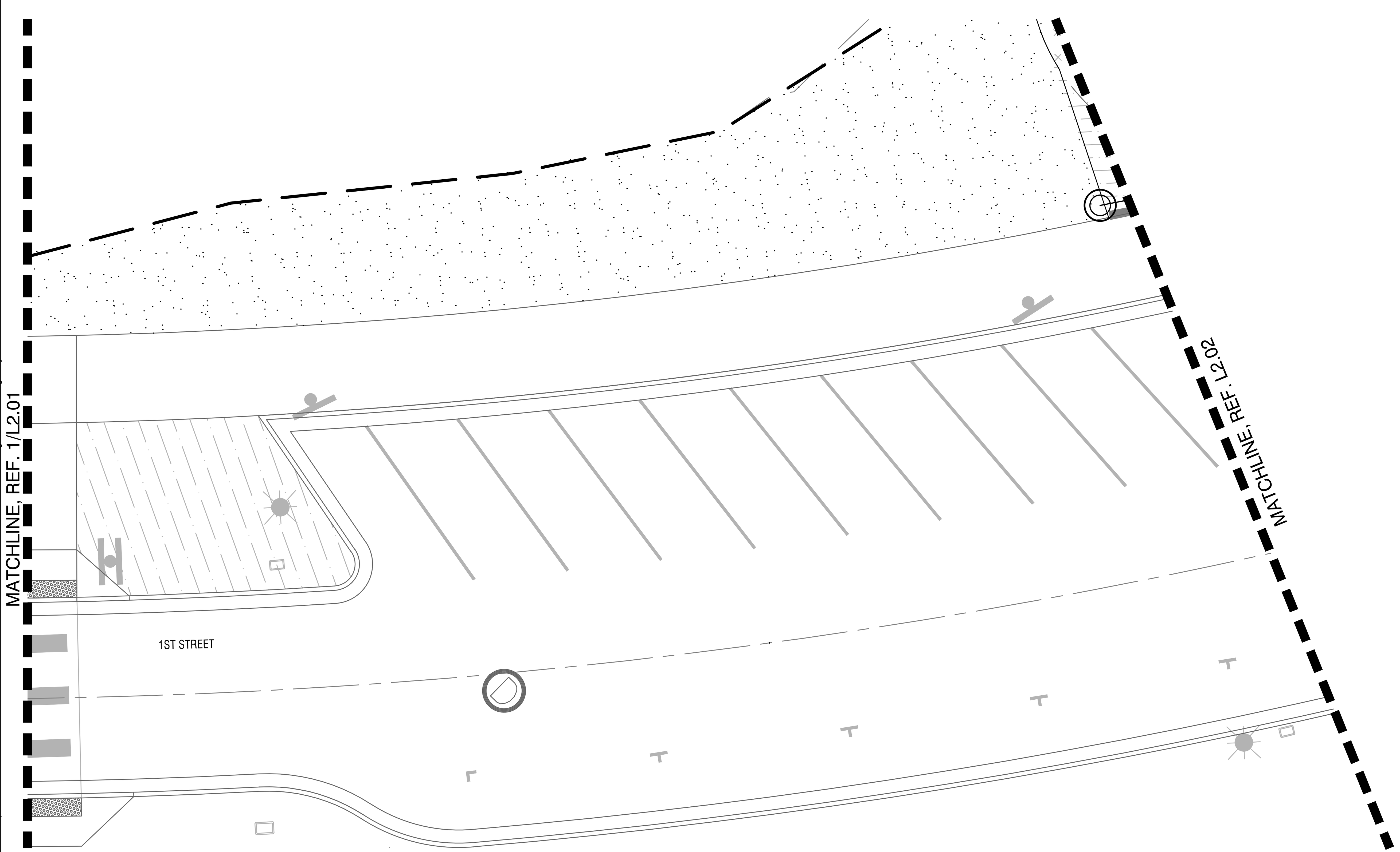

X IRRIGATION PLAN - 1ST STREET
SCALE: X"= X'-0"

IRRIGATION LEGEND

SYMBOL	DESCRIPTION	PSI	RADIUS	PATTERN	GPM
	RAINBIRD 1806-PRS-5	30	5'	Q, H, F	.10, .13, .41
	RAINBIRD 1806-PRS-8	30	8'	Q, H, F	.26, .52, 1.05
	RAINBIRD 1806-PRS-10	30	10'	Q, T, F	.39, .79, 1.58
	RAINBIRD 1806-PRS-12	30	12'	Q, T, F	.65, 1.30, 2.60
	RAINBIRD 1806-PRS-15	30	15'	Q, H, F	.92, 1.85, 3.7
	RAINBIRD XFS DRIPLINE ZONES, LAYOUT PER DETAILS	30	NA	12" O.C.	.01
	DRIP HOSE	30	NA	12" O.C.	.01
	RAINBIRD RWS-B-C-1401	30	NA	F	.25
3	PRESSURE COMPENSATING DRIP EMITTER QTY				

P.O.C. POINT OF CONNECTION
C CONTROLLER

REMOTE CONTROL VALVE
ISOLATION VALVE
QUICK COUPLER

X 1" 18.0 — VALVE SIZE, ZONE GPM, VALVE NO.

MAINLINE: X" SCHEDULE 40 PVC
LATERAL: SCHEDULE 40 PVC (LINE SIZE)
SCHEDULE 40 PVC SLEEVES SIZE PER PLAN , 12" PAST PAVING EDGE

IRRIGATION NOTES

1. IT IS THE IRRIGATION CONTRACTOR'S RESPONSIBILITY TO COORDINATE ANY REQUIRED IRRIGATION SLEEVING WITH RESPECTIVE SUBCONTRACTORS BEFORE CONSTRUCTION BEGINS.

3. CONTRACTOR TO VERIFY AVAILABLE P.S.I. AT THE POINT OF CONNECTION BEFORE COMMENCEMENT OF INSTALLATION.

4. IT IS THE CONTRACTOR'S RESPONSIBILITY TO PROVIDE A FULLY FUNCTIONAL AUTOMATIC IRRIGATION SYSTEM PROVIDING FULL COVERAGE TO ALL PLANTING AREAS AND TREE WELLS AS DESCRIBED ON THE DRAWINGS AND IN THE SPECIFICATIONS. CONTRACTOR TO COORDINATE WITH UNIVERSITY MAINTENANCE STAFF AS TO EXISTING CONDITIONS AND SYSTEM REQUIREMENTS INCLUDING, QUICK COUPLER LOCATIONS, CONTROL VALVES, ETC..

5. THE LAYOUT OF THE IRRIGATION SYSTEM IS DIAGRAMMATIC ONLY. MODIFY LAYOUT AS REQUIRED TO ACCOMMODATE PLANT PLACEMENT, UTILITIES, AND UNDERGROUND OBSTRUCTIONS. REVIEW MODIFICATIONS WITH THE LANDSCAPE ARCHITECT PRIOR TO PROCEEDING.

6. SLEEVES SHALL BE INSTALLED 24 INCHES (MIN.) BELOW FINISHED PAVED SURFACE. ADJUST HEIGHT AS NEEDED TO ROUTE AROUND UTILITIES. EXTEND SLEEVES AT LEAST 12 INCHES INTO LAWN AND PLANTING AREAS, TYP.

7. INSTALL TRACE WIRE OVER ALL MAINLINE PIPE AND OVER CONTROL WIRE WHICH IS NOT INSTALLED IN TRENCH WITH PIPE. ROUTE FROM CONTROLLER TO ENDS OF PIPE. MAKE ALL CONNECTIONS WATER TIGHT.

8. CONTRACTOR TO SET FLAGS TO IDENTIFY PROPOSED VALVE AND VALVE BOX, QUICK COUPLER, ISOLATION VALVE, SPRINKLER LOCATIONS AND GENERAL LAYOUT OF MAIN LINES. OBTAIN LANDSCAPE ARCHITECT'S APPROVAL BEFORE EXCAVATION. PROVIDE 5 BUSINESS DAYS NOTICE TO L.A. PRIOR TO ANTICIPATED LAYOUT REVIEWS.

9. REFERENCE L301 AND L302 FOR GRADING INFORMATION

10. LOCATE VALVE BOXES SO AS TO BE HIDDEN FROM PEDESTRIAN VIEW. BROWN OR BLACK LIDS IN MULCH (PLANTING AREAS), GREEN LIDS IN LAWN AREAS.

PRELIMINARY

Mayer/Reed

Mayer/Reed, Inc.
319 SW Washington St.
Suite 820
Portland, Oregon 97204
503.223.5953

S. 1ST AND STRAND STREETS ROAD AND UTILITY EXTENSIONS

ST. HELENS, OREGON
IRRIGATION PLANS

IRRIGATION PLANS

TITLE

#	DATE	DESCRIPTION

REVISIONS

DATUM

MS — DRAWN BY
SVS — CHECKED BY

90% DESIGN
STATUS

JANUARY 10, 2021
DATE

19823
PROJECT NUMBER

L2.01

© 2021 OTAK, INC.

If this drawing is not 22" x 34", it has been reduced/enlarged. Scale accordingly.

Plotted: Jan 07, 2022 - 7:42pm ssimms M:\1 LA PROJECTS\SHS-21014\2_DRAWINGS\1_CAD\4_SHEETS\L200-Irrigation Plans.dwg Layout Name: L2.01

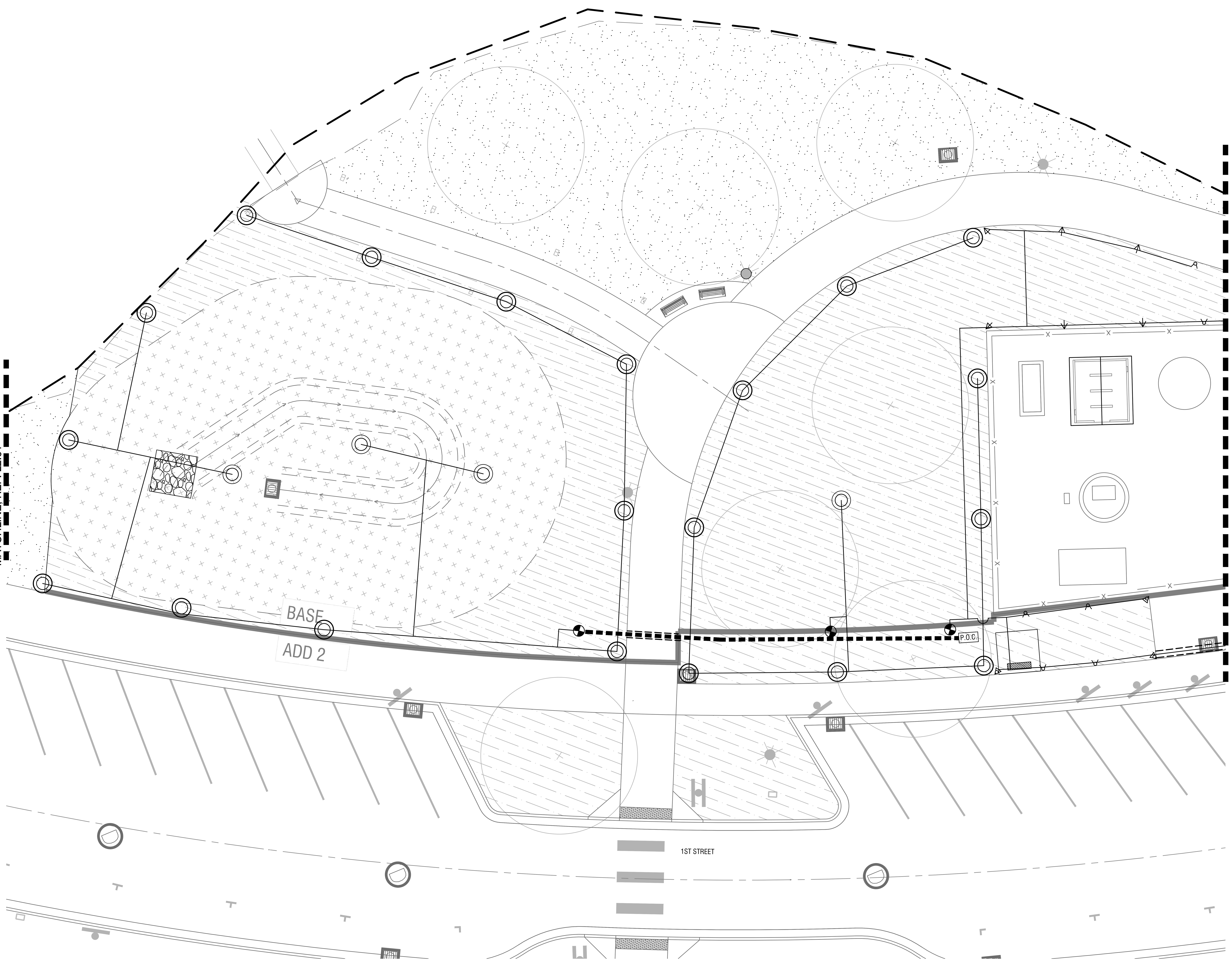

1 IRRIGATION PLAN - BLUFF TRAIL SOUTH TERMINUS
SCALE: 1"= 10'-0"

IRRIGATION LEGEND

SYMBOL	DESCRIPTION	PSI	RADIUS	PATTERN	GPM
	RAINBIRD 1806-PRS-5	30	5'	Q, H, F	.10, .13, .41
	RAINBIRD 1806-PRS-8	30	8'	Q, H, F	.26, .52, 1.05
	RAINBIRD 1806-PRS-10	30	10'	Q, T, F	.39, .79, 1.58
	RAINBIRD 1806-PRS-12	30	12'	Q, T, F	.65, 1.30, 2.60
	RAINBIRD 1806-PRS-15	30	15'	Q, H, F	.92, 1.85, 3.7
	RAINBIRD XFS DRIPLINE ZONES, LAYOUT PER DETAILS	30	NA	12" O.C.	.01
	DRIP HOSE	30	NA	12" O.C.	.01
	RAINBIRD RWS-B-C-1401	30	NA	F	.25
3	PRESSURE COMPENSATING DRIP EMITTER QTY				

P.O.C. — POINT OF CONNECTION
C — CONTROLLER
REMOTE CONTROL VALVE
ISOLATION VALVE
QUICK COUPLER

X | 1" | 18.0 — VALVE SIZE, ZONE GPM, VALVE NO.

MAINLINE: X" SCHEDULE 40 PVC
LATERAL: SCHEDULE 40 PVC (LINE SIZE)
SCHEDULE 40 PVC SLEEVES SIZE PER PLAN , 12" PAST PAVING EDGE

IRRIGATION NOTES

1. IT IS THE IRRIGATION CONTRACTOR'S RESPONSIBILITY TO COORDINATE ANY REQUIRED IRRIGATION SLEEVING WITH RESPECTIVE SUBCONTRACTORS BEFORE CONSTRUCTION BEGINS.
3. CONTRACTOR TO VERIFY AVAILABLE P.S.I. AT THE POINT OF CONNECTION BEFORE COMMENCEMENT OF INSTALLATION.
4. IT IS THE CONTRACTOR'S RESPONSIBILITY TO PROVIDE A FULLY FUNCTIONAL AUTOMATIC IRRIGATION SYSTEM PROVIDING FULL COVERAGE TO ALL PLANTING AREAS AND TREE WELLS AS DESCRIBED ON THE DRAWINGS AND IN THE SPECIFICATIONS. CONTRACTOR TO COORDINATE WITH UNIVERSITY MAINTENANCE STAFF AS TO EXISTING CONDITIONS AND SYSTEM REQUIREMENTS INCLUDING, QUICK COUPLER LOCATIONS, CONTROL VALVES, ETC..
5. THE LAYOUT OF THE IRRIGATION SYSTEM IS DIAGRAMMATIC ONLY. MODIFY LAYOUT AS REQUIRED TO ACCOMMODATE PLANT PLACEMENT, UTILITIES, AND UNDERGROUND OBSTRUCTIONS. REVIEW MODIFICATIONS WITH THE LANDSCAPE ARCHITECT PRIOR TO PROCEEDING.
6. SLEEVES SHALL BE INSTALLED 24 INCHES (MIN.) BELOW FINISHED PAVED SURFACE. ADJUST HEIGHT AS NEEDED TO ROUTE AROUND UTILITIES. EXTEND SLEEVES AT LEAST 12 INCHES INTO LAWN AND PLANTING AREAS, TYP.
7. INSTALL TRACE WIRE OVER ALL MAINLINE PIPE AND OVER CONTROL WIRE WHICH IS NOT INSTALLED IN TRENCH WITH PIPE. ROUTE FROM CONTROLLER TO ENDS OF PIPE. MAKE ALL CONNECTIONS WATER TIGHT.
8. CONTRACTOR TO SET FLAGS TO IDENTIFY PROPOSED VALVE AND VALVE BOX, QUICK COUPLER, ISOLATION VALVE, SPRINKLER LOCATIONS AND GENERAL LAYOUT OF MAIN LINES. OBTAIN LANDSCAPE ARCHITECT'S APPROVAL BEFORE EXCAVATION. PROVIDE 5 BUSINESS DAYS NOTICE TO L.A. PRIOR TO ANTICIPATED LAYOUT REVIEWS.
9. REFERENCE L301 AND L302 FOR GRADING INFORMATION
10. LOCATE VALVE BOXES SO AS TO BE HIDDEN FROM PEDESTRIAN VIEW. BROWN OR BLACK LIDS IN MULCH (PLANTING AREAS), GREEN LIDS IN LAWN AREAS.

PRELIMINARY

Mayer/Reed
Mayer/Reed, Inc.
319 SW Washington St.
Suite 820
Portland, Oregon 97204
503.223.5953

S. 1ST AND STRAND STREETS ROAD AND UTILITY EXTENSIONS
ST. HELENS, OREGON
IRRIGATION PLANS

IRRIGATION PLANS

TITLE

#	DATE	DESCRIPTION

REVISIONS

DATUM

MS — DRAWN BY
SVS — CHECKED BY

90% DESIGN — STATUS

JANUARY 10, 2021 — DATE

19823 — PROJECT NUMBER

L2.02

© 2021 OTAK, INC.

If this drawing is not 22" x 34", it has been reduced/enlarged. Scale accordingly.

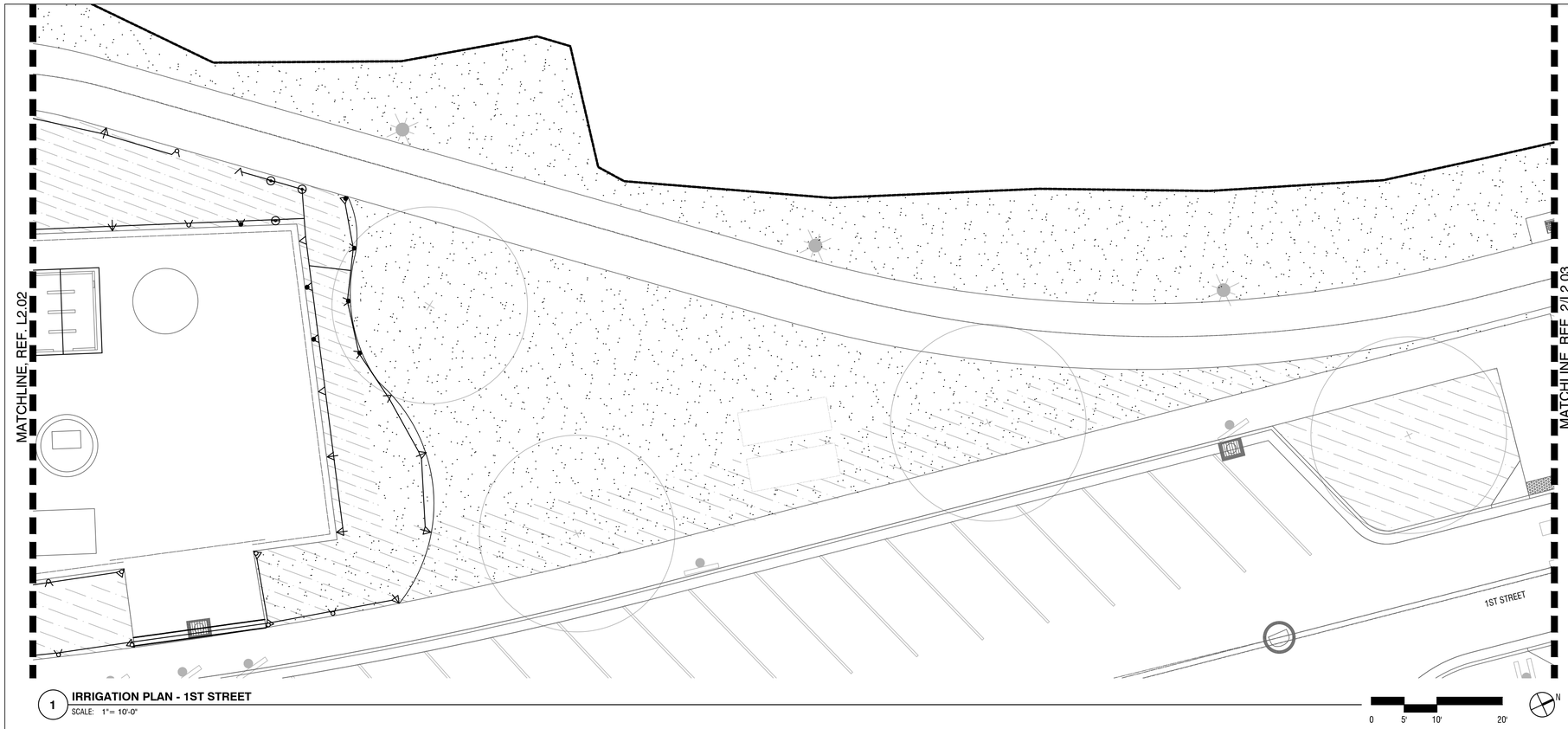

1 **IRRIGATION PLAN - 1ST STREET**
SCALE: 1"= 10'-0"

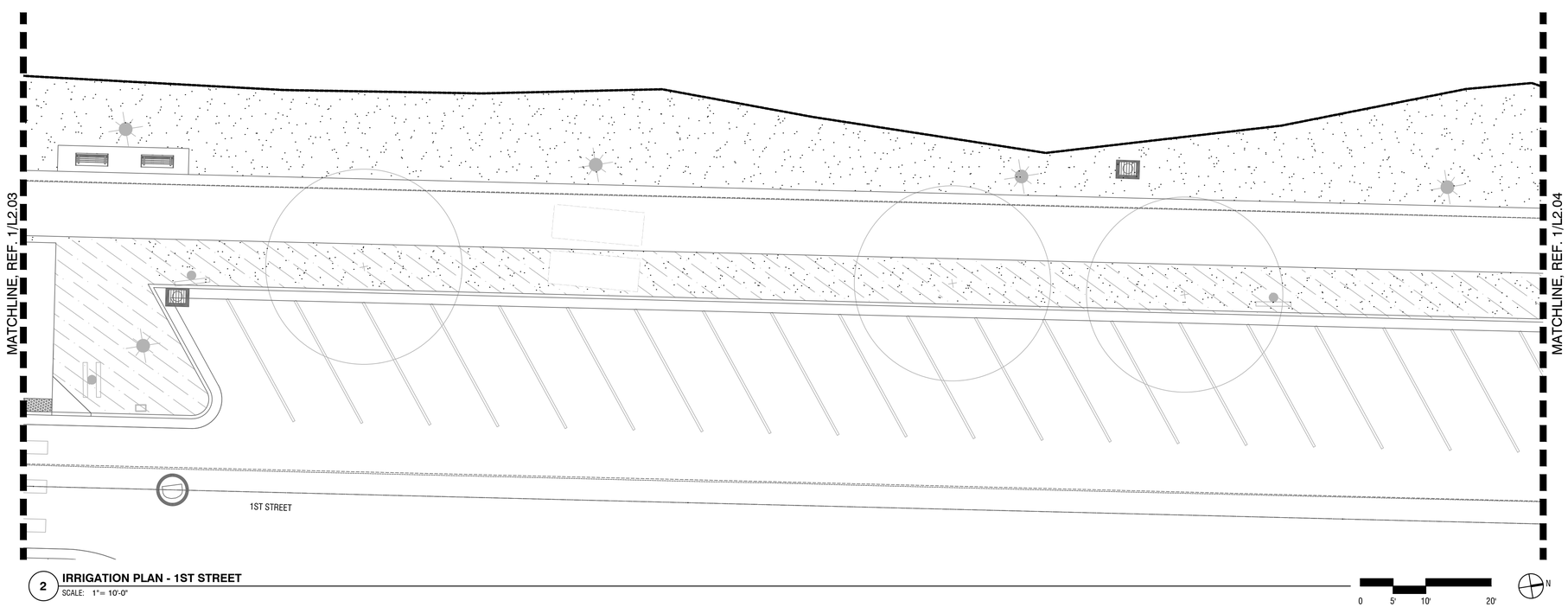

2 **IRRIGATION PLAN - 1ST STREET**
SCALE: 1"= 10'-0"

IRRIGATION LEGEND

SYMBOL	DESCRIPTION	PSI	RADIUS	PATTERN	GPM
	RAINBIRD 1806-PRS-5	30	5'	Q, H, F	.10, .13, .41
	RAINBIRD 1806-PRS-8	30	8'	Q, H, F	.26, .52, 1.05
	RAINBIRD 1806-PRS-10	30	10'	Q, T, F	.39, .79, 1.58
	RAINBIRD 1806-PRS-12	30	12'	Q, T, F	.65, 1.30, 2.60
	RAINBIRD 1806-PRS-15	30	15'	Q, H, F	.92, 1.85, 3.7
	RAINBIRD XFS DRIPLINE ZONES, LAYOUT PER DETAILS	30	NA	12" O.C.	.01
	DRIP HOSE	30	NA	12" O.C.	.01
	RAINBIRD RWS-B-C-1401	30	NA	F	.25

PRESSURE COMPENSATING DRIP EMITTER
QTY

P.O.C. POINT OF CONNECTION

C CONTROLLER

REMOTE CONTROL VALVE

ISOLATION VALVE

QUICK COUPLER

X 1" 18.0
VALVE SIZE
ZONE GPM
VALVE NO.

MAINLINE: X" SCHEDULE 40 PVC

LATERAL: SCHEDULE 40 PVC

LINE SIZE

SCHEDULE 40 PVC SLEEVES SIZE PER PLAN , 12" PAST PAVING EDGE

IRRIGATION NOTES

1. IT IS THE IRRIGATION CONTRACTOR'S RESPONSIBILITY TO COORDINATE ANY REQUIRED IRRIGATION SLEEVING WITH RESPECTIVE SUBCONTRACTORS BEFORE CONSTRUCTION BEGINS.
3. CONTRACTOR TO VERIFY AVAILABLE P.S.I. AT THE POINT OF CONNECTION BEFORE COMMENCEMENT OF INSTALLATION.
4. IT IS THE CONTRACTOR'S RESPONSIBILITY TO PROVIDE A FULLY FUNCTIONAL AUTOMATIC IRRIGATION SYSTEM PROVIDING FULL COVERAGE TO ALL PLANTING AREAS AND TREE WELLS AS DESCRIBED ON THE DRAWINGS AND IN THE SPECIFICATIONS. CONTRACTOR TO COORDINATE WITH UNIVERSITY MAINTENANCE STAFF AS TO EXISTING CONDITIONS AND SYSTEM REQUIREMENTS INCLUDING, QUICK COUPLER LOCATIONS, CONTROL VALVES, ETC..
5. THE LAYOUT OF THE IRRIGATION SYSTEM IS DIAGRAMMATIC ONLY. MODIFY LAYOUT AS REQUIRED TO ACCOMMODATE PLANT PLACEMENT, UTILITIES, AND UNDERGROUND OBSTRUCTIONS. REVIEW MODIFICATIONS WITH THE LANDSCAPE ARCHITECT PRIOR TO PROCEEDING.
6. SLEEVES SHALL BE INSTALLED 24 INCHES (MIN.) BELOW FINISHED PAVED SURFACE. ADJUST HEIGHT AS NEEDED TO ROUTE AROUND UTILITIES. EXTEND SLEEVES AT LEAST 12 INCHES INTO LAWN AND PLANTING AREAS, TYP.
7. INSTALL TRACE WIRE OVER ALL MAINLINE PIPE AND OVER CONTROL WIRE WHICH IS NOT INSTALLED IN TRENCH WITH PIPE. ROUTE FROM CONTROLLER TO ENDS OF PIPE. MAKE ALL CONNECTIONS WATER TIGHT.
8. CONTRACTOR TO SET FLAGS TO IDENTIFY PROPOSED VALVE AND VALVE BOX, QUICK COUPLER, ISOLATION VALVE, SPRINKLER LOCATIONS AND GENERAL LAYOUT OF MAIN LINES. OBTAIN LANDSCAPE ARCHITECT'S APPROVAL BEFORE EXCAVATION. PROVIDE 5 BUSINESS DAYS NOTICE TO L.A. PRIOR TO ANTICIPATED LAYOUT REVIEWS.
9. REFERENCE L301 AND L302 FOR GRADING INFORMATION
10. LOCATE VALVE BOXES SO AS TO BE HIDDEN FROM PEDESTRIAN VIEW. BROWN OR BLACK LIDS IN MULCH (PLANTING AREAS), GREEN LIDS IN LAWN AREAS.

PRELIMINARY

Mayer/Reed
Mayer/Reed, Inc.
319 SW Washington St.
Suite 820
Portland, Oregon 97204
503.223.5953

S. 1ST AND STRAND STREETS ROAD AND UTILITY EXTENSIONS
ST. HELENS, OREGON
IRRIGATION PLANS

IRRIGATION PLANS

TITLE

#	DATE	DESCRIPTION

REVISIONS

DATUM

MS — DRAWN BY
SVS — CHECKED BY

90% DESIGN
STATUS

JANUARY 10, 2021
DATE

19823
PROJECT NUMBER

L2.03

© 2021 OTAK, INC.

If this drawing is not 22" x 34", it has been reduced/enlarged. Scale accordingly.

Plotted: Jan 07, 2022 - 7:43am ssimms M:\11A PROJECTS\SHS-210142_DRAWINGS\1. CAD\4. SHEETS\L200-Irrigation Plans.dwg Layout Name: L2.03

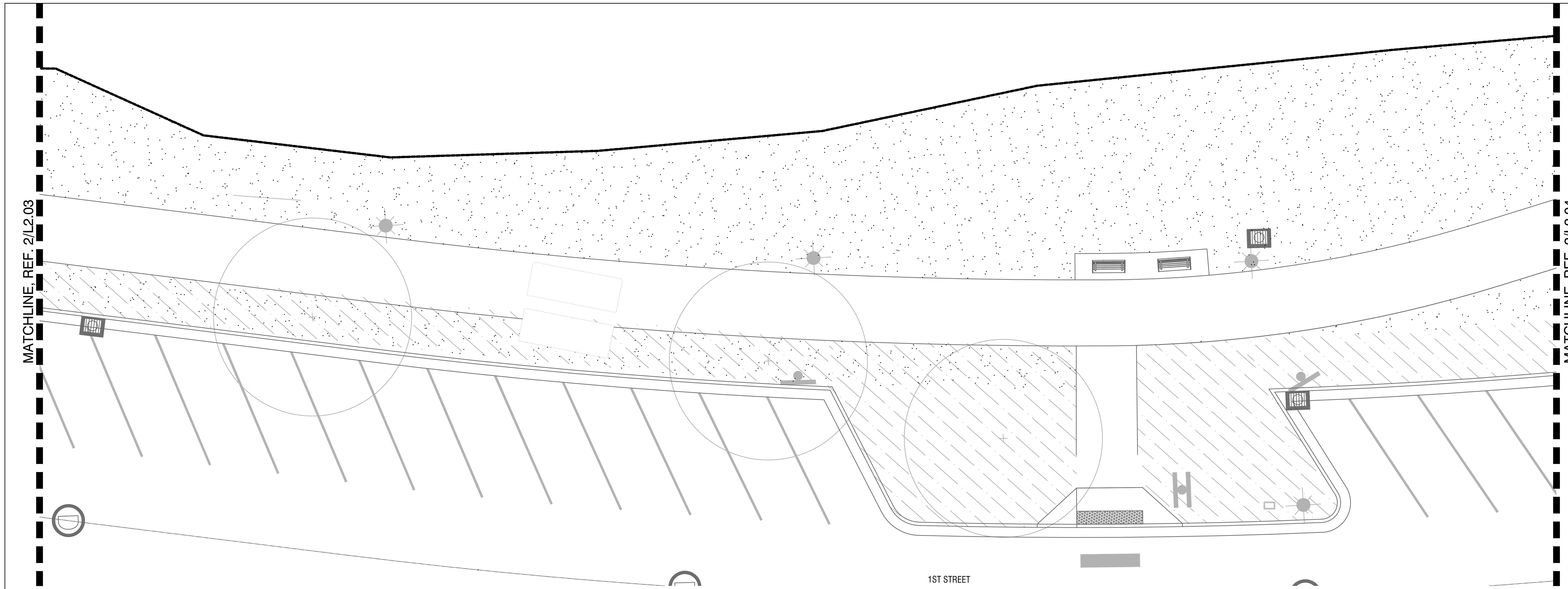

1 **IRRIGATION PLAN - 1ST STREET**
SCALE: 1"= 10'-0"

0 5' 10' 20'
N

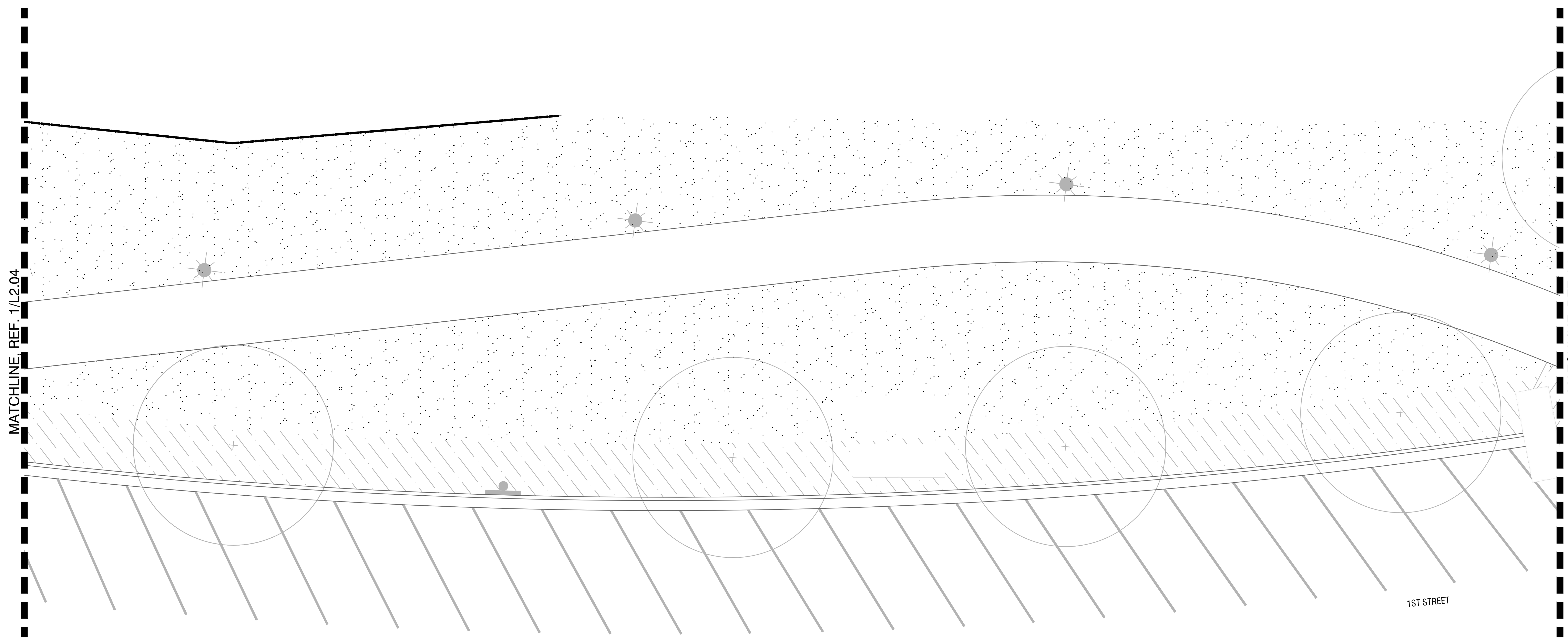

2 **IRRIGATION PLAN - 1ST STREET**
SCALE: 1"= 10'-0"

0 5' 10' 20'
N

IRRIGATION LEGEND

SYMBOL	DESCRIPTION	PSI	RADIUS	PATTERN	GPM
	RAINBIRD 1806-PRS-5	30	5'	Q, H, F	.10, .13, .41
	RAINBIRD 1806-PRS-8	30	8'	Q, H, F	.26, .52, 1.05
	RAINBIRD 1806-PRS-10	30	10'	Q, T, F	.39, .79, 1.58
	RAINBIRD 1806-PRS-12	30	12'	Q, T, F	.65, 1.30, 2.60
	RAINBIRD 1806-PRS-15	30	15'	Q, H, F	.92, 1.85, 3.7
	RAINBIRD XFS DRIPLINE ZONES, LAYOUT PER DETAILS	30	NA	12" O.C.	.01
	DRIP HOSE	30	NA	12" O.C.	.01
	RAINBIRD RWS-B-C-1401	30	NA	F	.25
3	PRESSURE COMPENSATING DRIP EMITTER QTY				

P.O.C. — POINT OF CONNECTION
C — CONTROLLER
REMOTE CONTROL VALVE
ISOLATION VALVE
QUICK COUPLER

X | 1" | 18.0 — VALVE SIZE, ZONE GPM, VALVE NO.

MAINLINE: X" SCHEDULE 40 PVC
LATERAL: SCHEDULE 40 PVC
LINE SIZE
SCHEDULE 40 PVC SLEEVES SIZE PER PLAN , 12" PAST PAVING EDGE

IRRIGATION NOTES

1. IT IS THE IRRIGATION CONTRACTOR'S RESPONSIBILITY TO COORDINATE ANY REQUIRED IRRIGATION SLEEVING WITH RESPECTIVE SUBCONTRACTORS BEFORE CONSTRUCTION BEGINS.

3. CONTRACTOR TO VERIFY AVAILABLE P.S.I. AT THE POINT OF CONNECTION BEFORE COMMENCEMENT OF INSTALLATION.

4. IT IS THE CONTRACTOR'S RESPONSIBILITY TO PROVIDE A FULLY FUNCTIONAL AUTOMATIC IRRIGATION SYSTEM PROVIDING FULL COVERAGE TO ALL PLANTING AREAS AND TREE WELLS AS DESCRIBED ON THE DRAWINGS AND IN THE SPECIFICATIONS. CONTRACTOR TO COORDINATE WITH UNIVERSITY MAINTENANCE STAFF AS TO EXISTING CONDITIONS AND SYSTEM REQUIREMENTS INCLUDING, QUICK COUPLER LOCATIONS, CONTROL VALVES, ETC..

5. THE LAYOUT OF THE IRRIGATION SYSTEM IS DIAGRAMMATIC ONLY. MODIFY LAYOUT AS REQUIRED TO ACCOMMODATE PLANT PLACEMENT, UTILITIES, AND UNDERGROUND OBSTRUCTIONS. REVIEW MODIFICATIONS WITH THE LANDSCAPE ARCHITECT PRIOR TO PROCEEDING.

6. SLEEVES SHALL BE INSTALLED 24 INCHES (MIN.) BELOW FINISHED PAVED SURFACE. ADJUST HEIGHT AS NEEDED TO ROUTE AROUND UTILITIES. EXTEND SLEEVES AT LEAST 12 INCHES INTO LAWN AND PLANTING AREAS, TYP.

7. INSTALL TRACE WIRE OVER ALL MAINLINE PIPE AND OVER CONTROL WIRE WHICH IS NOT INSTALLED IN TRENCH WITH PIPE. ROUTE FROM CONTROLLER TO ENDS OF PIPE. MAKE ALL CONNECTIONS WATER TIGHT.

8. CONTRACTOR TO SET FLAGS TO IDENTIFY PROPOSED VALVE AND VALVE BOX, QUICK COUPLER, ISOLATION VALVE, SPRINKLER LOCATIONS AND GENERAL LAYOUT OF MAIN LINES. OBTAIN LANDSCAPE ARCHITECT'S APPROVAL BEFORE EXCAVATION. PROVIDE 5 BUSINESS DAYS NOTICE TO L.A. PRIOR TO ANTICIPATED LAYOUT REVIEWS.

9. REFERENCE L301 AND L302 FOR GRADING INFORMATION

10. LOCATE VALVE BOXES SO AS TO BE HIDDEN FROM PEDESTRIAN VIEW. BROWN OR BLACK LIDS IN MULCH (PLANTING AREAS), GREEN LIDS IN LAWN AREAS.

City of St. Helens
FOUNDED 1850

PRELIMINARY

Mayer/Reed

Mayer/Reed, Inc.
319 SW Washington St.
Suite 820
Portland, Oregon 97204
503.223.5953

S. 1ST AND STRAND STREETS ROAD AND UTILITY EXTENSIONS

ST. HELENS, OREGON
IRRIGATION PLANS

IRRIGATION PLANS

TITLE

#	DATE	DESCRIPTION

REVISIONS

DATUM

MS — DRAWN BY
SVS — CHECKED BY

90% DESIGN — STATUS

JANUARY 10, 2021 — DATE

19823 — PROJECT NUMBER

L2.04

© 2021 OTAK, INC.

If this drawing is not 22" x 34", it has been reduced/enlarged. Scale accordingly.

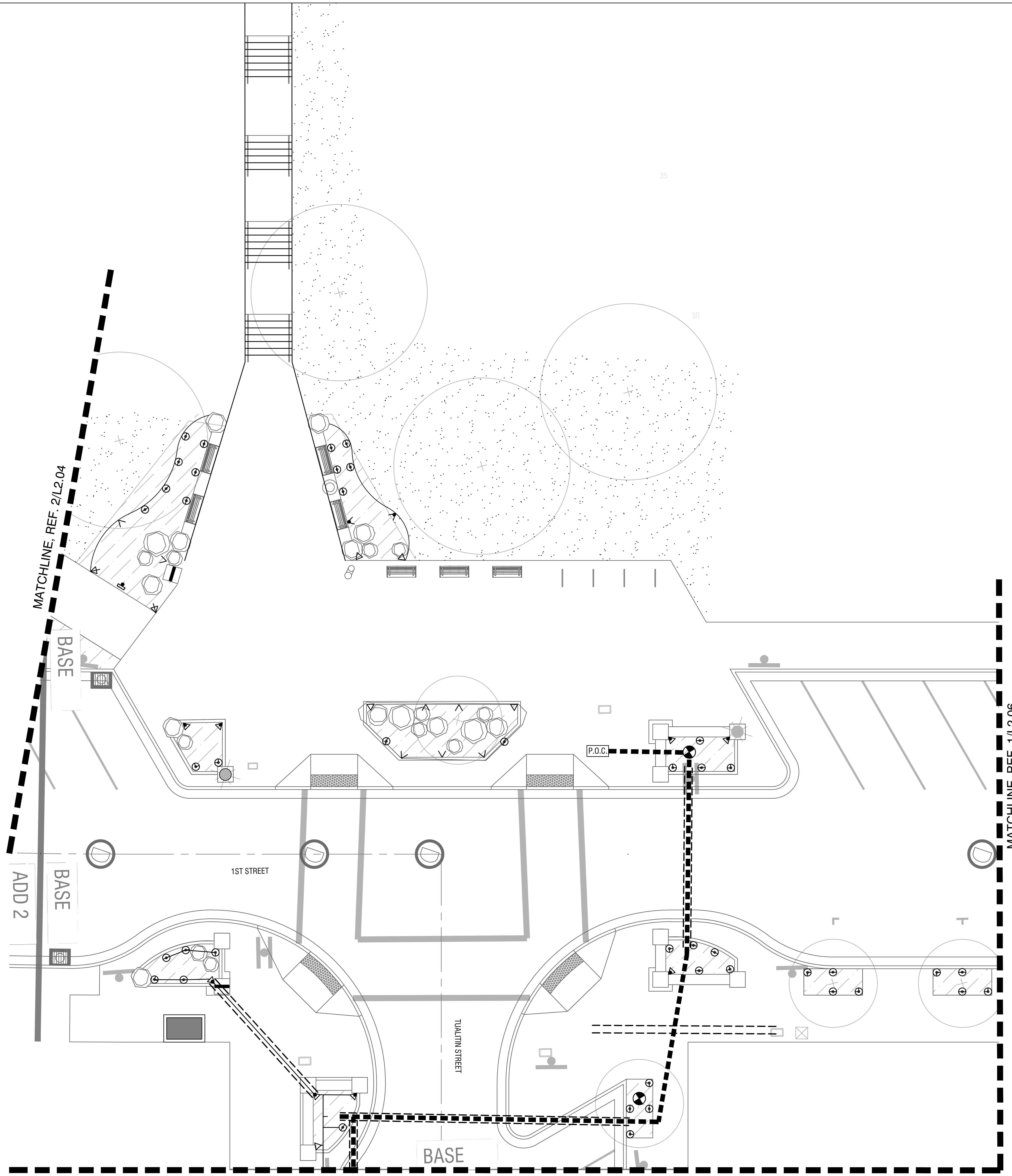

1 IRRIGATION PLAN - BLUFF TRAIL NORTH TERMINUS
SCALE: 1"= 10'-0"

0 5' 10' 20' N

IRRIGATION LEGEND

SYMBOL	DESCRIPTION	PSI	RADIUS	PATTERN	GPM
	RAINBIRD 1806-PRS-5	30	5'	Q, H, F	.10, .13, .41
	RAINBIRD 1806-PRS-8	30	8'	Q, H, F	.26, .52, 1.05
	RAINBIRD 1806-PRS-10	30	10'	Q, T, F	.39, .79, 1.58
	RAINBIRD 1806-PRS-12	30	12'	Q, T, F	.65, 1.30, 2.60
	RAINBIRD 1806-PRS-15	30	15'	Q, H, F	.92, 1.85, 3.7
	RAINBIRD XFS DRIPLINE ZONES, LAYOUT PER DETAILS	30	NA	12" O.C.	.01
	DRIP HOSE	30	NA	12" O.C.	.01
	RAINBIRD RWS-B-C-1401	30	NA	F	.25
3	PRESSURE COMPENSATING DRIP EMITTER QTY				

P.O.C. POINT OF CONNECTION
C CONTROLLER

REMOTE CONTROL VALVE
ISOLATION VALVE
QUICK COUPLER

X 1" 18.0 — VALVE SIZE, ZONE GPM, VALVE NO.

MAINLINE: X" SCHEDULE 40 PVC
LATERAL: SCHEDULE 40 PVC — LINE SIZE
SCHEDULE 40 PVC SLEEVES SIZE PER PLAN , 12" PAST PAVING EDGE

IRRIGATION NOTES

1. IT IS THE IRRIGATION CONTRACTOR'S RESPONSIBILITY TO COORDINATE ANY REQUIRED IRRIGATION SLEEVING WITH RESPECTIVE SUBCONTRACTORS BEFORE CONSTRUCTION BEGINS.
3. CONTRACTOR TO VERIFY AVAILABLE P.S.I. AT THE POINT OF CONNECTION BEFORE COMMENCEMENT OF INSTALLATION.
4. IT IS THE CONTRACTOR'S RESPONSIBILITY TO PROVIDE A FULLY FUNCTIONAL AUTOMATIC IRRIGATION SYSTEM PROVIDING FULL COVERAGE TO ALL PLANTING AREAS AND TREE WELLS AS DESCRIBED ON THE DRAWINGS AND IN THE SPECIFICATIONS. CONTRACTOR TO COORDINATE WITH UNIVERSITY MAINTENANCE STAFF AS TO EXISTING CONDITIONS AND SYSTEM REQUIREMENTS INCLUDING, QUICK COUPLER LOCATIONS, CONTROL VALVES, ETC..
5. THE LAYOUT OF THE IRRIGATION SYSTEM IS DIAGRAMMATIC ONLY. MODIFY LAYOUT AS REQUIRED TO ACCOMMODATE PLANT PLACEMENT, UTILITIES, AND UNDERGROUND OBSTRUCTIONS. REVIEW MODIFICATIONS WITH THE LANDSCAPE ARCHITECT PRIOR TO PROCEEDING.
6. SLEEVES SHALL BE INSTALLED 24 INCHES (MIN.) BELOW FINISHED PAVED SURFACE. ADJUST HEIGHT AS NEEDED TO ROUTE AROUND UTILITIES. EXTEND SLEEVES AT LEAST 12 INCHES INTO LAWN AND PLANTING AREAS, TYP.
7. INSTALL TRACE WIRE OVER ALL MAINLINE PIPE AND OVER CONTROL WIRE WHICH IS NOT INSTALLED IN TRENCH WITH PIPE. ROUTE FROM CONTROLLER TO ENDS OF PIPE. MAKE ALL CONNECTIONS WATER TIGHT.
8. CONTRACTOR TO SET FLAGS TO IDENTIFY PROPOSED VALVE AND VALVE BOX, QUICK COUPLER, ISOLATION VALVE, SPRINKLER LOCATIONS AND GENERAL LAYOUT OF MAIN LINES. OBTAIN LANDSCAPE ARCHITECT'S APPROVAL BEFORE EXCAVATION. PROVIDE 5 BUSINESS DAYS NOTICE TO L.A. PRIOR TO ANTICIPATED LAYOUT REVIEWS.
9. REFERENCE L301 AND L302 FOR GRADING INFORMATION
10. LOCATE VALVE BOXES SO AS TO BE HIDDEN FROM PEDESTRIAN VIEW. BROWN OR BLACK LIDS IN MULCH (PLANTING AREAS), GREEN LIDS IN LAWN AREAS.

City of St. Helens FOUNDED 1850

PRELIMINARY

Mayer/Reed

Mayer/Reed, Inc.
319 SW Washington St.
Suite 820
Portland, Oregon 97204
503.223.5953

S. 1ST AND STRAND STREETS ROAD AND UTILITY EXTENSIONS

ST. HELENS, OREGON
IRRIGATION PLANS

IRRIGATION PLANS

TITLE

#	DATE	DESCRIPTION

REVISIONS

DATUM

MS — DRAWN BY
SVS — CHECKED BY

90% DESIGN — STATUS

JANUARY 10, 2021 — DATE

19823 — PROJECT NUMBER

L2.05

© 2021 OTAK, INC.

If this drawing is not 22" x 34", it has been reduced/enlarged. Scale accordingly.

Plotted: Jan 07, 2022 - 7:43pm ssimms M:\1 LA PROJECTS\SHS-210142. DRAWINGS\1. CAD\4. SHEETS\L200-Irrigation Plans.dwg Layout Name: L2.05

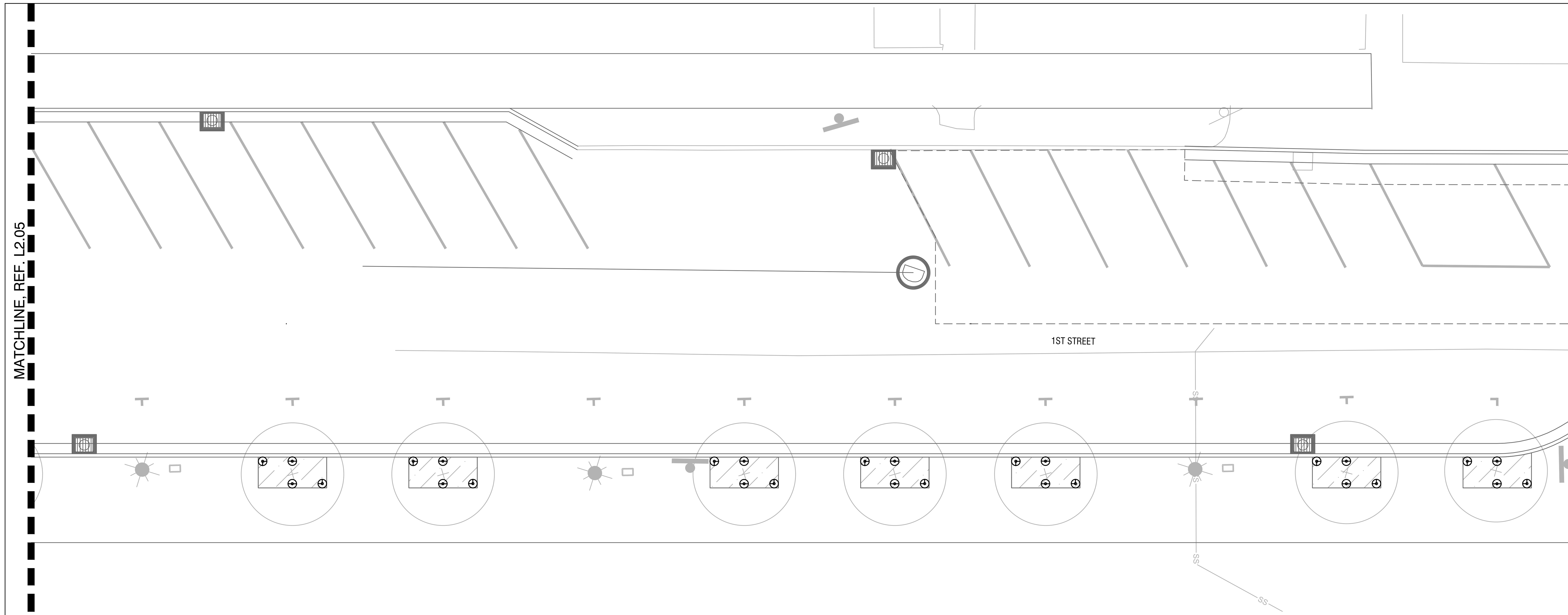

1 IRRIGATION PLAN - 1ST STREET
SCALE: 1" = 10'-0"

0 5' 10' 20'

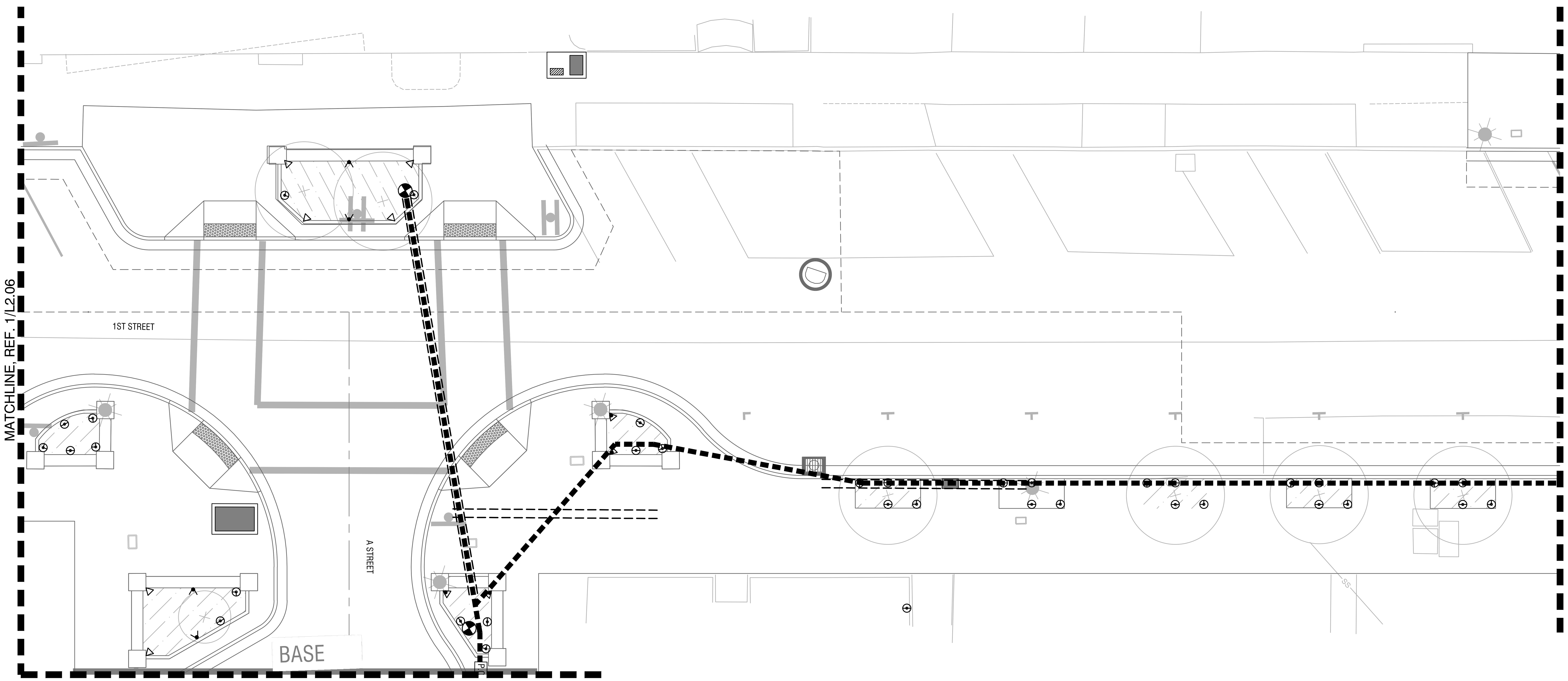

2 IRRIGATION PLAN - 1ST STREET & A STREET
SCALE: 1" = 10'-0"

IRRIGATION LEGEND

SYMBOL	DESCRIPTION	PSI	RADIUS	PATTERN	GPM
	RAINBIRD 1806-PRS-5	30	5'	Q, H, F	.10, .13, .41
	RAINBIRD 1806-PRS-8	30	8'	Q, H, F	.26, .52, 1.05
	RAINBIRD 1806-PRS-10	30	10'	Q, T, F	.39, .79, 1.58
	RAINBIRD 1806-PRS-12	30	12'	Q, T, F	.65, 1.30, 2.60
	RAINBIRD 1806-PRS-15	30	15'	Q, H, F	.92, 1.85, 3.7
	RAINBIRD XFS DRIPLINE ZONES, LAYOUT PER DETAILS	30	NA	12" O.C.	.01
	DRIP HOSE	30	NA	12" O.C.	.01
	RAINBIRD RWS-B-C-1401	30	NA	F	.25

3 — PRESSURE COMPENSATING DRIP EMITTER QTY

P.O.C. — POINT OF CONNECTION
C — CONTROLLER

X / 1" / 18.0 — VALVE SIZE, ZONE GPM, VALVE NO.

REMOTE CONTROL VALVE
ISOLATION VALVE
QUICK COUPLER

MAINLINE: X" SCHEDULE 40 PVC
LATERAL: SCHEDULE 40 PVC (LINE SIZE)
SCHEDULE 40 PVC SLEEVES SIZE PER PLAN , 12" PAST PAVING EDGE

IRRIGATION NOTES

1. IT IS THE IRRIGATION CONTRACTOR'S RESPONSIBILITY TO COORDINATE ANY REQUIRED IRRIGATION SLEEVING WITH RESPECTIVE SUBCONTRACTORS BEFORE CONSTRUCTION BEGINS.
3. CONTRACTOR TO VERIFY AVAILABLE P.S.I. AT THE POINT OF CONNECTION BEFORE COMMENCEMENT OF INSTALLATION.
4. IT IS THE CONTRACTOR'S RESPONSIBILITY TO PROVIDE A FULLY FUNCTIONAL AUTOMATIC IRRIGATION SYSTEM PROVIDING FULL COVERAGE TO ALL PLANTING AREAS AND TREE WELLS AS DESCRIBED ON THE DRAWINGS AND IN THE SPECIFICATIONS. CONTRACTOR TO COORDINATE WITH UNIVERSITY MAINTENANCE STAFF AS TO EXISTING CONDITIONS AND SYSTEM REQUIREMENTS INCLUDING, QUICK COUPLER LOCATIONS, CONTROL VALVES, ETC..
5. THE LAYOUT OF THE IRRIGATION SYSTEM IS DIAGRAMMATIC ONLY. MODIFY LAYOUT AS REQUIRED TO ACCOMMODATE PLANT PLACEMENT, UTILITIES, AND UNDERGROUND OBSTRUCTIONS. REVIEW MODIFICATIONS WITH THE LANDSCAPE ARCHITECT PRIOR TO PROCEEDING.
6. SLEEVES SHALL BE INSTALLED 24 INCHES (MIN.) BELOW FINISHED PAVED SURFACE. ADJUST HEIGHT AS NEEDED TO ROUTE AROUND UTILITIES. EXTEND SLEEVES AT LEAST 12 INCHES INTO LAWN AND PLANTING AREAS, TYP.
7. INSTALL TRACE WIRE OVER ALL MAINLINE PIPE AND OVER CONTROL WIRE WHICH IS NOT INSTALLED IN TRENCH WITH PIPE. ROUTE FROM CONTROLLER TO ENDS OF PIPE. MAKE ALL CONNECTIONS WATER TIGHT.
8. CONTRACTOR TO SET FLAGS TO IDENTIFY PROPOSED VALVE AND VALVE BOX, QUICK COUPLER, ISOLATION VALVE, SPRINKLER LOCATIONS AND GENERAL LAYOUT OF MAIN LINES. OBTAIN LANDSCAPE ARCHITECT'S APPROVAL BEFORE EXCAVATION. PROVIDE 5 BUSINESS DAYS NOTICE TO L.A. PRIOR TO ANTICIPATED LAYOUT REVIEWS.
9. REFERENCE L301 AND L302 FOR GRADING INFORMATION
10. LOCATE VALVE BOXES SO AS TO BE HIDDEN FROM PEDESTRIAN VIEW. BROWN OR BLACK LIDS IN MULCH (PLANTING AREAS), GREEN LIDS IN LAWN AREAS.

PRELIMINARY

Mayer/Reed
Mayer/Reed, Inc.
319 SW Washington St.
Suite 820
Portland, Oregon 97204
503.223.5953

S. 1ST AND STRAND STREETS ROAD AND UTILITY EXTENSIONS
ST. HELENS, OREGON
IRRIGATION PLANS

IRRIGATION PLANS
TITLE

#	DATE	DESCRIPTION

REVISIONS

DATUM

MS — DRAWN BY
SVS — CHECKED BY

90% DESIGN — STATUS

JANUARY 10, 2021 — DATE

19823 — PROJECT NUMBER

L2.06

© 2021 OTAK, INC.

If this drawing is not 22" x 34", it has been reduced/enlarged. Scale accordingly.

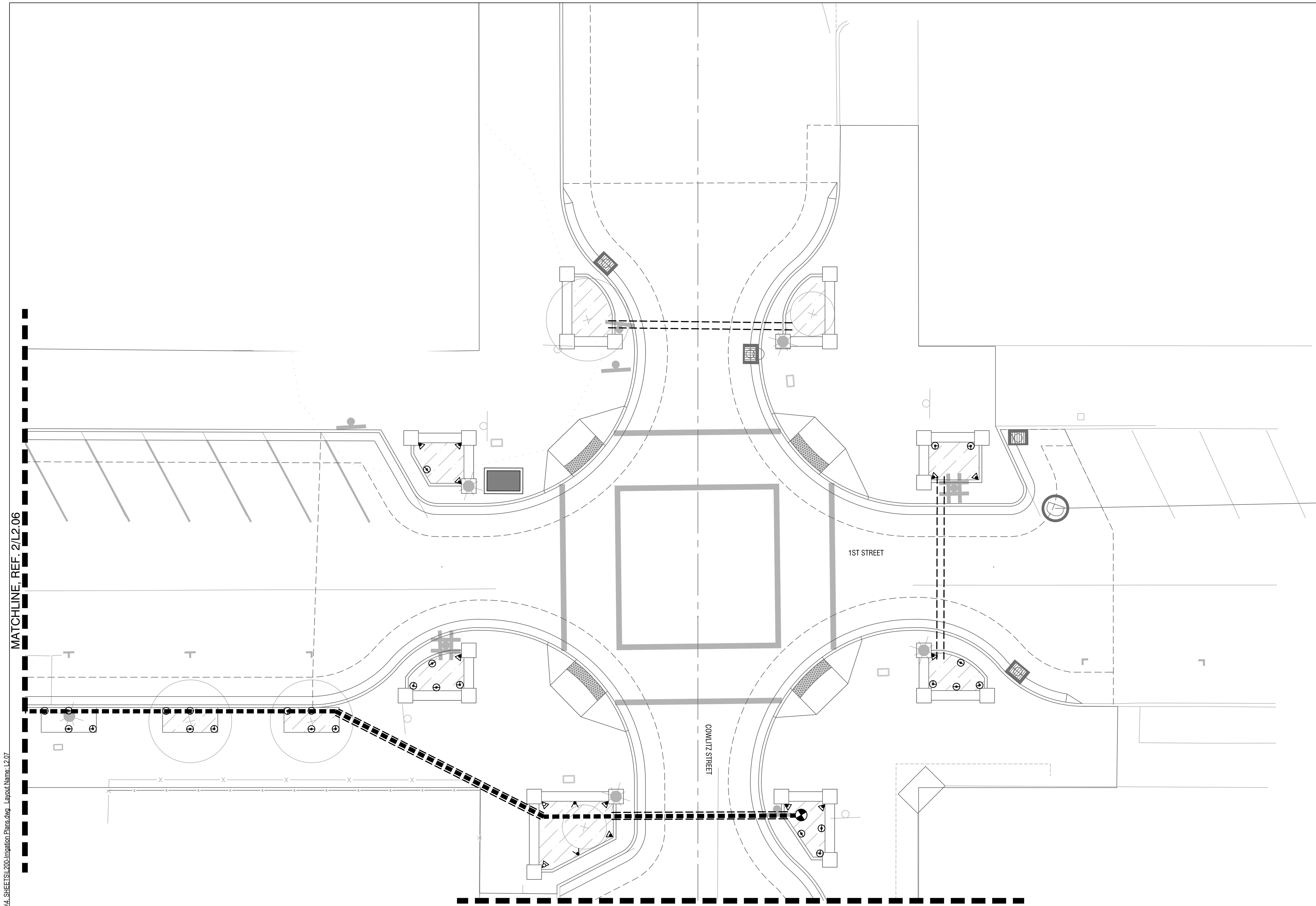

1 IRRIGATION PLAN - 1ST STREET & COWLITZ STREET

SCALE: 1" = 10'-0"

0 5' 10' 20'

N

IRRIGATION LEGEND

SYMBOL	DESCRIPTION	PSI	RADIUS	PATTERN	GPM
	RAINBIRD 1806-PRS-5	30	5'	Q, H, F	.10, .13, .41
	RAINBIRD 1806-PRS-8	30	8'	Q, H, F	.26, .52, 1.05
	RAINBIRD 1806-PRS-10	30	10'	Q, T, F	.39, .79, 1.58
	RAINBIRD 1806-PRS-12	30	12'	Q, T, F	.65, 1.30, 2.60
	RAINBIRD 1806-PRS-15	30	15'	Q, H, F	.92, 1.85, 3.7
	RAINBIRD XFS DRIPLINE ZONES, LAYOUT PER DETAILS	30	NA	12" O.C.	.01
	DRIP HOSE	30	NA	12" O.C.	.01
	RAINBIRD RWS-B-C-1401	30	NA	F	.25
3	PRESSURE COMPENSATING DRIP EMITTER QTY				

- P.O.C. — POINT OF CONNECTION
- C — CONTROLLER
- REMOTE CONTROL VALVE
- ISOLATION VALVE
- QUICK COUPLER

X / 1" / 18.0 — VALVE SIZE, ZONE GPM, VALVE NO.

- MAINLINE: X" SCHEDULE 40 PVC
- LATERAL: SCHEDULE 40 PVC (LINE SIZE)
- SCHEDULE 40 PVC SLEEVES SIZE PER PLAN , 12" PAST PAVING EDGE

IRRIGATION NOTES

1. IT IS THE IRRIGATION CONTRACTOR'S RESPONSIBILITY TO COORDINATE ANY REQUIRED IRRIGATION SLEEVING WITH RESPECTIVE SUBCONTRACTORS BEFORE CONSTRUCTION BEGINS.

3. CONTRACTOR TO VERIFY AVAILABLE P.S.I. AT THE POINT OF CONNECTION BEFORE COMMENCEMENT OF INSTALLATION.

4. IT IS THE CONTRACTOR'S RESPONSIBILITY TO PROVIDE A FULLY FUNCTIONAL AUTOMATIC IRRIGATION SYSTEM PROVIDING FULL COVERAGE TO ALL PLANTING AREAS AND TREE WELLS AS DESCRIBED ON THE DRAWINGS AND IN THE SPECIFICATIONS. CONTRACTOR TO COORDINATE WITH UNIVERSITY MAINTENANCE STAFF AS TO EXISTING CONDITIONS AND SYSTEM REQUIREMENTS INCLUDING, QUICK COUPLER LOCATIONS, CONTROL VALVES, ETC..

5. THE LAYOUT OF THE IRRIGATION SYSTEM IS DIAGRAMMATIC ONLY. MODIFY LAYOUT AS REQUIRED TO ACCOMMODATE PLANT PLACEMENT, UTILITIES, AND UNDERGROUND OBSTRUCTIONS. REVIEW MODIFICATIONS WITH THE LANDSCAPE ARCHITECT PRIOR TO PROCEEDING.

6. SLEEVES SHALL BE INSTALLED 24 INCHES (MIN.) BELOW FINISHED PAVED SURFACE. ADJUST HEIGHT AS NEEDED TO ROUTE AROUND UTILITIES. EXTEND SLEEVES AT LEAST 12 INCHES INTO LAWN AND PLANTING AREAS, TYP.

7. INSTALL TRACE WIRE OVER ALL MAINLINE PIPE AND OVER CONTROL WIRE WHICH IS NOT INSTALLED IN TRENCH WITH PIPE. ROUTE FROM CONTROLLER TO ENDS OF PIPE. MAKE ALL CONNECTIONS WATER TIGHT.

8. CONTRACTOR TO SET FLAGS TO IDENTIFY PROPOSED VALVE AND VALVE BOX, QUICK COUPLER, ISOLATION VALVE, SPRINKLER LOCATIONS AND GENERAL LAYOUT OF MAIN LINES. OBTAIN LANDSCAPE ARCHITECT'S APPROVAL BEFORE EXCAVATION. PROVIDE 5 BUSINESS DAYS NOTICE TO L.A. PRIOR TO ANTICIPATED LAYOUT REVIEWS.

9. REFERENCE L301 AND L302 FOR GRADING INFORMATION

10. LOCATE VALVE BOXES SO AS TO BE HIDDEN FROM PEDESTRIAN VIEW. BROWN OR BLACK LIDS IN MULCH (PLANTING AREAS), GREEN LIDS IN LAWN AREAS.

City of St. Helens

PRELIMINARY

Mayer/Reed

Mayer/Reed, Inc.
319 SW Washington St.
Suite 820
Portland, Oregon 97204
503.223.5953

S. 1ST AND STRAND STREETS ROAD AND UTILITY EXTENSIONS

ST. HELENS, OREGON
IRRIGATION PLANS

IRRIGATION PLANS

TITLE

#	DATE	DESCRIPTION

REVISIONS

DATUM

MS — DRAWN BY; SVS — CHECKED BY

90% DESIGN — STATUS

JANUARY 10, 2021 — DATE

19823 — PROJECT NUMBER

L2.07

© 2021 OTAK, INC.

If this drawing is not 22" x 34", it has been reduced/enlarged. Scale accordingly.

Plotted: Jan 07, 2022 - 7:44pm ssimms M:\1 LA PROJECTS\SHS-21014\2. DRAWINGS\1. CAD\4. SHEETS\L200-Irrigation Plans.dwg Layout Name: L2.08

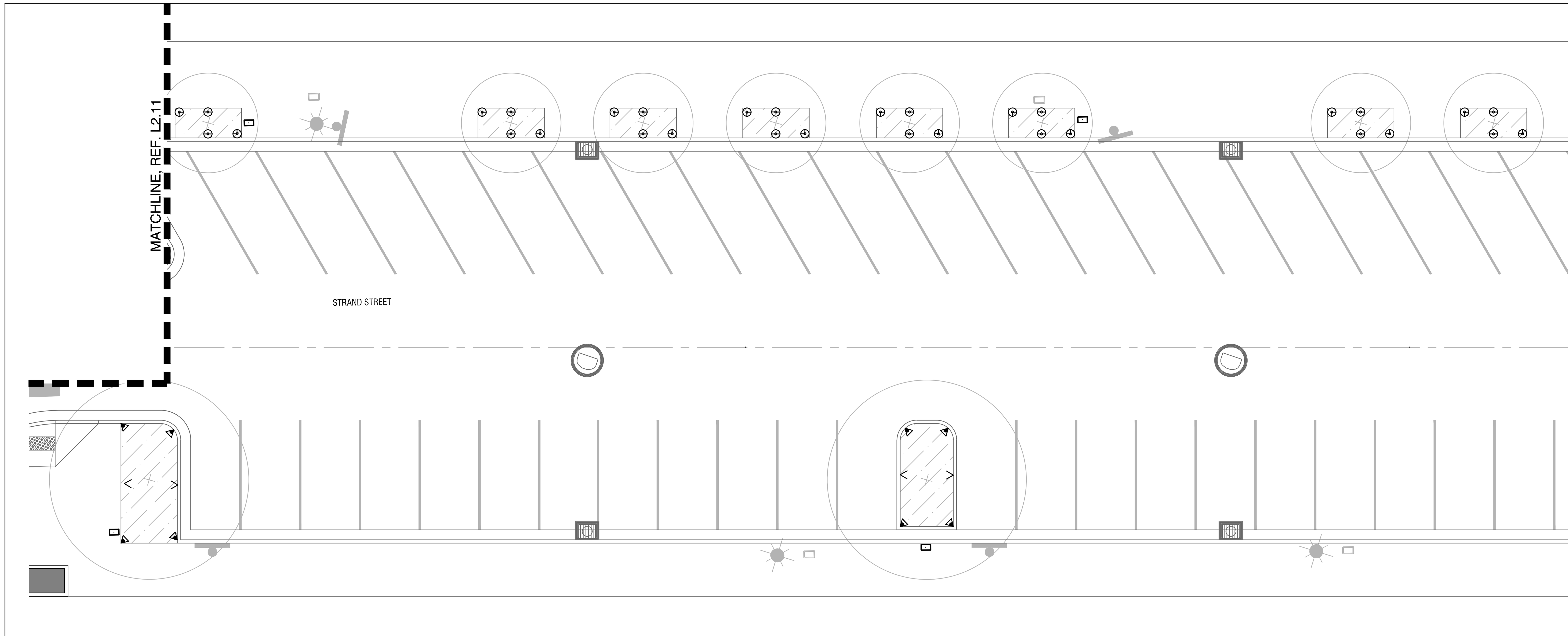

1 **IRRIGATION PLAN - STRAND STREET**
SCALE: 1"= 10'-0"

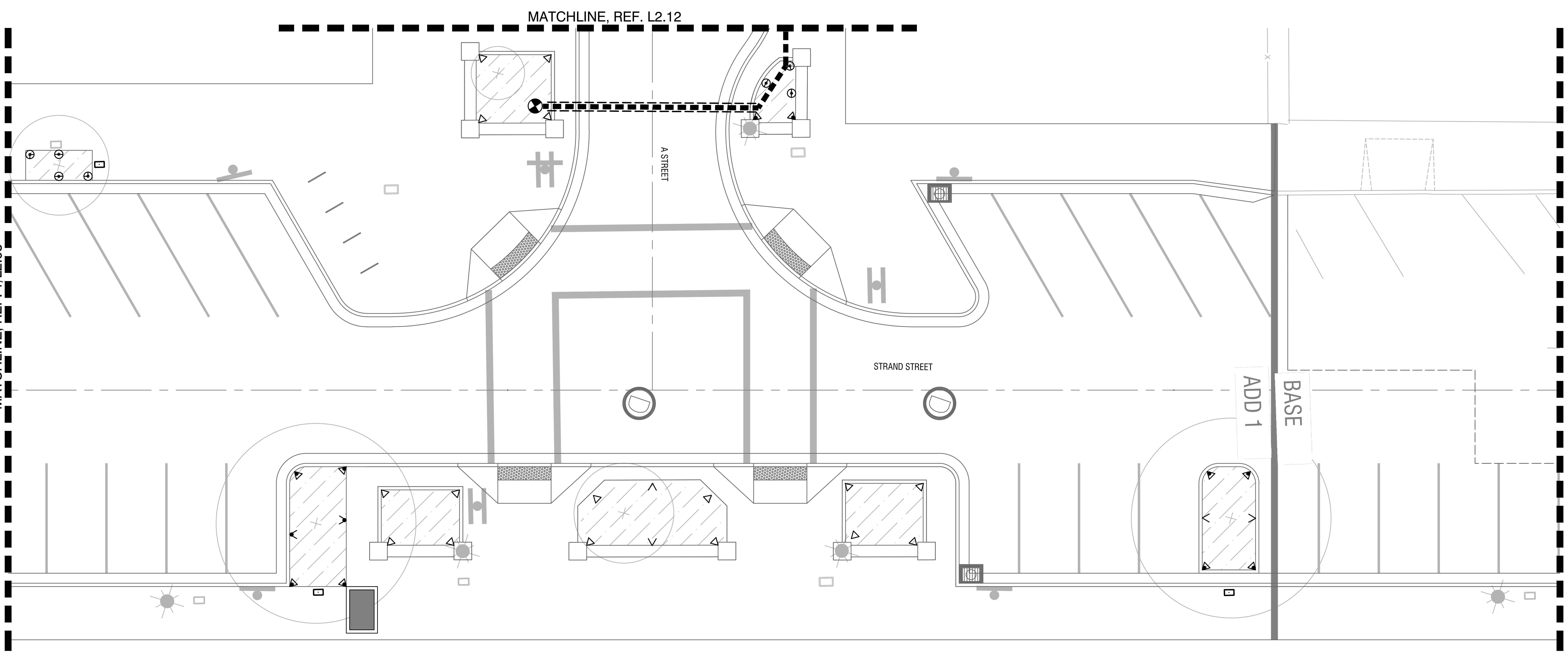

2 **IRRIGATION PLAN - STRAND STREET & A STREET**
SCALE: 1"= 10'-0"

IRRIGATION LEGEND

SYMBOL	DESCRIPTION	PSI	RADIUS	PATTERN	GPM
	RAINBIRD 1806-PRS-5	30	5'	Q, H, F	.10, .13, .41
	RAINBIRD 1806-PRS-8	30	8'	Q, H, F	.26, .52, 1.05
	RAINBIRD 1806-PRS-10	30	10'	Q, T, F	.39, .79, 1.58
	RAINBIRD 1806-PRS-12	30	12'	Q, T, F	.65, 1.30, 2.60
	RAINBIRD 1806-PRS-15	30	15'	Q, H, F	.92, 1.85, 3.7
	RAINBIRD XFS DRIPLINE ZONES, LAYOUT PER DETAILS	30	NA	12" O.C.	.01
	DRIP HOSE	30	NA	12" O.C.	.01
	RAINBIRD RWS-B-C-1401	30	NA	F	.25

3 — PRESSURE COMPENSATING DRIP EMITTER QTY

P.O.C. — POINT OF CONNECTION
C — CONTROLLER

X | 1" | 18.0 — VALVE SIZE, ZONE GPM, VALVE NO.

REMOTE CONTROL VALVE
ISOLATION VALVE
QUICK COUPLER

MAINLINE: X" SCHEDULE 40 PVC
LATERAL: SCHEDULE 40 PVC
LINE SIZE
SCHEDULE 40 PVC SLEEVES SIZE PER PLAN , 12" PAST PAVING EDGE

IRRIGATION NOTES

1. IT IS THE IRRIGATION CONTRACTOR'S RESPONSIBILITY TO COORDINATE ANY REQUIRED IRRIGATION SLEEVING WITH RESPECTIVE SUBCONTRACTORS BEFORE CONSTRUCTION BEGINS.
3. CONTRACTOR TO VERIFY AVAILABLE P.S.I. AT THE POINT OF CONNECTION BEFORE COMMENCEMENT OF INSTALLATION.
4. IT IS THE CONTRACTOR'S RESPONSIBILITY TO PROVIDE A FULLY FUNCTIONAL AUTOMATIC IRRIGATION SYSTEM PROVIDING FULL COVERAGE TO ALL PLANTING AREAS AND TREE WELLS AS DESCRIBED ON THE DRAWINGS AND IN THE SPECIFICATIONS. CONTRACTOR TO COORDINATE WITH UNIVERSITY MAINTENANCE STAFF AS TO EXISTING CONDITIONS AND SYSTEM REQUIREMENTS INCLUDING, QUICK COUPLER LOCATIONS, CONTROL VALVES, ETC..
5. THE LAYOUT OF THE IRRIGATION SYSTEM IS DIAGRAMMATIC ONLY. MODIFY LAYOUT AS REQUIRED TO ACCOMMODATE PLANT PLACEMENT, UTILITIES, AND UNDERGROUND OBSTRUCTIONS. REVIEW MODIFICATIONS WITH THE LANDSCAPE ARCHITECT PRIOR TO PROCEEDING.
6. SLEEVES SHALL BE INSTALLED 24 INCHES (MIN.) BELOW FINISHED PAVED SURFACE. ADJUST HEIGHT AS NEEDED TO ROUTE AROUND UTILITIES. EXTEND SLEEVES AT LEAST 12 INCHES INTO LAWN AND PLANTING AREAS, TYP.
7. INSTALL TRACE WIRE OVER ALL MAINLINE PIPE AND OVER CONTROL WIRE WHICH IS NOT INSTALLED IN TRENCH WITH PIPE. ROUTE FROM CONTROLLER TO ENDS OF PIPE. MAKE ALL CONNECTIONS WATER TIGHT.
8. CONTRACTOR TO SET FLAGS TO IDENTIFY PROPOSED VALVE AND VALVE BOX, QUICK COUPLER, ISOLATION VALVE, SPRINKLER LOCATIONS AND GENERAL LAYOUT OF MAIN LINES. OBTAIN LANDSCAPE ARCHITECT'S APPROVAL BEFORE EXCAVATION. PROVIDE 5 BUSINESS DAYS NOTICE TO L.A. PRIOR TO ANTICIPATED LAYOUT REVIEWS.
9. REFERENCE L301 AND L302 FOR GRADING INFORMATION
10. LOCATE VALVE BOXES SO AS TO BE HIDDEN FROM PEDESTRIAN VIEW. BROWN OR BLACK LIDS IN MULCH (PLANTING AREAS), GREEN LIDS IN LAWN AREAS.

City of St. Helens — FOUNDED 1850

PRELIMINARY

Mayer/Reed
Mayer/Reed, Inc.
319 SW Washington St.
Suite 820
Portland, Oregon 97204
503.223.5953

S. 1ST AND STRAND STREETS ROAD AND UTILITY EXTENSIONS
ST. HELENS, OREGON
IRRIGATION PLANS

IRRIGATION PLANS

TITLE

#	DATE	DESCRIPTION

REVISIONS

DATUM
MS — DRAWN BY
SVS — CHECKED BY
90% DESIGN — STATUS
JANUARY 10, 2021 — DATE
19823 — PROJECT NUMBER

L2.08

© 2021 OTAK, INC.
If this drawing is not 22" x 34", it has been reduced/enlarged. Scale accordingly.

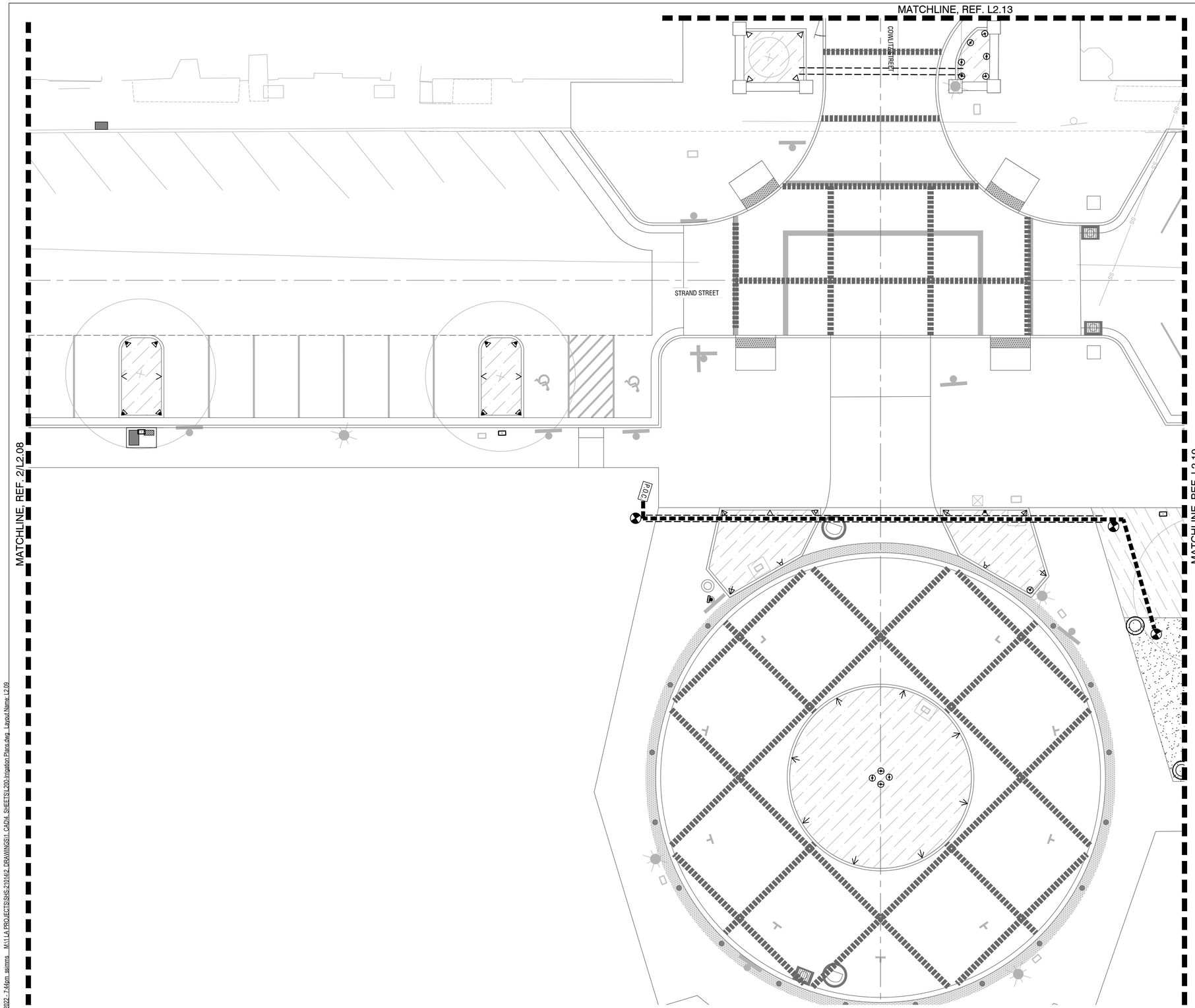

1 **IRRIGATION PLAN - STRAND STREET & COWLITZ STREET**
SCALE: 1"= 10'-0"

0 5' 10' 20'

N

IRRIGATION LEGEND

SYMBOL	DESCRIPTION	PSI	RADIUS	PATTERN	GPM
	RAINBIRD 1806-PRS-5	30	5'	Q, H, F	.10, .13, .41
	RAINBIRD 1806-PRS-8	30	8'	Q, H, F	.26, .52, 1.05
	RAINBIRD 1806-PRS-10	30	10'	Q, T, F	.39, .79, 1.58
	RAINBIRD 1806-PRS-12	30	12'	Q, T, F	.65, 1.30, 2.60
	RAINBIRD 1806-PRS-15	30	15'	Q, H, F	.92, 1.85, 3.7
	RAINBIRD XFS DRIPLINE ZONES, LAYOUT PER DETAILS	30	NA	12" O.C.	.01
	DRIP HOSE	30	NA	12" O.C.	.01
	RAINBIRD RWS-B-C-1401 PRESSURE COMPENSATING DRIP EMITTER	30	NA	F	.25
3	QTY				

P.O.C. POINT OF CONNECTION

C CONTROLLER

REMOTE CONTROL VALVE

ISOLATION VALVE

QUICK COUPLER

X 1" 18.0 — VALVE SIZE / ZONE GPM / VALVE NO.

MAINLINE: X" SCHEDULE 40 PVC

LATERAL: SCHEDULE 40 PVC

LINE SIZE

SCHEDULE 40 PVC SLEEVES SIZE PER PLAN , 12" PAST PAVING EDGE

IRRIGATION NOTES

1. IT IS THE IRRIGATION CONTRACTOR'S RESPONSIBILITY TO COORDINATE ANY REQUIRED IRRIGATION SLEEVING WITH RESPECTIVE SUBCONTRACTORS BEFORE CONSTRUCTION BEGINS.
3. CONTRACTOR TO VERIFY AVAILABLE P.S.I. AT THE POINT OF CONNECTION BEFORE COMMENCEMENT OF INSTALLATION.
4. IT IS THE CONTRACTOR'S RESPONSIBILITY TO PROVIDE A FULLY FUNCTIONAL AUTOMATIC IRRIGATION SYSTEM PROVIDING FULL COVERAGE TO ALL PLANTING AREAS AND TREE WELLS AS DESCRIBED ON THE DRAWINGS AND IN THE SPECIFICATIONS. CONTRACTOR TO COORDINATE WITH UNIVERSITY MAINTENANCE STAFF AS TO EXISTING CONDITIONS AND SYSTEM REQUIREMENTS INCLUDING, QUICK COUPLER LOCATIONS, CONTROL VALVES, ETC..
5. THE LAYOUT OF THE IRRIGATION SYSTEM IS DIAGRAMMATIC ONLY. MODIFY LAYOUT AS REQUIRED TO ACCOMMODATE PLANT PLACEMENT, UTILITIES, AND UNDERGROUND OBSTRUCTIONS. REVIEW MODIFICATIONS WITH THE LANDSCAPE ARCHITECT PRIOR TO PROCEEDING.
6. SLEEVES SHALL BE INSTALLED 24 INCHES (MIN.) BELOW FINISHED PAVED SURFACE. ADJUST HEIGHT AS NEEDED TO ROUTE AROUND UTILITIES. EXTEND SLEEVES AT LEAST 12 INCHES INTO LAWN AND PLANTING AREAS, TYP.
7. INSTALL TRACE WIRE OVER ALL MAINLINE PIPE AND OVER CONTROL WIRE WHICH IS NOT INSTALLED IN TRENCH WITH PIPE. ROUTE FROM CONTROLLER TO ENDS OF PIPE. MAKE ALL CONNECTIONS WATER TIGHT.
8. CONTRACTOR TO SET FLAGS TO IDENTIFY PROPOSED VALVE AND VALVE BOX, QUICK COUPLER, ISOLATION VALVE, SPRINKLER LOCATIONS AND GENERAL LAYOUT OF MAIN LINES. OBTAIN LANDSCAPE ARCHITECT'S APPROVAL BEFORE EXCAVATION. PROVIDE 5 BUSINESS DAYS NOTICE TO L.A. PRIOR TO ANTICIPATED LAYOUT REVIEWS.
9. REFERENCE L301 AND L302 FOR GRADING INFORMATION
10. LOCATE VALVE BOXES SO AS TO BE HIDDEN FROM PEDESTRIAN VIEW. BROWN OR BLACK LIDS IN MULCH (PLANTING AREAS), GREEN LIDS IN LAWN AREAS.

City of St. Helens
FOUNDED 1850

PRELIMINARY

Mayer/Reed

Mayer/Reed, Inc.
319 SW Washington St.
Suite 820
Portland, Oregon 97204
503.223.5953

S. 1ST AND STRAND STREETS ROAD AND UTILITY EXTENSIONS

ST. HELENS, OREGON
IRRIGATION PLANS

IRRIGATION PLANS

TITLE

#	DATE	DESCRIPTION

REVISIONS

DATUM

MS — DRAWN BY
SVS — CHECKED BY

90% DESIGN
STATUS

JANUARY 10, 2021
DATE

19823
PROJECT NUMBER

L2.09

© 2021 OTAK, INC.

If this drawing is not 22" x 34", it has been reduced/enlarged. Scale accordingly.

Plotted: Jan 07, 2022 - 7:44pm ssimms M:\11\A PROJECTS\SHS-210142 DRAWINGS\1_CAD\4_SHEETS\L200-Irrigation Plans.dwg Layout Name: L2.09

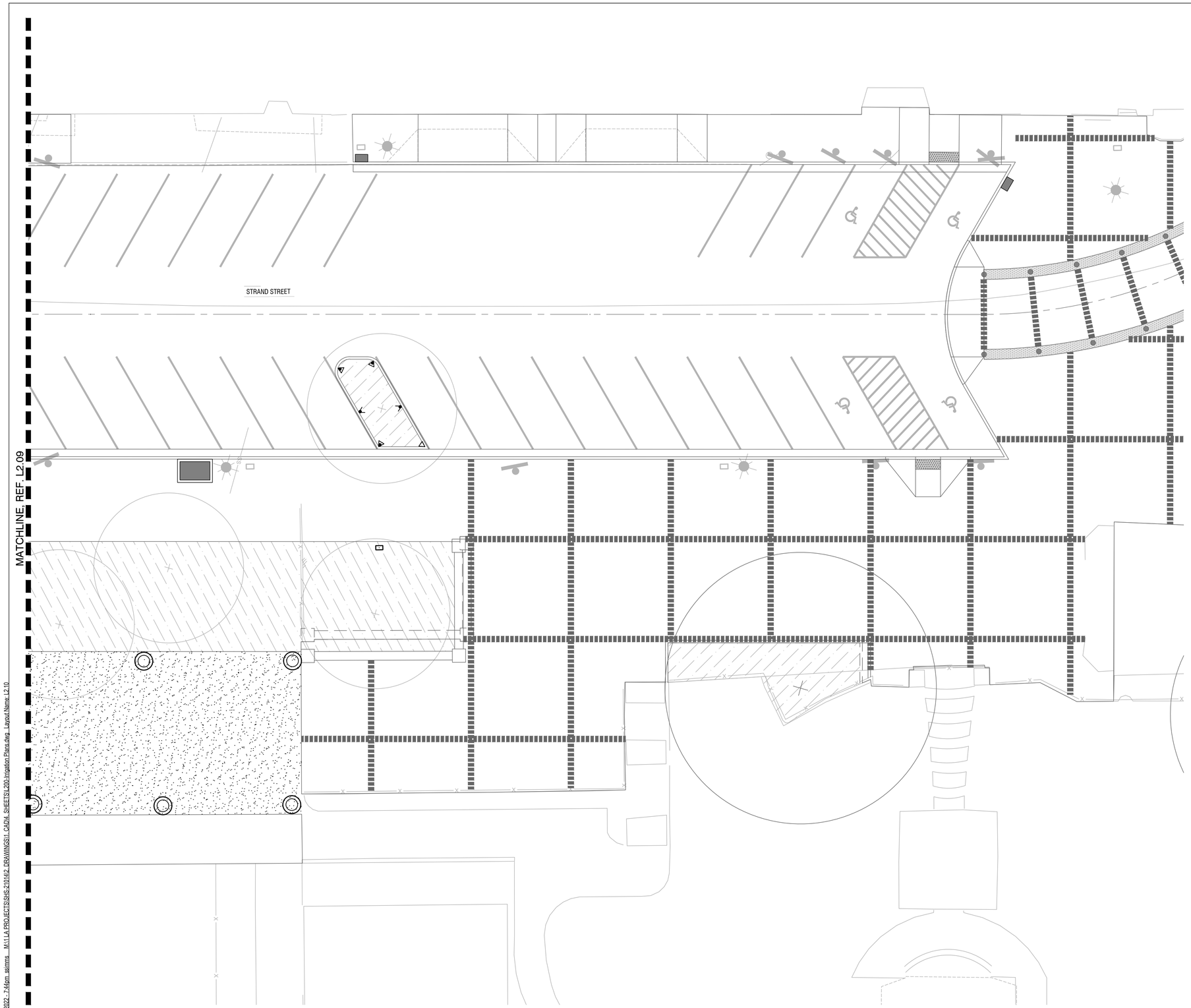

1 **IRRIGATION PLAN - STRAND STREET**
SCALE: 1"= 10'-0"

0 5' 10' 20'

N

IRRIGATION LEGEND

SYMBOL	DESCRIPTION	PSI	RADIUS	PATTERN	GPM
	RAINBIRD 1806-PRS-5	30	5'	Q, H, F	.10, .13, .41
	RAINBIRD 1806-PRS-8	30	8'	Q, H, F	.26, .52, 1.05
	RAINBIRD 1806-PRS-10	30	10'	Q, T, F	.39, .79, 1.58
	RAINBIRD 1806-PRS-12	30	12'	Q, T, F	.65, 1.30, 2.60
	RAINBIRD 1806-PRS-15	30	15'	Q, H, F	.92, 1.85, 3.7
	RAINBIRD XFS DRIPLINE ZONES, LAYOUT PER DETAILS	30	NA	12" O.C.	.01
	DRIP HOSE	30	NA	12" O.C.	.01
	RAINBIRD RWS-B-C-1401 PRESSURE COMPENSATING DRIP EMITTER	30	NA	F	.25

QTY

P.O.C. POINT OF CONNECTION

C CONTROLLER

REMOTE CONTROL VALVE

ISOLATION VALVE

QUICK COUPLER

X 1" 18.0 — VALVE SIZE / ZONE GPM / VALVE NO.

LINE SIZE

MAINLINE: X" SCHEDULE 40 PVC

LATERAL: SCHEDULE 40 PVC

SCHEDULE 40 PVC SLEEVES SIZE PER PLAN , 12" PAST PAVING EDGE

IRRIGATION NOTES

1. IT IS THE IRRIGATION CONTRACTOR'S RESPONSIBILITY TO COORDINATE ANY REQUIRED IRRIGATION SLEEVING WITH RESPECTIVE SUBCONTRACTORS BEFORE CONSTRUCTION BEGINS.

3. CONTRACTOR TO VERIFY AVAILABLE P.S.I. AT THE POINT OF CONNECTION BEFORE COMMENCEMENT OF INSTALLATION.

4. IT IS THE CONTRACTOR'S RESPONSIBILITY TO PROVIDE A FULLY FUNCTIONAL AUTOMATIC IRRIGATION SYSTEM PROVIDING FULL COVERAGE TO ALL PLANTING AREAS AND TREE WELLS AS DESCRIBED ON THE DRAWINGS AND IN THE SPECIFICATIONS. CONTRACTOR TO COORDINATE WITH UNIVERSITY MAINTENANCE STAFF AS TO EXISTING CONDITIONS AND SYSTEM REQUIREMENTS INCLUDING, QUICK COUPLER LOCATIONS, CONTROL VALVES, ETC..

5. THE LAYOUT OF THE IRRIGATION SYSTEM IS DIAGRAMMATIC ONLY. MODIFY LAYOUT AS REQUIRED TO ACCOMMODATE PLANT PLACEMENT, UTILITIES, AND UNDERGROUND OBSTRUCTIONS. REVIEW MODIFICATIONS WITH THE LANDSCAPE ARCHITECT PRIOR TO PROCEEDING.

6. SLEEVES SHALL BE INSTALLED 24 INCHES (MIN.) BELOW FINISHED PAVED SURFACE. ADJUST HEIGHT AS NEEDED TO ROUTE AROUND UTILITIES. EXTEND SLEEVES AT LEAST 12 INCHES INTO LAWN AND PLANTING AREAS, TYP.

7. INSTALL TRACE WIRE OVER ALL MAINLINE PIPE AND OVER CONTROL WIRE WHICH IS NOT INSTALLED IN TRENCH WITH PIPE. ROUTE FROM CONTROLLER TO ENDS OF PIPE. MAKE ALL CONNECTIONS WATER TIGHT.

8. CONTRACTOR TO SET FLAGS TO IDENTIFY PROPOSED VALVE AND VALVE BOX, QUICK COUPLER, ISOLATION VALVE, SPRINKLER LOCATIONS AND GENERAL LAYOUT OF MAIN LINES. OBTAIN LANDSCAPE ARCHITECT'S APPROVAL BEFORE EXCAVATION. PROVIDE 5 BUSINESS DAYS NOTICE TO L.A. PRIOR TO ANTICIPATED LAYOUT REVIEWS.

9. REFERENCE L301 AND L302 FOR GRADING INFORMATION

10. LOCATE VALVE BOXES SO AS TO BE HIDDEN FROM PEDESTRIAN VIEW. BROWN OR BLACK LIDS IN MULCH (PLANTING AREAS), GREEN LIDS IN LAWN AREAS.

PRELIMINARY

Mayer/Reed

Mayer/Reed, Inc.
319 SW Washington St.
Suite 820
Portland, Oregon 97204
503.223.5953

S. 1ST AND STRAND STREETS ROAD AND UTILITY EXTENSIONS
ST. HELENS, OREGON
IRRIGATION PLANS

IRRIGATION PLANS

TITLE

#	DATE	DESCRIPTION

REVISIONS

DATUM

MS — DRAWN BY
SVS — CHECKED BY

90% DESIGN
STATUS

JANUARY 10, 2021
DATE

19823
PROJECT NUMBER

L2.10

© 2021 OTAK, INC.

If this drawing is not 22" x 34", it has been reduced/enlarged. Scale accordingly.

Plotted: Jan 07, 2022 - 7:44pm ssimms M:\11\A PROJECTS\SHS-210142\ DRAWINGS\1. CAD\4. SHEETS\L200-Irrigation Plans.dwg Layout Name: L2.10

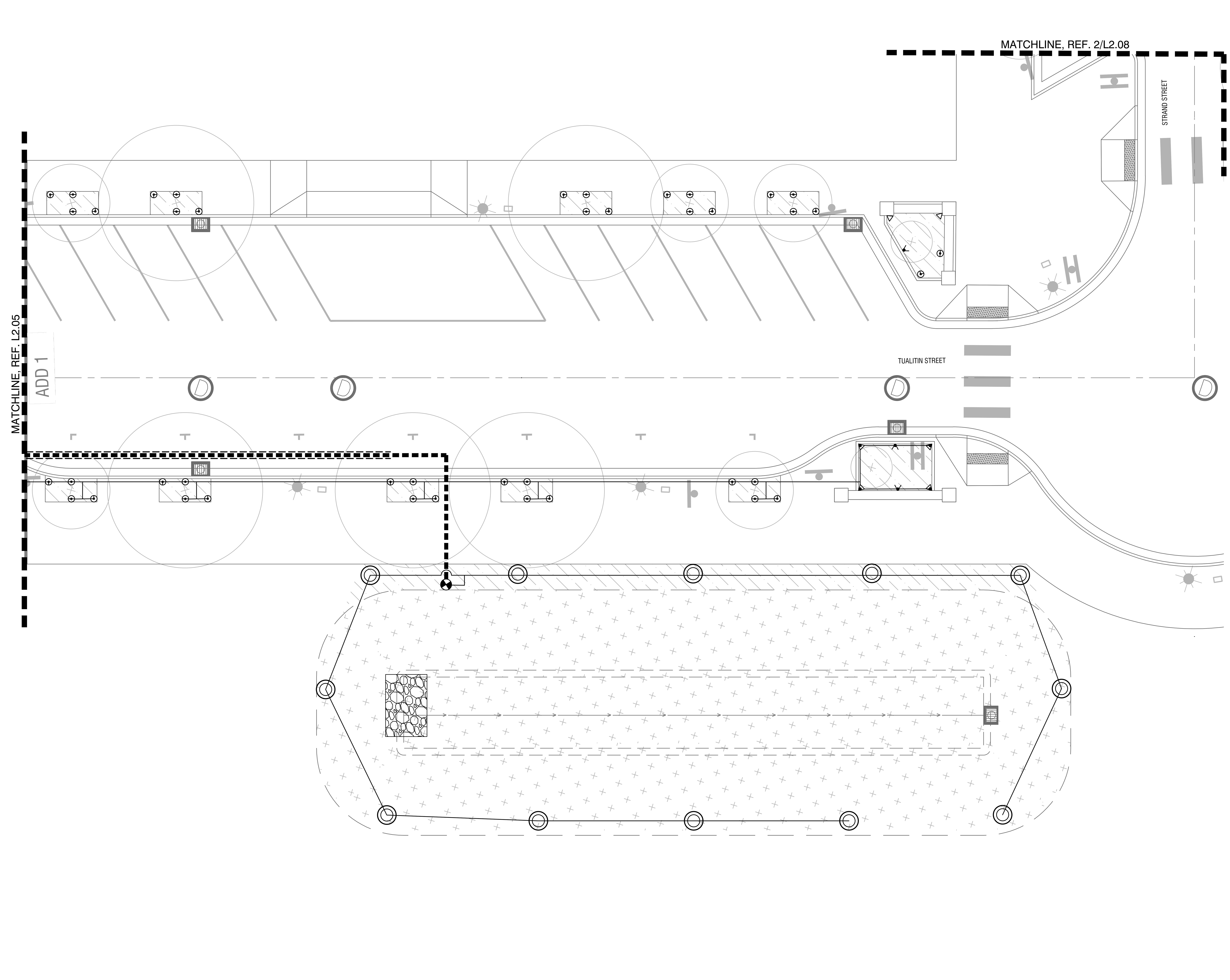

IRRIGATION LEGEND

SYMBOL	DESCRIPTION	PSI	RADIUS	PATTERN	GPM
	RAINBIRD 1806-PRS-5	30	5'	Q, H, F	.10, .13, .41
	RAINBIRD 1806-PRS-8	30	8'	Q, H, F	.26, .52, 1.05
	RAINBIRD 1806-PRS-10	30	10'	Q, T, F	.39, .79, 1.58
	RAINBIRD 1806-PRS-12	30	12'	Q, T, F	.65, 1.30, 2.60
	RAINBIRD 1806-PRS-15	30	15'	Q, H, F	.92, 1.85, 3.7
	RAINBIRD XFS DRIPLINE ZONES, LAYOUT PER DETAILS	30	NA	12" O.C.	.01
	DRIP HOSE	30	NA	12" O.C.	.01
	RAINBIRD RWS-B-C-1401	30	NA	F	.25

3 — PRESSURE COMPENSATING DRIP EMITTER QTY

X | 1" | 18.0 — VALVE SIZE, ZONE GPM, VALVE NO.

P.O.C. — POINT OF CONNECTION
C — CONTROLLER

REMOTE CONTROL VALVE
ISOLATION VALVE
QUICK COUPLER

MAINLINE: X" SCHEDULE 40 PVC
LATERAL: SCHEDULE 40 PVC — LINE SIZE
SCHEDULE 40 PVC SLEEVES SIZE PER PLAN , 12" PAST PAVING EDGE

IRRIGATION NOTES

1. IT IS THE IRRIGATION CONTRACTOR'S RESPONSIBILITY TO COORDINATE ANY REQUIRED IRRIGATION SLEEVING WITH RESPECTIVE SUBCONTRACTORS BEFORE CONSTRUCTION BEGINS.

3. CONTRACTOR TO VERIFY AVAILABLE P.S.I. AT THE POINT OF CONNECTION BEFORE COMMENCEMENT OF INSTALLATION.

4. IT IS THE CONTRACTOR'S RESPONSIBILITY TO PROVIDE A FULLY FUNCTIONAL AUTOMATIC IRRIGATION SYSTEM PROVIDING FULL COVERAGE TO ALL PLANTING AREAS AND TREE WELLS AS DESCRIBED ON THE DRAWINGS AND IN THE SPECIFICATIONS. CONTRACTOR TO COORDINATE WITH UNIVERSITY MAINTENANCE STAFF AS TO EXISTING CONDITIONS AND SYSTEM REQUIREMENTS INCLUDING, QUICK COUPLER LOCATIONS, CONTROL VALVES, ETC..

5. THE LAYOUT OF THE IRRIGATION SYSTEM IS DIAGRAMMATIC ONLY. MODIFY LAYOUT AS REQUIRED TO ACCOMMODATE PLANT PLACEMENT, UTILITIES, AND UNDERGROUND OBSTRUCTIONS. REVIEW MODIFICATIONS WITH THE LANDSCAPE ARCHITECT PRIOR TO PROCEEDING.

6. SLEEVES SHALL BE INSTALLED 24 INCHES (MIN.) BELOW FINISHED PAVED SURFACE. ADJUST HEIGHT AS NEEDED TO ROUTE AROUND UTILITIES. EXTEND SLEEVES AT LEAST 12 INCHES INTO LAWN AND PLANTING AREAS, TYP.

7. INSTALL TRACE WIRE OVER ALL MAINLINE PIPE AND OVER CONTROL WIRE WHICH IS NOT INSTALLED IN TRENCH WITH PIPE. ROUTE FROM CONTROLLER TO ENDS OF PIPE. MAKE ALL CONNECTIONS WATER TIGHT.

8. CONTRACTOR TO SET FLAGS TO IDENTIFY PROPOSED VALVE AND VALVE BOX, QUICK COUPLER, ISOLATION VALVE, SPRINKLER LOCATIONS AND GENERAL LAYOUT OF MAIN LINES. OBTAIN LANDSCAPE ARCHITECT'S APPROVAL BEFORE EXCAVATION. PROVIDE 5 BUSINESS DAYS NOTICE TO L.A. PRIOR TO ANTICIPATED LAYOUT REVIEWS.

9. REFERENCE L301 AND L302 FOR GRADING INFORMATION

10. LOCATE VALVE BOXES SO AS TO BE HIDDEN FROM PEDESTRIAN VIEW. BROWN OR BLACK LIDS IN MULCH (PLANTING AREAS), GREEN LIDS IN LAWN AREAS.

1 IRRIGATION PLAN - STRAND STREET & TUALITIN STREET
SCALE: 1"= 10'-0"

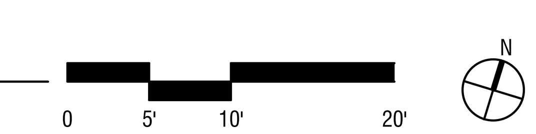

City of St. Helens
FOUNDED 1850

PRELIMINARY

Mayer/Reed
Mayer/Reed, Inc.
319 SW Washington St.
Suite 820
Portland, Oregon 97204
503.223.5953

S. 1ST AND STRAND STREETS ROAD AND UTILITY EXTENSIONS

ST. HELENS, OREGON
IRRIGATION PLANS

IRRIGATION PLANS

TITLE

#	DATE	DESCRIPTION

REVISIONS

DATUM

MS — DRAWN BY
SVS — CHECKED BY

90% DESIGN — STATUS

JANUARY 10, 2021 — DATE

19823 — PROJECT NUMBER

L2.11

© 2021 OTAK, INC.

If this drawing is not 22" x 34", it has been reduced/enlarged. Scale accordingly.

Plotted: Jan 07, 2022 - 7:46pm ssimms M:\1 LA PROJECTS\SHS-21014\2_DRAWINGS\1_CAD\4_SHEETS\L200-Irrigation Plans.dwg Layout Name: L2.11

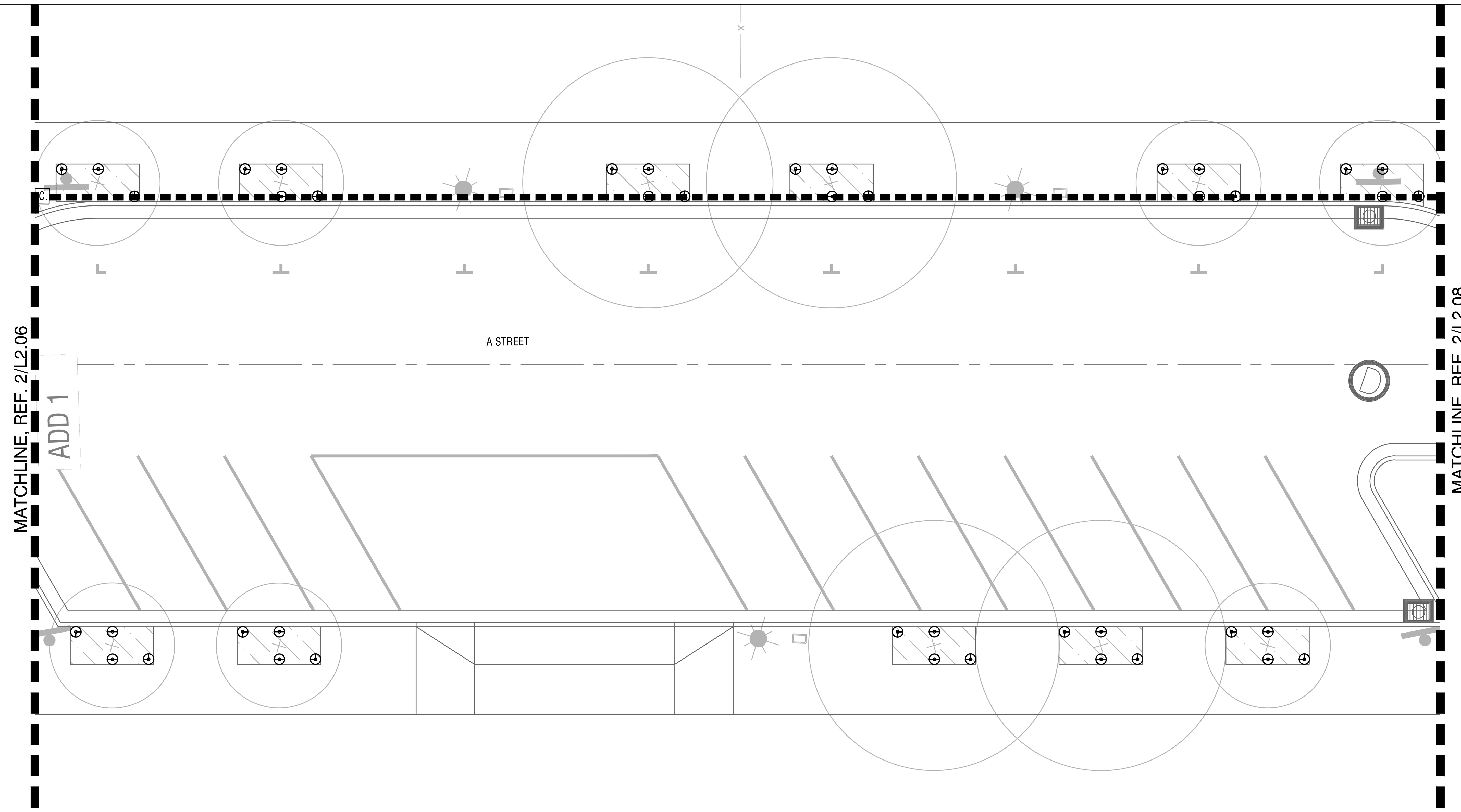

1 IRRIGATION PLAN - A STREET
SCALE: 1"= 10'-0"

0 5' 10' 20'

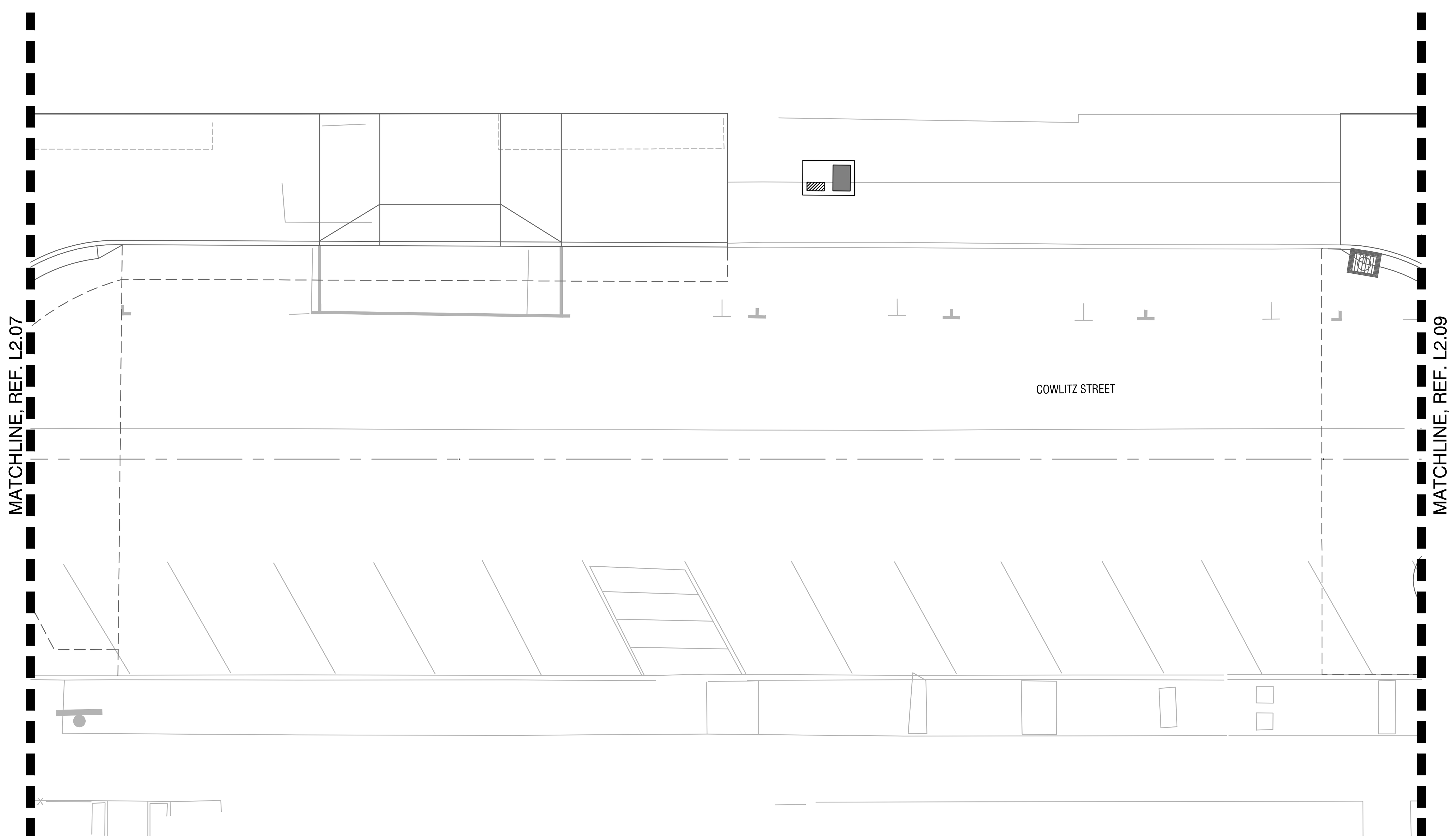

2 IRRIGATION PLAN - COWLITZ STREET
SCALE: 1"= 10'-0"

0 5' 10' 20'

IRRIGATION LEGEND

SYMBOL	DESCRIPTION	PSI	RADIUS	PATTERN	GPM
	RAINBIRD 1806-PRS-5	30	5'	Q, H, F	.10, .13, .41
	RAINBIRD 1806-PRS-8	30	8'	Q, H, F	.26, .52, 1.05
	RAINBIRD 1806-PRS-10	30	10'	Q, T, F	.39, .79, 1.58
	RAINBIRD 1806-PRS-12	30	12'	Q, T, F	.65, 1.30, 2.60
	RAINBIRD 1806-PRS-15	30	15'	Q, H, F	.92, 1.85, 3.7
	RAINBIRD XFS DRIPLINE ZONES, LAYOUT PER DETAILS	30	NA	12" O.C.	.01
	DRIP HOSE	30	NA	12" O.C.	.01
	RAINBIRD RWS-B-C-1401	30	NA	F	.25
3	PRESSURE COMPENSATING DRIP EMITTER QTY				

P.O.C. — POINT OF CONNECTION
C — CONTROLLER

REMOTE CONTROL VALVE
ISOLATION VALVE
QUICK COUPLER

X | 1" | 18.0 — VALVE SIZE; ZONE GPM; VALVE NO.

MAINLINE: X" SCHEDULE 40 PVC
LATERAL: SCHEDULE 40 PVC — LINE SIZE
SCHEDULE 40 PVC SLEEVES SIZE PER PLAN , 12" PAST PAVING EDGE

IRRIGATION NOTES

1. IT IS THE IRRIGATION CONTRACTOR'S RESPONSIBILITY TO COORDINATE ANY REQUIRED IRRIGATION SLEEVING WITH RESPECTIVE SUBCONTRACTORS BEFORE CONSTRUCTION BEGINS.

3. CONTRACTOR TO VERIFY AVAILABLE P.S.I. AT THE POINT OF CONNECTION BEFORE COMMENCEMENT OF INSTALLATION.

4. IT IS THE CONTRACTOR'S RESPONSIBILITY TO PROVIDE A FULLY FUNCTIONAL AUTOMATIC IRRIGATION SYSTEM PROVIDING FULL COVERAGE TO ALL PLANTING AREAS AND TREE WELLS AS DESCRIBED ON THE DRAWINGS AND IN THE SPECIFICATIONS. CONTRACTOR TO COORDINATE WITH UNIVERSITY MAINTENANCE STAFF AS TO EXISTING CONDITIONS AND SYSTEM REQUIREMENTS INCLUDING, QUICK COUPLER LOCATIONS, CONTROL VALVES, ETC..

5. THE LAYOUT OF THE IRRIGATION SYSTEM IS DIAGRAMMATIC ONLY. MODIFY LAYOUT AS REQUIRED TO ACCOMMODATE PLANT PLACEMENT, UTILITIES, AND UNDERGROUND OBSTRUCTIONS. REVIEW MODIFICATIONS WITH THE LANDSCAPE ARCHITECT PRIOR TO PROCEEDING.

6. SLEEVES SHALL BE INSTALLED 24 INCHES (MIN.) BELOW FINISHED PAVED SURFACE. ADJUST HEIGHT AS NEEDED TO ROUTE AROUND UTILITIES. EXTEND SLEEVES AT LEAST 12 INCHES INTO LAWN AND PLANTING AREAS, TYP.

7. INSTALL TRACE WIRE OVER ALL MAINLINE PIPE AND OVER CONTROL WIRE WHICH IS NOT INSTALLED IN TRENCH WITH PIPE. ROUTE FROM CONTROLLER TO ENDS OF PIPE. MAKE ALL CONNECTIONS WATER TIGHT.

8. CONTRACTOR TO SET FLAGS TO IDENTIFY PROPOSED VALVE AND VALVE BOX, QUICK COUPLER, ISOLATION VALVE, SPRINKLER LOCATIONS AND GENERAL LAYOUT OF MAIN LINES. OBTAIN LANDSCAPE ARCHITECT'S APPROVAL BEFORE EXCAVATION. PROVIDE 5 BUSINESS DAYS NOTICE TO L.A. PRIOR TO ANTICIPATED LAYOUT REVIEWS.

9. REFERENCE L301 AND L302 FOR GRADING INFORMATION

10. LOCATE VALVE BOXES SO AS TO BE HIDDEN FROM PEDESTRIAN VIEW. BROWN OR BLACK LIDS IN MULCH (PLANTING AREAS), GREEN LIDS IN LAWN AREAS.

City of St. Helens
FOUNDED 1850

PRELIMINARY

Mayer/Reed
Mayer/Reed, Inc.
319 SW Washington St.
Suite 820
Portland, Oregon 97204
503.223.5953

S. 1ST AND STRAND STREETS ROAD AND UTILITY EXTENSIONS
ST. HELENS, OREGON
IRRIGATION PLANS

IRRIGATION PLANS

TITLE

#	DATE	DESCRIPTION

REVISIONS

DATUM

MS — DRAWN BY
SVS — CHECKED BY

90% DESIGN
STATUS

JANUARY 10, 2021
DATE

19823
PROJECT NUMBER

L2.12

© 2021 OTAK, INC.
If this drawing is not 22" x 34", it has been reduced/enlarged. Scale accordingly.

Plotted: Jan 07, 2022 - 7:45pm ssimms M:\1 LA PROJECTS\SHS-21014\2_DRAWINGS\1_CAD\4_SHEETS\L200-Irrigation Plans.dwg Layout Name: L2.12

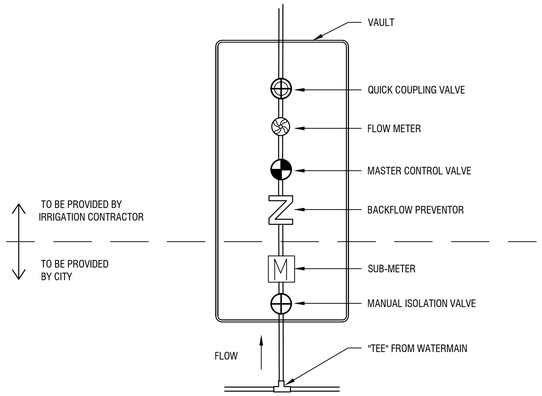

1 POINT OF CONNECTION - PLAN
SCALE: 1"= 1'-0"
L240-IRRIGATION DETAILS.DWG

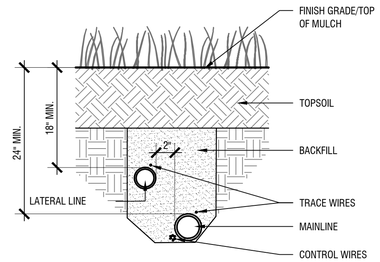

2 TRENCHING - SECTION
SCALE: N.T.S.
L240-IRRIGATION DETAILS.DWG

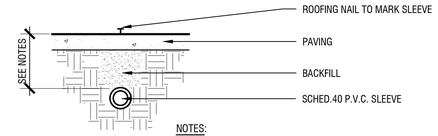

SECTION AT PAVING

NOTES:
1. EXTEND IRRIGATION SLEEVE 6 INCHES BEYOND EDGE OF PAVING.
2. DEPTH OF MAINLINE = 18 INCHES
3. DEPTH OF LATERAL LINE @ PAVING = 14 INCHES
4. DEPTH OF LINES UNDER PAVING SURFACE = 24 INCHES MIN.

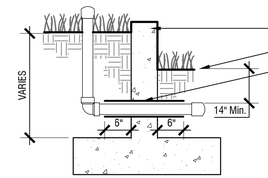

SECTION AT WALLS

NOTES:
1. INSTALL SCHED 80 P.V.C. PIPE, SIZE AS SPECIFIED, IN SLEEVE BEFORE BACKFILLING WALL. CAP BOTH ENDS WITHOUT GLUE.

2. INSTALL IRRIGATION SLEEVES AS SPECIFIED AT SAME TIME OF WALL CONSTRUCTION.

NOTE:
SLEEVES ARE TO BE TWICE THE DIAMETER OF THE LINE OR LINES PASSING THROUGH THEM.

3 IRRIGATION SLEEVES
SCALE: N.T.S.
L240-IRRIGATION DETAILS.DWG

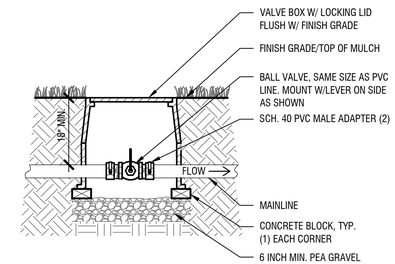

4 ISOLATION VALVE - SECTION
SCALE: N.T.S.
L240-IRRIGATION DETAILS.DWG

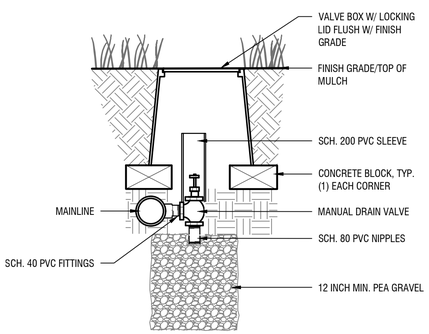

5 MANUAL DRAIN VAVLE - SECTION
SCALE: N.T.S.
L240-IRRIGATION DETAILS.DWG

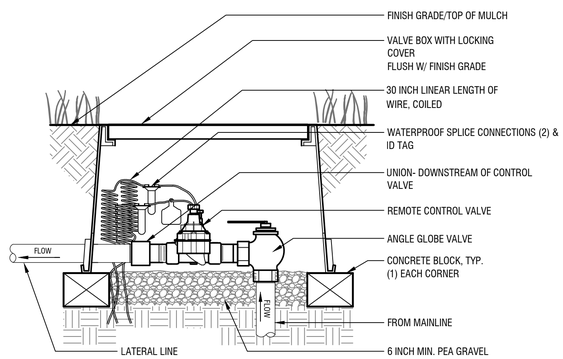

6 REMOTE CONTROL VALVE @ SPRAY ZONES - SECTION
SCALE: N.T.S.
L240-IRRIGATION DETAILS.DWG

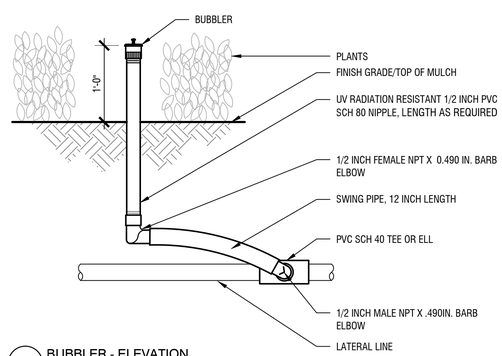

7 BUBBLER - ELEVATION
SCALE: N.T.S.
L240-IRRIGATION DETAILS.DWG

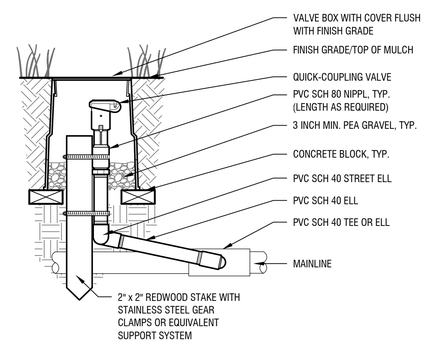

8 QUICK COUPLING VAVLE - SECTION
SCALE: N.T.S.
L240-IRRIGATION DETAILS.DWG

PRELIMINARY

Mayer/Reed
Mayer/Reed, Inc.
319 SW Washington St.
Suite 820
Portland, Oregon 97204
503.223.5953

S. 1ST AND STRAND STREETS ROAD AND UTILITY EXTENSIONS
ST. HELENS, OREGON
IRRIGATION PLANS

IRRIGATION DETAILS

TITLE

#	DATE	DESCRIPTION

REVISIONS

DATUM

MS — DRAWN BY
SVS — CHECKED BY

90% DESIGN
STATUS

JANUARY 10, 2021
DATE

19823
PROJECT NUMBER

L2.40

© 2021 OTAK, INC.

If this drawing is not 22" x 34", it has been reduced/enlarged. Scale accordingly.

Plotted: Jan 07, 2022 - 7:41pm sstimms M:\11\A PROJECTS\HS-210142 DRAWINGS\1 CADd SHEETS\L240-Irrigation Details.dwg Layout Name: L2.40

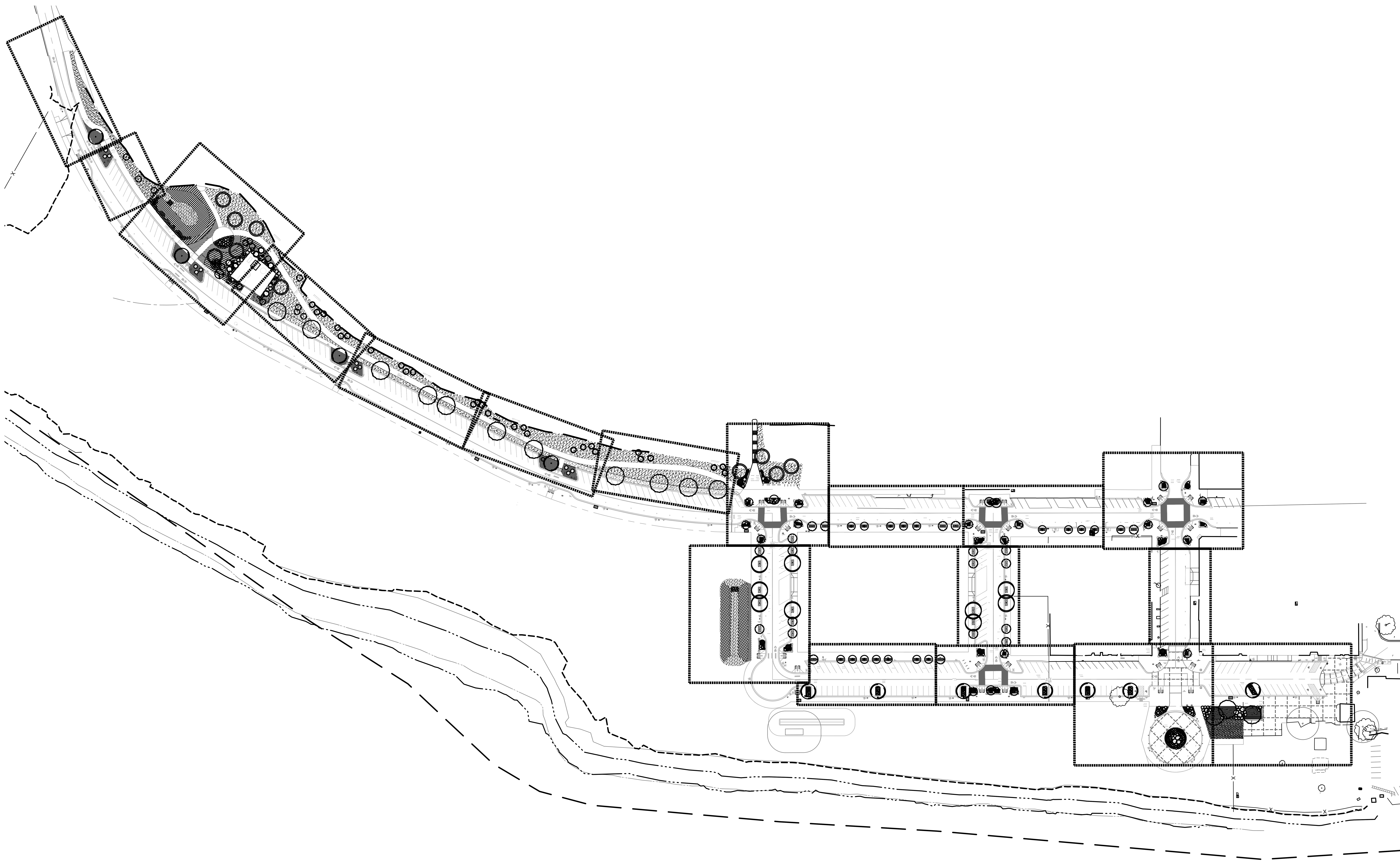

1 PLANTING KEY PLAN
SCALE: 1" = 80'-0"

0 40' 80' 160'

PRELIMINARY

Mayer/Reed

Mayer/Reed, Inc.
319 SW Washington St.
Suite 820
Portland, Oregon 97204
503.223.5953

S. 1ST AND STRAND STREETS ROAD AND UTILITY EXTENSIONS

ST. HELENS, OREGON
PLANTING PLANS

PLANTING KEY PLAN

TITLE

#	DATE	DESCRIPTION

REVISIONS

DATUM

MS — DRAWN BY
SVS — CHECKED BY

90% DESIGN — STATUS

JANUARY 10, 2021 — DATE

19823 — PROJECT NUMBER

L3.00

© 2021 OTAK, INC.

If this drawing is not 22" x 34", it has been reduced/enlarged. Scale accordingly.

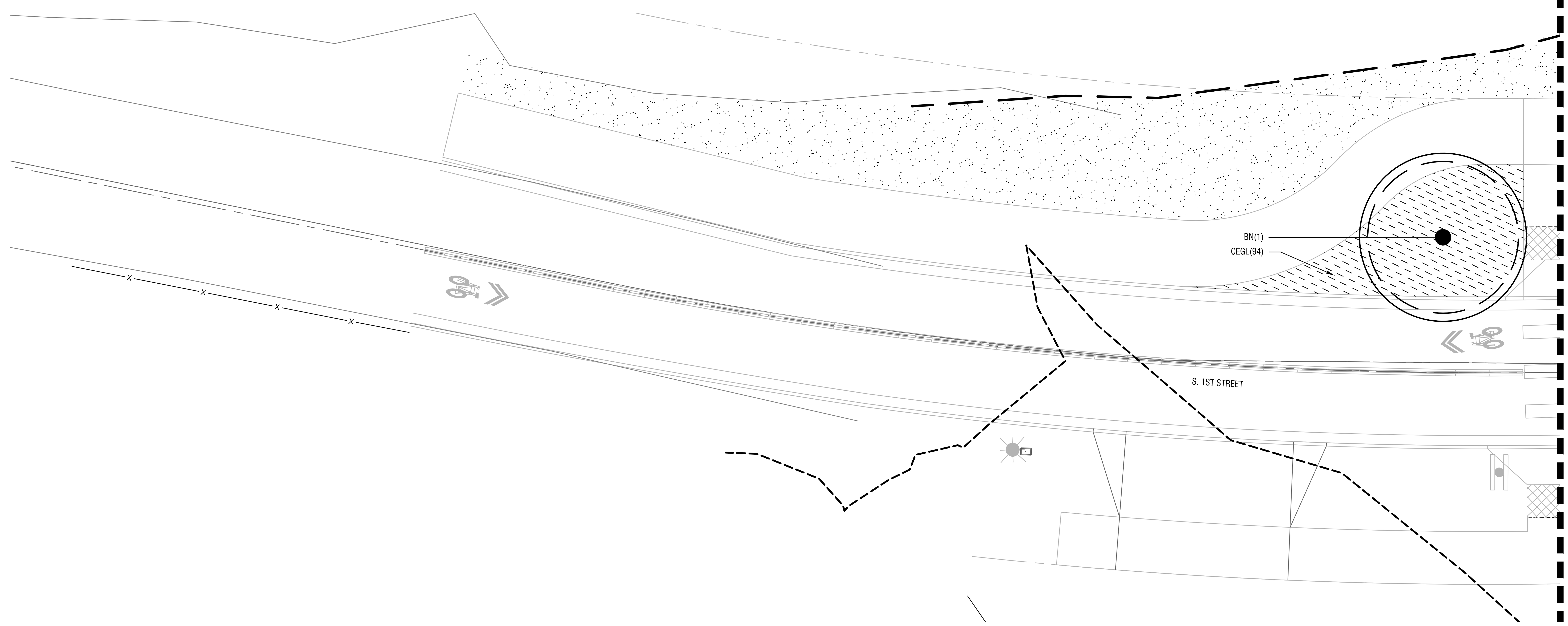

1 **PLANTING PLAN - S. 1ST STREET**
SCALE: 1" = 10'-0"

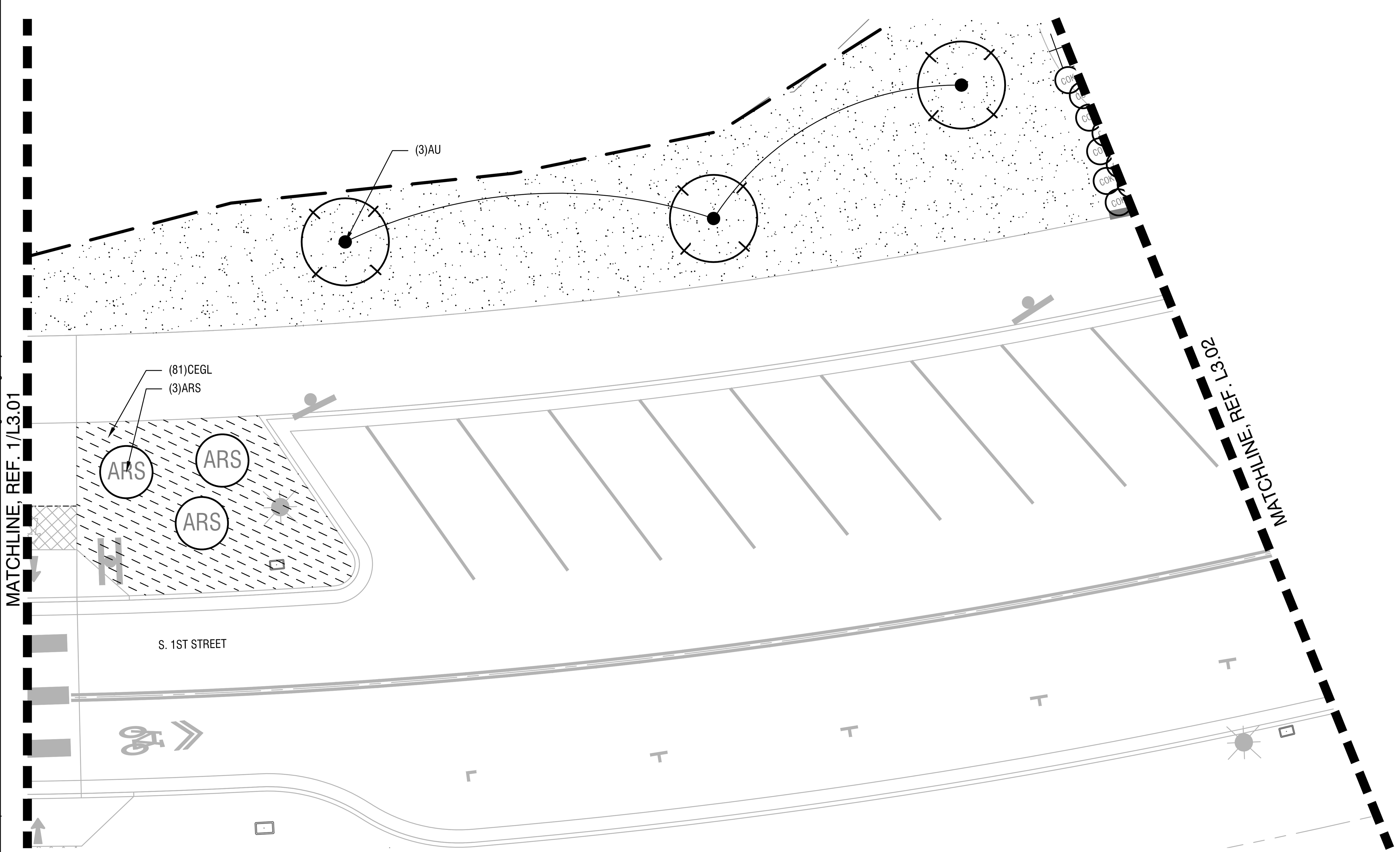

2 **PLANTING PLAN - S. 1ST STREET**
SCALE: 1" = 10'-0"

PLANTING NOTES

1. DO NOT BEGIN PLANTING UNTIL IRRIGATION SYSTEM IS INSTALLED, TESTED AND APPROVED BY LANDSCAPE ARCHITECT.
2. DO NOT BEGIN PLANTING UNTIL SOIL PREPARATION IS COMPLETE AND APPROVED BY LANDSCAPE ARCHITECT. TOPSOIL DEPTH WITHIN SHRUB AREAS IS 24 INCHES DEPTH WITH 2 INCHES MULCH TOP DRESSING. PLANTING SOIL WITHIN LAWN AREAS IS 9 INCHES.
3. LOCATE PLANTS AS DIMENSIONED ON THE PLANS AND AS SHOWN IN THE PLANT SCHEDULE. PLANT SPACING IS MEASURED CENTER TO CENTER. PLANT LOCATIONS MAY BE ADJUSTED BY THE LANDSCAPE ARCHITECT TO MEET FIELD CONDITIONS.
4. VERIFY ALL QUANTITIES AND VARIETIES SHOWN ON THE DRAWINGS PRIOR TO ORDERING. OWNER MUST APPROVE ANY NECESSARY SUBSTITUTIONS DURING SUBMITTALS PROCESS. REVIEW PROCESS TO BE ESTABLISHED AT PRE-CONSTRUCTION MEETING.
5. THOROUGHLY WATER IN ALL PLANTS WITHIN 6 HOURS OF PLANTING.
6. APPLY SPECIFIED MULCH OVER PLANTING AREAS WITHIN TWO DAYS OF INSTALLING PLANTS, UNLESS OTHERWISE NOTED.
7. ALL PLANTS ARE REQUIRED TO MEET AMERICAN STANDARD FOR NURSERY STOCK, ANSI Z60.1-2014.
8. TO CALCULATE THE QUANTITY OF PLANTS PER AREA, USE THE FOLLOWING SPACING MULTIPLIERS:

TRIANGULAR SPACING	9"	12"	15"	18"	24"	30"	36"	48"
SQUARE FT MULTIPLIER	2.027	1.156	0.513	0.322	0.288	0.184	0.128	0.072

City of St. Helens
FOUNDED 1850

PRELIMINARY

Mayer/Reed

Mayer/Reed, Inc.
319 SW Washington St.
Suite 820
Portland, Oregon 97204
503.223.5953

S. 1ST AND STRAND STREETS ROAD AND UTILITY EXTENSIONS
ST. HELENS, OREGON
PLANTING PLANS

PLANTING PLANS

TITLE

#	DATE	DESCRIPTION

REVIEWS

DATUM

MS — DRAWN BY
SVS — CHECKED BY

90% DESIGN — STATUS

JANUARY 10, 2021 — DATE

19823 — PROJECT NUMBER

L3.01

© 2021 OTAK, INC.

If this drawing is not 22" x 34", it has been reduced/enlarged. Scale accordingly.

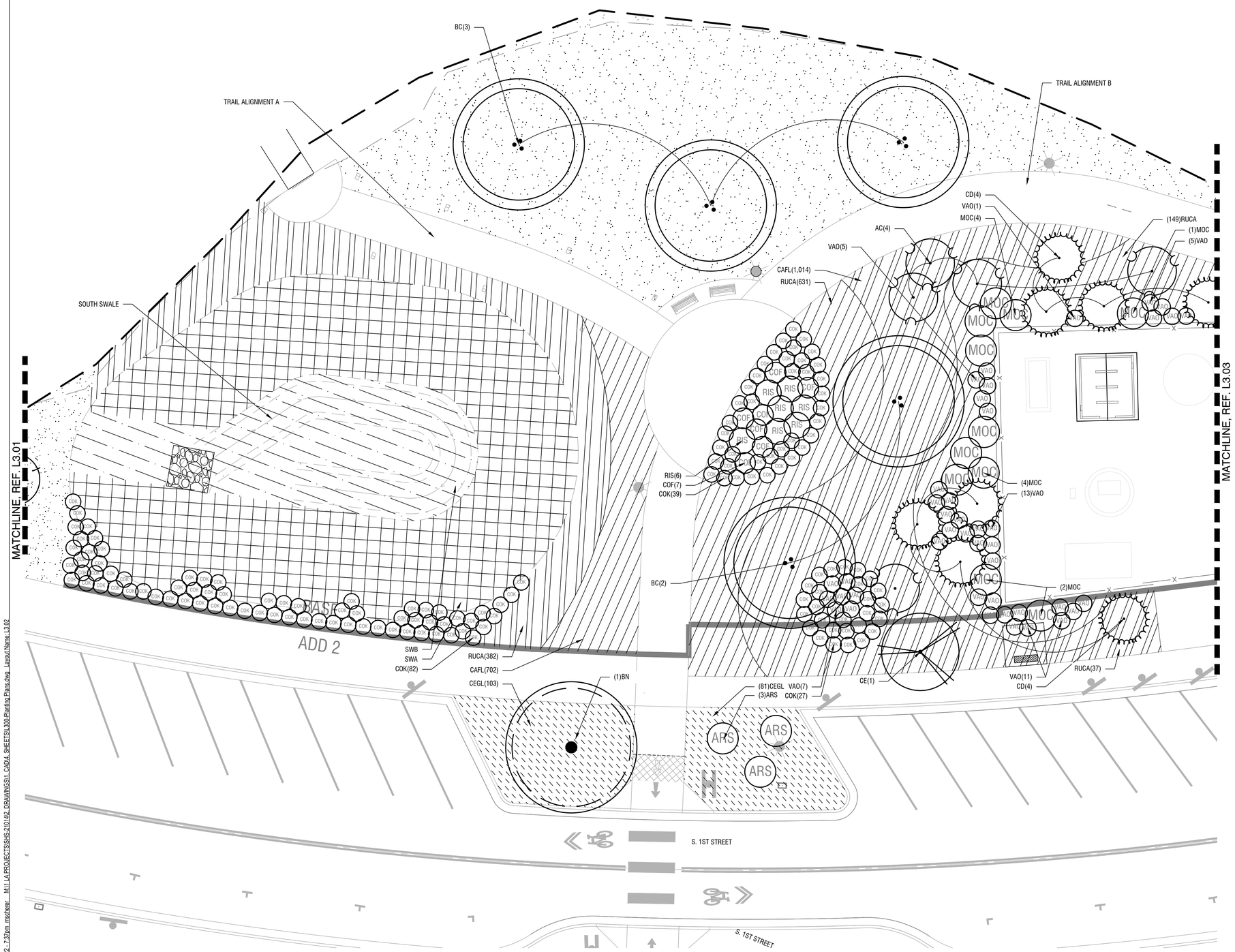

1 **PLANTING PLAN - BLUFF TRAIL SOUTH TERMINUS**
SCALE: 1"= 10'-0"

PLANTING NOTES

1. DO NOT BEGIN PLANTING UNTIL IRRIGATION SYSTEM IS INSTALLED, TESTED AND APPROVED BY LANDSCAPE ARCHITECT.
2. DO NOT BEGIN PLANTING UNTIL SOIL PREPARATION IS COMPLETE AND APPROVED BY LANDSCAPE ARCHITECT. TOPSOIL DEPTH WITHIN SHRUB AREAS IS 24 INCHES DEPTH WITH 2 INCHES MULCH TOP DRESSING. PLANTING SOIL WITHIN LAWN AREAS IS 9 INCHES.
3. LOCATE PLANTS AS DIMENSIONED ON THE PLANS AND AS SHOWN IN THE PLANT SCHEDULE. PLANT SPACING IS MEASURED CENTER TO CENTER. PLANT LOCATIONS MAY BE ADJUSTED BY THE LANDSCAPE ARCHITECT TO MEET FIELD CONDITIONS.
4. VERIFY ALL QUANTITIES AND VARIETIES SHOWN ON THE DRAWINGS PRIOR TO ORDERING. OWNER MUST APPROVE ANY NECESSARY SUBSTITUTIONS DURING SUBMITTALS PROCESS. REVIEW PROCESS TO BE ESTABLISHED AT PRE-CONSTRUCTION MEETING.
5. THOROUGHLY WATER IN ALL PLANTS WITHIN 6 HOURS OF PLANTING.
6. APPLY SPECIFIED MULCH OVER PLANTING AREAS WITHIN TWO DAYS OF INSTALLING PLANTS, UNLESS OTHERWISE NOTED.
7. ALL PLANTS ARE REQUIRED TO MEET AMERICAN STANDARD FOR NURSERY STOCK, ANSI Z60.1-2014.
8. TO CALCULATE THE QUANTITY OF PLANTS PER AREA, USE THE FOLLOWING SPACING MULTIPLIERS:

TRIANGULAR SPACING	9"	12"	15"	18"	24"	30"	36"	48"
SQUARE FT MULTIPLIER	2.027	1.156	0.513	0.322	0.288	0.184	0.128	0.072

City of St. Helens
FOUNDED 1850

PRELIMINARY

Mayer/Reed
Mayer/Reed, Inc.
319 SW Washington St.
Suite 820
Portland, Oregon 97204
503.223.5953

S. 1ST AND STRAND STREETS ROAD AND UTILITY EXTENSIONS
ST. HELENS, OREGON
PLANTING PLANS

PLANTING PLANS

TITLE

#	DATE	DESCRIPTION

REVISIONS

DATUM

MS — DRAWN BY
SVS — CHECKED BY

90% DESIGN
STATUS

JANUARY 10, 2021
DATE

19823
PROJECT NUMBER

L3.02

© 2021 OTAK, INC.

If this drawing is not 22" x 34", it has been reduced/enlarged. Scale accordingly.

Plotted: Jan 07, 2022 - 7:37pm mscherer M:\1LA PROJECTS\HS-210142_DRAWINGS\1.CAD\4_SHEETS\1-300-Planting Plans.dwg Layout Name: L3.02

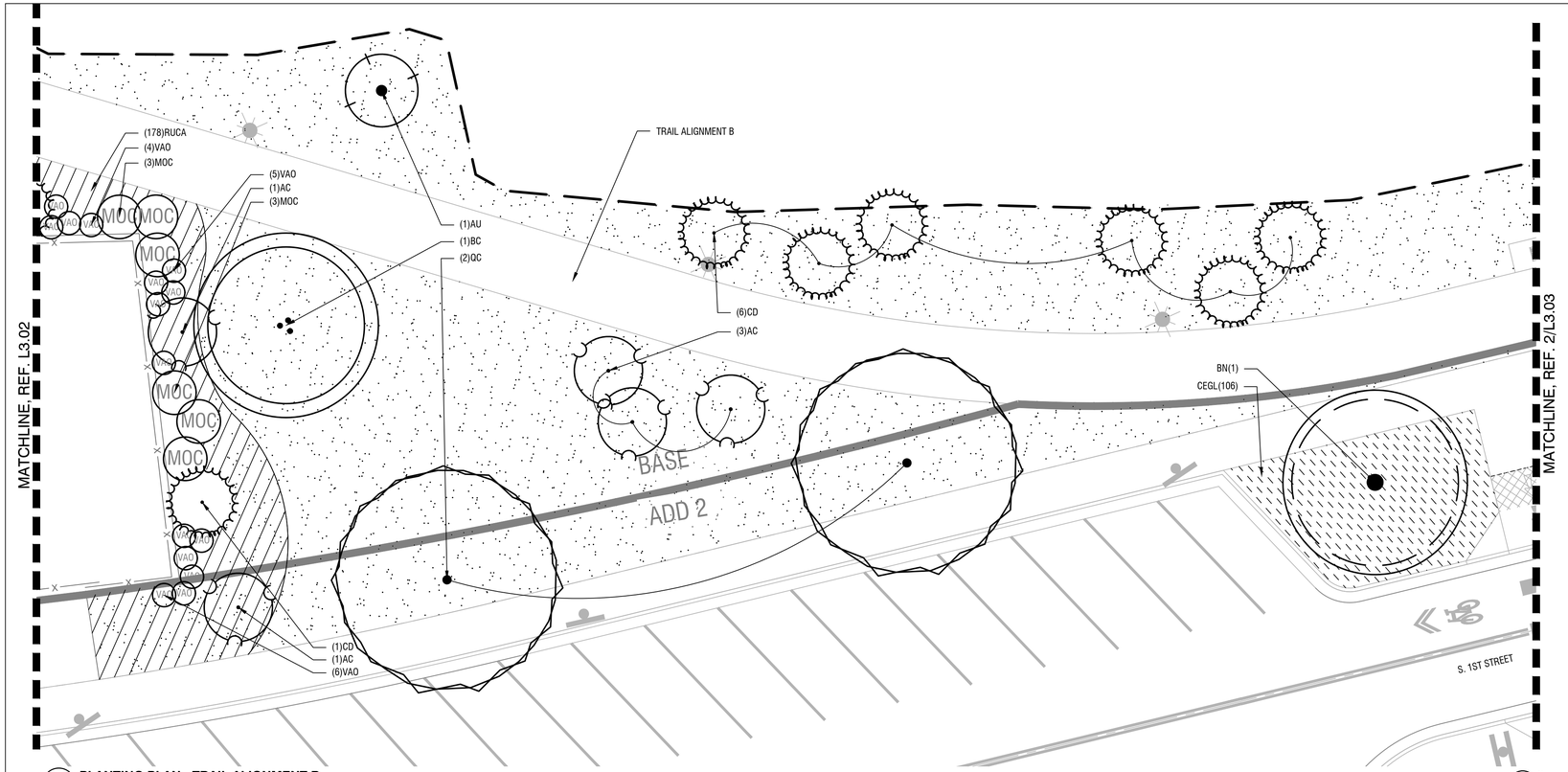

1 **PLANTING PLAN - TRAIL ALIGNMENT B**
SCALE: 1"= 10'-0"

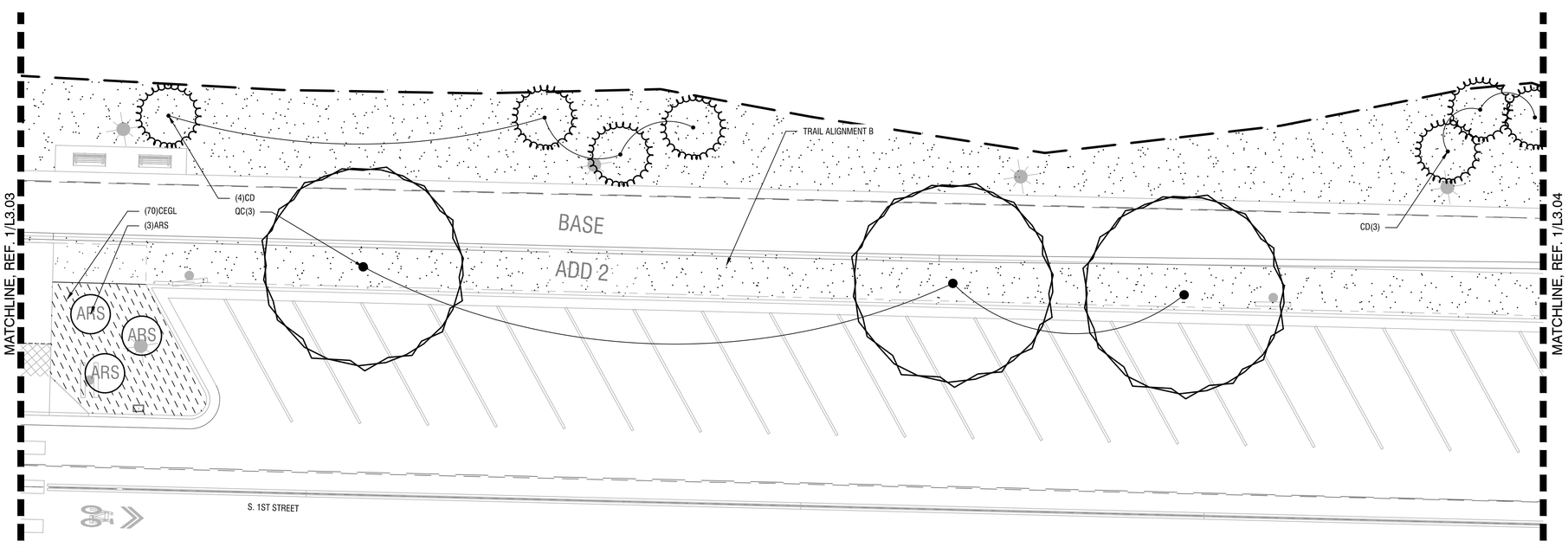

2 **PLANTING PLAN - TRAIL ALIGNMENT B**
SCALE: 1"= 10'-0"

PLANTING NOTES

1. DO NOT BEGIN PLANTING UNTIL IRRIGATION SYSTEM IS INSTALLED, TESTED AND APPROVED BY LANDSCAPE ARCHITECT.
2. DO NOT BEGIN PLANTING UNTIL SOIL PREPARATION IS COMPLETE AND APPROVED BY LANDSCAPE ARCHITECT. TOPSOIL DEPTH WITHIN SHRUB AREAS IS 24 INCHES DEPTH WITH 2 INCHES MULCH TOP DRESSING. PLANTING SOIL WITHIN LAWN AREAS IS 9 INCHES.
3. LOCATE PLANTS AS DIMENSIONED ON THE PLANS AND AS SHOWN IN THE PLANT SCHEDULE. PLANT SPACING IS MEASURED CENTER TO CENTER. PLANT LOCATIONS MAY BE ADJUSTED BY THE LANDSCAPE ARCHITECT TO MEET FIELD CONDITIONS.
4. VERIFY ALL QUANTITIES AND VARIETIES SHOWN ON THE DRAWINGS PRIOR TO ORDERING. OWNER MUST APPROVE ANY NECESSARY SUBSTITUTIONS DURING SUBMITTALS PROCESS. REVIEW PROCESS TO BE ESTABLISHED AT PRE-CONSTRUCTION MEETING.
5. THOROUGHLY WATER IN ALL PLANTS WITHIN 6 HOURS OF PLANTING.
6. APPLY SPECIFIED MULCH OVER PLANTING AREAS WITHIN TWO DAYS OF INSTALLING PLANTS, UNLESS OTHERWISE NOTED.
7. ALL PLANTS ARE REQUIRED TO MEET AMERICAN STANDARD FOR NURSERY STOCK, ANSI Z60.1-2014.
8. TO CALCULATE THE QUANTITY OF PLANTS PER AREA, USE THE FOLLOWING SPACING MULTIPLIERS:

TRIANGULAR SPACING	9"	12"	15"	18"	24"	30"	36"	48"
SQUARE FT MULTIPLIER	2.027	1.156	0.513	0.322	0.288	0.184	0.128	0.072

City of St. Helens
FOUNDED 1850

PRELIMINARY

Mayer/Reed
Mayer/Reed, Inc.
319 SW Washington St.
Suite 820
Portland, Oregon 97204
503.223.5953

S. 1ST AND STRAND STREETS ROAD AND UTILITY EXTENSIONS
ST. HELENS, OREGON
PLANTING PLANS

PLANTING PLANS

TITLE

#	DATE	DESCRIPTION

REVISIONS

DATUM

MS — DRAWN BY
SVS — CHECKED BY

90% DESIGN
STATUS

JANUARY 10, 2021
DATE

19823
PROJECT NUMBER

L3.03

© 2021 OTAK, INC.

If this drawing is not 22" x 34", it has been reduced/enlarged. Scale accordingly.

Plotted: Jan 07, 2022 - 7:37pm mscherer M:\1 LA PROJECTS\SHS-210142_DRAWINGS\1_CAD\4_SHEETS\L300-Planting Plans.dwg Layout Name: L3.03

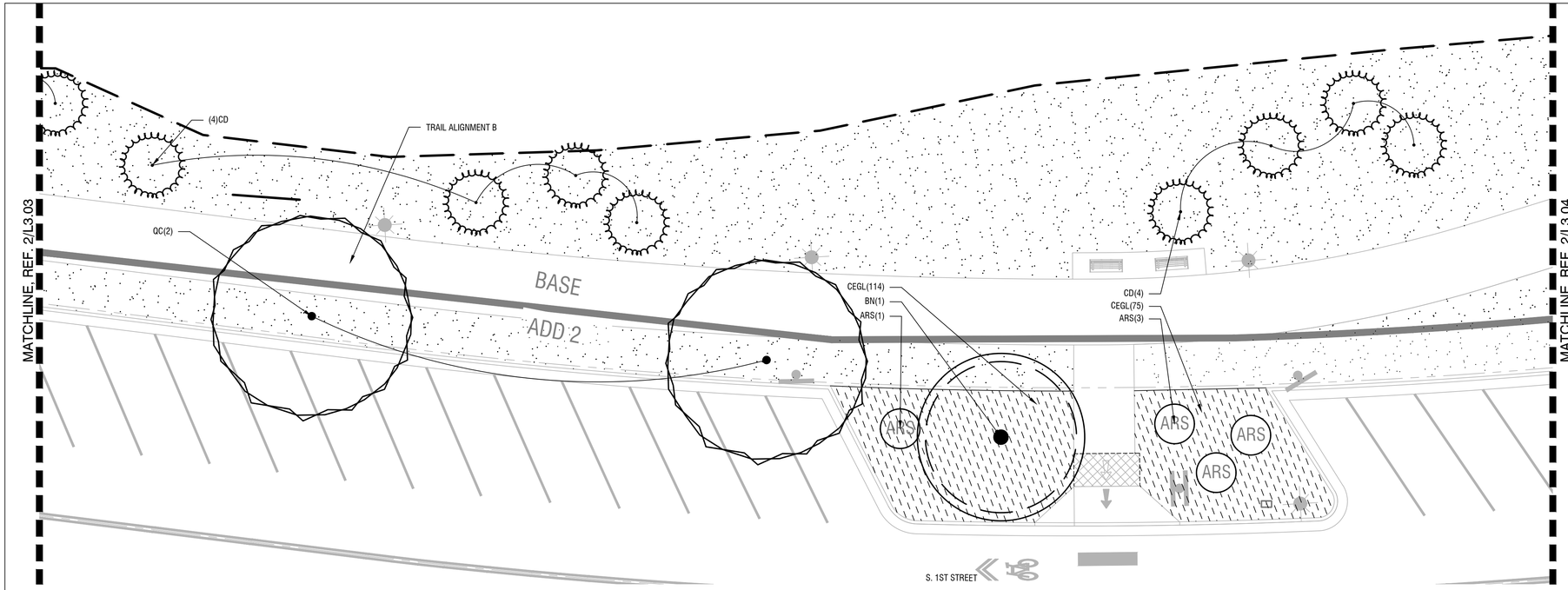

1 **PLANTING PLAN - TRAIL ALIGNMENT B**
SCALE: 1"= 10'-0"

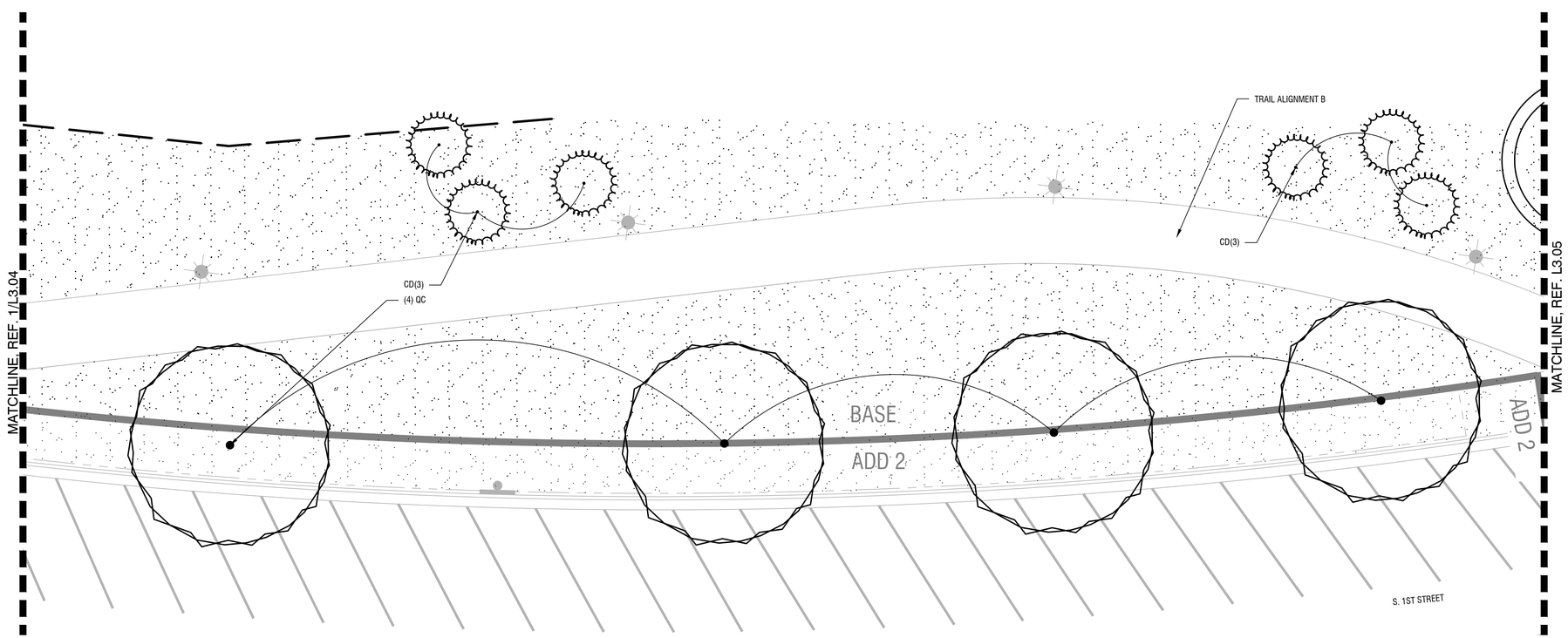

2 **PLANTING PLAN - TRAIL ALIGNMENT B**
SCALE: 1"= 10'-0"

PLANTING NOTES

1. DO NOT BEGIN PLANTING UNTIL IRRIGATION SYSTEM IS INSTALLED, TESTED AND APPROVED BY LANDSCAPE ARCHITECT.
2. DO NOT BEGIN PLANTING UNTIL SOIL PREPARATION IS COMPLETE AND APPROVED BY LANDSCAPE ARCHITECT. TOPSOIL DEPTH WITHIN SHRUB AREAS IS 24 INCHES DEPTH WITH 2 INCHES MULCH TOP DRESSING. PLANTING SOIL WITHIN LAWN AREAS IS 9 INCHES.
3. LOCATE PLANTS AS DIMENSIONED ON THE PLANS AND AS SHOWN IN THE PLANT SCHEDULE. PLANT SPACING IS MEASURED CENTER TO CENTER. PLANT LOCATIONS MAY BE ADJUSTED BY THE LANDSCAPE ARCHITECT TO MEET FIELD CONDITIONS.
4. VERIFY ALL QUANTITIES AND VARIETIES SHOWN ON THE DRAWINGS PRIOR TO ORDERING. OWNER MUST APPROVE ANY NECESSARY SUBSTITUTIONS DURING SUBMITTALS PROCESS. REVIEW PROCESS TO BE ESTABLISHED AT PRE-CONSTRUCTION MEETING.
5. THOROUGHLY WATER IN ALL PLANTS WITHIN 6 HOURS OF PLANTING.
6. APPLY SPECIFIED MULCH OVER PLANTING AREAS WITHIN TWO DAYS OF INSTALLING PLANTS, UNLESS OTHERWISE NOTED.
7. ALL PLANTS ARE REQUIRED TO MEET AMERICAN STANDARD FOR NURSERY STOCK, ANSI Z60.1-2014.
8. TO CALCULATE THE QUANTITY OF PLANTS PER AREA, USE THE FOLLOWING SPACING MULTIPLIERS:

TRIANGULAR SPACING	6"	12"	15"	18"	24"	30"	36"	48"

PRELIMINARY

Mayer/Reed
Mayer/Reed, Inc.
319 SW Washington St.
Suite 820
Portland, Oregon 97204
503.223.5953

S. 1ST AND STRAND STREETS ROAD AND UTILITY EXTENSIONS
ST. HELENS, OREGON
PLANTING PLANS

PLANTING PLANS

TITLE

#	DATE	DESCRIPTION

REVISIONS

DATUM

MS — DRAWN BY
SVS — CHECKED BY

90% DESIGN
STATUS

JANUARY 10, 2021
DATE

19823
PROJECT NUMBER

L3.04

© 2021 OTAK, INC.

If this drawing is not 22" x 34", it has been reduced/enlarged. Scale accordingly.

Plotted: Jan 07, 2022 - 7:38pm mschaerer M:\11 LA PROJECTS\SHS-210142\ DRAWINGS\1. CAD\4. SHEETS\L300-Planting Plans.dwg Layout Name: L3.04

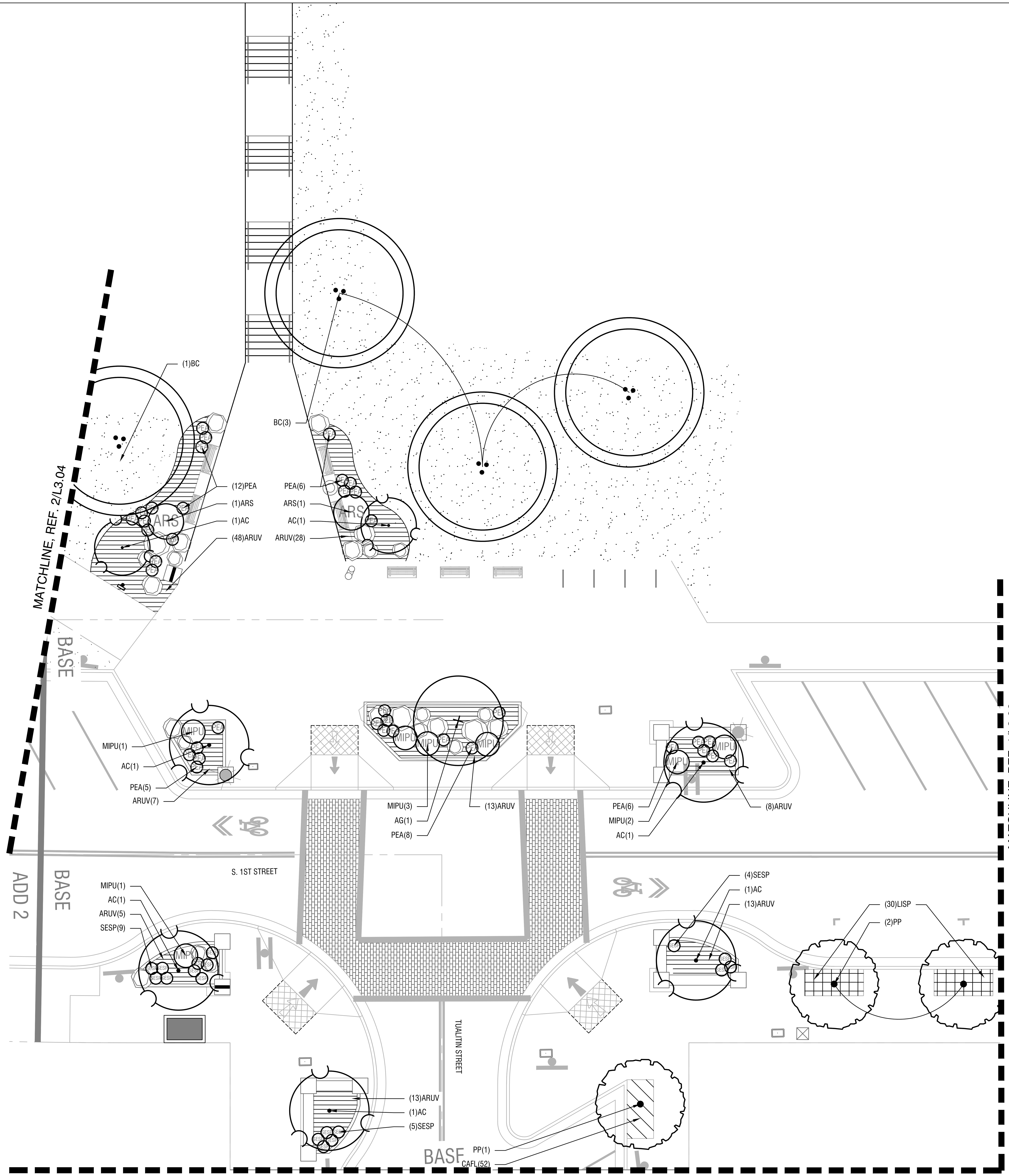

1 **PLANTING PLAN - BLUFF TRAIL NORTH TERMINUS**
SCALE: 1"= 10'-0"

PLANTING NOTES

1. DO NOT BEGIN PLANTING UNTIL IRRIGATION SYSTEM IS INSTALLED, TESTED AND APPROVED BY LANDSCAPE ARCHITECT.
2. DO NOT BEGIN PLANTING UNTIL SOIL PREPARATION IS COMPLETE AND APPROVED BY LANDSCAPE ARCHITECT. TOPSOIL DEPTH WITHIN SHRUB AREAS IS 24 INCHES DEPTH WITH 2 INCHES MULCH TOP DRESSING. PLANTING SOIL WITHIN LAWN AREAS IS 9 INCHES.
3. LOCATE PLANTS AS DIMENSIONED ON THE PLANS AND AS SHOWN IN THE PLANT SCHEDULE. PLANT SPACING IS MEASURED CENTER TO CENTER. PLANT LOCATIONS MAY BE ADJUSTED BY THE LANDSCAPE ARCHITECT TO MEET FIELD CONDITIONS.
4. VERIFY ALL QUANTITIES AND VARIETIES SHOWN ON THE DRAWINGS PRIOR TO ORDERING. OWNER MUST APPROVE ANY NECESSARY SUBSTITUTIONS DURING SUBMITTALS PROCESS. REVIEW PROCESS TO BE ESTABLISHED AT PRE-CONSTRUCTION MEETING.
5. THOROUGHLY WATER IN ALL PLANTS WITHIN 6 HOURS OF PLANTING.
6. APPLY SPECIFIED MULCH OVER PLANTING AREAS WITHIN TWO DAYS OF INSTALLING PLANTS, UNLESS OTHERWISE NOTED.
7. ALL PLANTS ARE REQUIRED TO MEET AMERICAN STANDARD FOR NURSERY STOCK, ANSI Z60.1-2014.
8. TO CALCULATE THE QUANTITY OF PLANTS PER AREA, USE THE FOLLOWING SPACING MULTIPLIERS:

PRELIMINARY

Mayer/Reed
Mayer/Reed, Inc.
319 SW Washington St.
Suite 820
Portland, Oregon 97204
503.223.5953

S. 1ST AND STRAND STREETS ROAD AND UTILITY EXTENSIONS
ST. HELENS, OREGON
PLANTING PLANS

PLANTING PLANS

TITLE

#	DATE	DESCRIPTION

REVISIONS

DATUM

MS — DRAWN BY
SVS — CHECKED BY

90% DESIGN — STATUS

JANUARY 10, 2021 — DATE

19823 — PROJECT NUMBER

L3.05

© 2021 OTAK, INC.
If this drawing is not 22" x 34", it has been reduced/enlarged. Scale accordingly.
Plotted: Jan 07, 2022 - 7:38pm mscherer M:\1 LA PROJECTS\SHS-210142 DRAWINGS\1 CAD\4 SHEETS\L300-Planting Plans.dwg Layout Name: L3.05

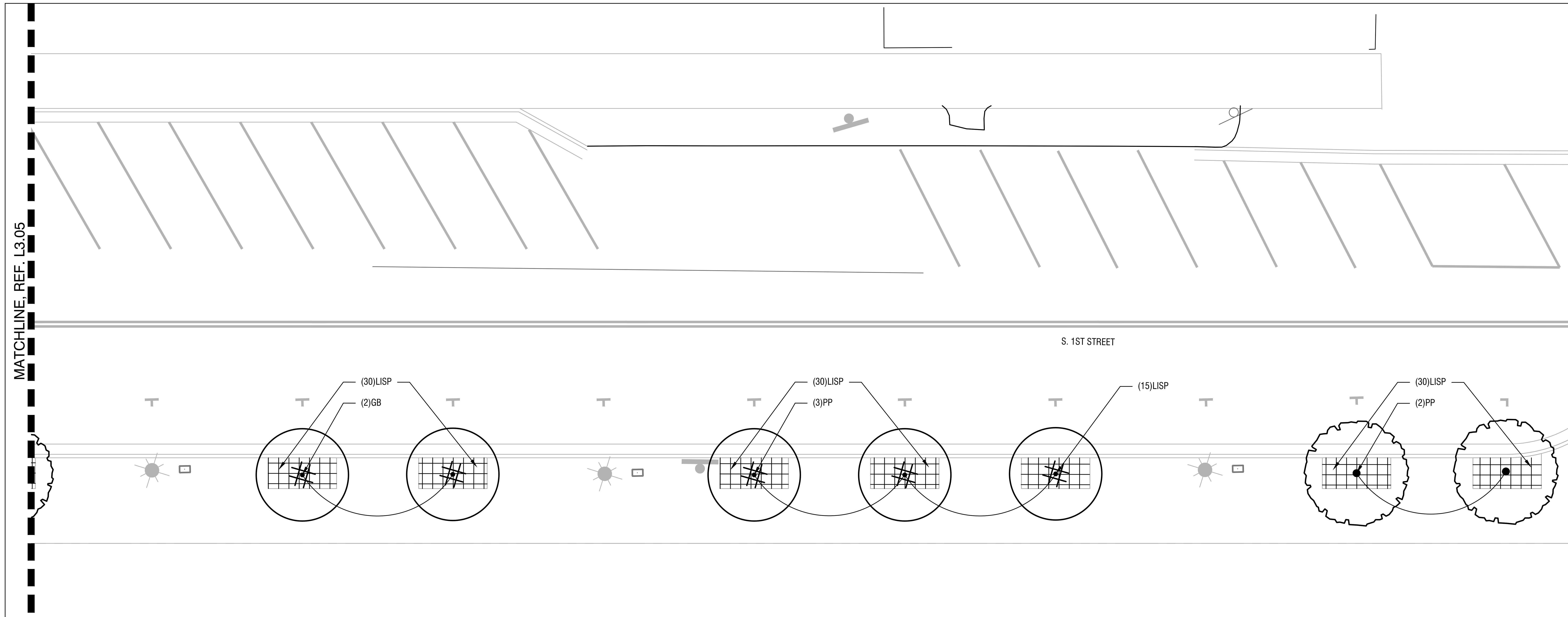

1 PLANTING PLAN - S. 1ST STREET
SCALE: 1"= 10'-0"

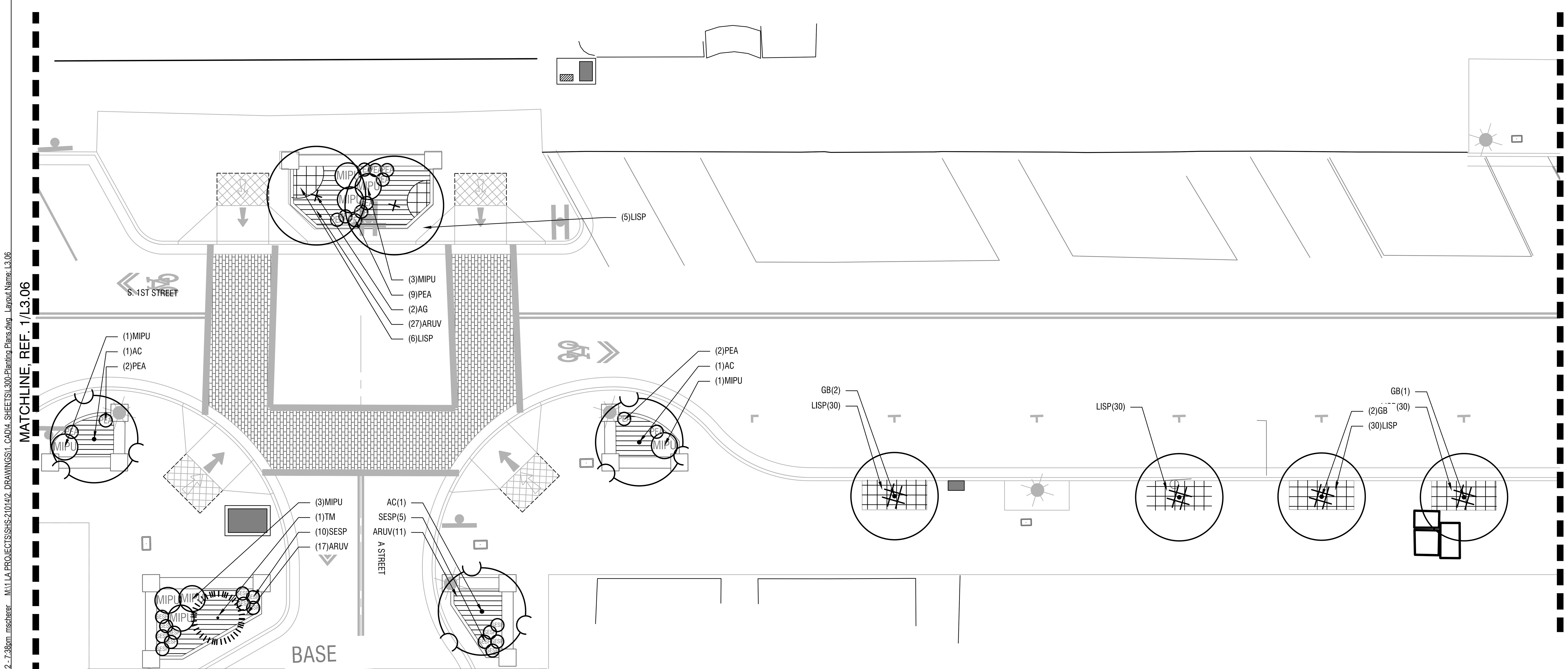

2 PLANTING PLAN - 1ST STREET & A STREET
SCALE: 1"= 10'-0"

PLANTING NOTES

1. DO NOT BEGIN PLANTING UNTIL IRRIGATION SYSTEM IS INSTALLED, TESTED AND APPROVED BY LANDSCAPE ARCHITECT.
2. DO NOT BEGIN PLANTING UNTIL SOIL PREPARATION IS COMPLETE AND APPROVED BY LANDSCAPE ARCHITECT. TOPSOIL DEPTH WITHIN SHRUB AREAS IS 24 INCHES DEPTH WITH 2 INCHES MULCH TOP DRESSING. PLANTING SOIL WITHIN LAWN AREAS IS 9 INCHES.
3. LOCATE PLANTS AS DIMENSIONED ON THE PLANS AND AS SHOWN IN THE PLANT SCHEDULE. PLANT SPACING IS MEASURED CENTER TO CENTER. PLANT LOCATIONS MAY BE ADJUSTED BY THE LANDSCAPE ARCHITECT TO MEET FIELD CONDITIONS.
4. VERIFY ALL QUANTITIES AND VARIETIES SHOWN ON THE DRAWINGS PRIOR TO ORDERING. OWNER MUST APPROVE ANY NECESSARY SUBSTITUTIONS DURING SUBMITTALS PROCESS. REVIEW PROCESS TO BE ESTABLISHED AT PRE-CONSTRUCTION MEETING.
5. THOROUGHLY WATER IN ALL PLANTS WITHIN 6 HOURS OF PLANTING.
6. APPLY SPECIFIED MULCH OVER PLANTING AREAS WITHIN TWO DAYS OF INSTALLING PLANTS, UNLESS OTHERWISE NOTED.
7. ALL PLANTS ARE REQUIRED TO MEET AMERICAN STANDARD FOR NURSERY STOCK, ANSI Z60.1-2014.
8. TO CALCULATE THE QUANTITY OF PLANTS PER AREA, USE THE FOLLOWING SPACING MULTIPLIERS:

PRELIMINARY

Mayer/Reed
Mayer/Reed, Inc.
319 SW Washington St.
Suite 820
Portland, Oregon 97204
503.223.5953

S. 1ST AND STRAND STREETS ROAD AND UTILITY EXTENSIONS
ST. HELENS, OREGON
PLANTING PLANS

PLANTING PLANS

TITLE

#	DATE	DESCRIPTION

REVISIONS

DATUM

MS	SVS
DRAWN BY	CHECKED BY

90% DESIGN
STATUS

JANUARY 10, 2021
DATE

19823
PROJECT NUMBER

L3.06

© 2021 OTAK, INC.

If this drawing is not 22" x 34", it has been reduced/enlarged. Scale accordingly.

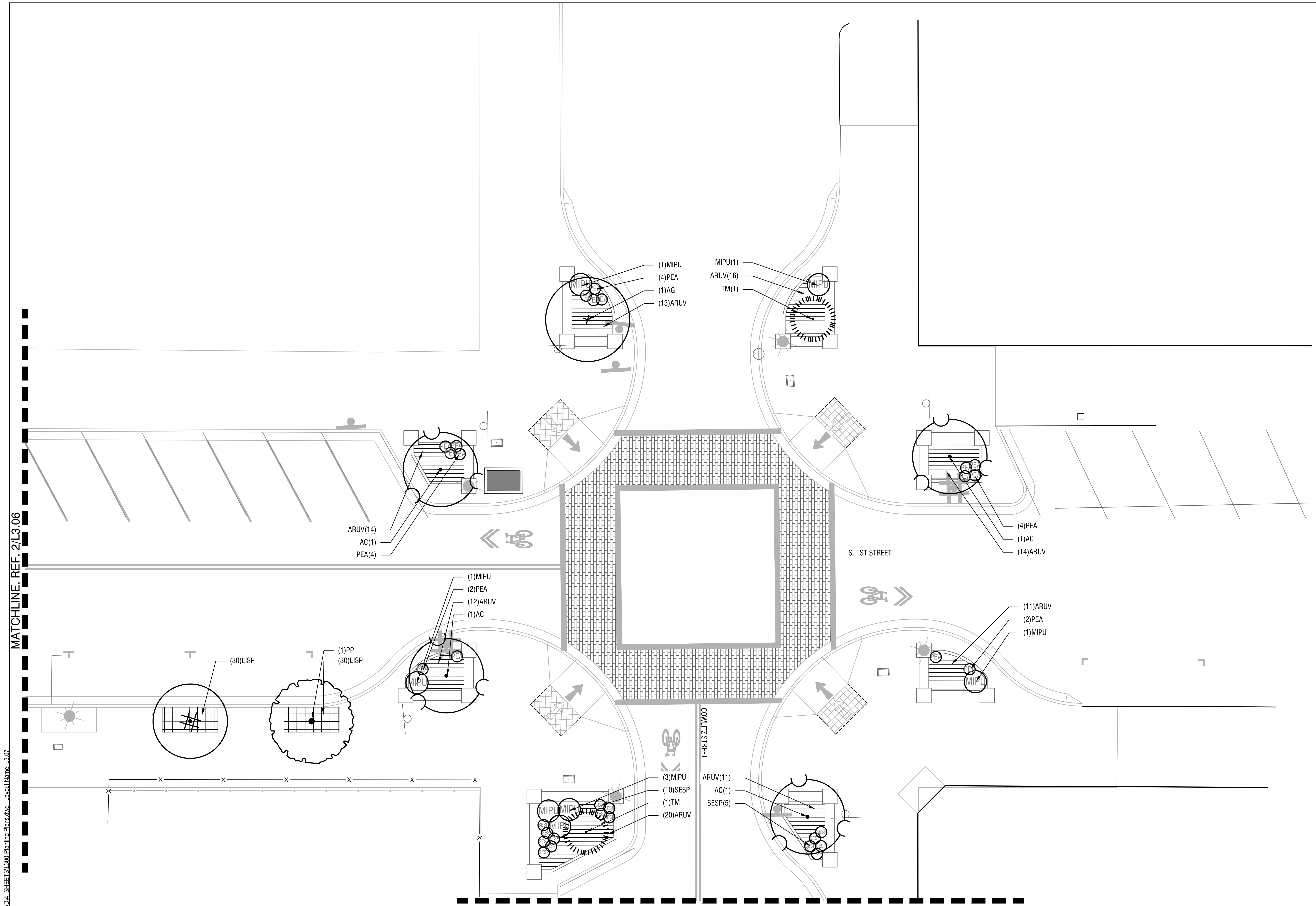

1 **PLANTING PLAN - S. 1ST STREET & COWLITZ STREET**

SCALE: 1"= 10'-0"

0 5' 10' 20'

N

PLANTING NOTES

1. DO NOT BEGIN PLANTING UNTIL IRRIGATION SYSTEM IS INSTALLED, TESTED AND APPROVED BY LANDSCAPE ARCHITECT.
2. DO NOT BEGIN PLANTING UNTIL SOIL PREPARATION IS COMPLETE AND APPROVED BY LANDSCAPE ARCHITECT. TOPSOIL DEPTH WITHIN SHRUB AREAS IS 24 INCHES DEPTH WITH 2 INCHES MULCH TOP DRESSING. PLANTING SOIL WITHIN LAWN AREAS IS 9 INCHES.
3. LOCATE PLANTS AS DIMENSIONED ON THE PLANS AND AS SHOWN IN THE PLANT SCHEDULE. PLANT SPACING IS MEASURED CENTER TO CENTER. PLANT LOCATIONS MAY BE ADJUSTED BY THE LANDSCAPE ARCHITECT TO MEET FIELD CONDITIONS.
4. VERIFY ALL QUANTITIES AND VARIETIES SHOWN ON THE DRAWINGS PRIOR TO ORDERING. OWNER MUST APPROVE ANY NECESSARY SUBSTITUTIONS DURING SUBMITTALS PROCESS. REVIEW PROCESS TO BE ESTABLISHED AT PRE-CONSTRUCTION MEETING.
5. THOROUGHLY WATER IN ALL PLANTS WITHIN 6 HOURS OF PLANTING.
6. APPLY SPECIFIED MULCH OVER PLANTING AREAS WITHIN TWO DAYS OF INSTALLING PLANTS, UNLESS OTHERWISE NOTED.
7. ALL PLANTS ARE REQUIRED TO MEET AMERICAN STANDARD FOR NURSERY STOCK, ANSI Z60.1-2014.
8. TO CALCULATE THE QUANTITY OF PLANTS PER AREA, USE THE FOLLOWING SPACING MULTIPLIERS:

City of St. Helens
FOUNDED 1850

PRELIMINARY

Mayer/Reed

Mayer/Reed, Inc.
319 SW Washington St.
Suite 820
Portland, Oregon 97204
503.223.5953

S. 1ST AND STRAND STREETS ROAD AND UTILITY EXTENSIONS

ST. HELENS, OREGON
PLANTING PLANS

PLANTING PLANS

TITLE

#	DATE	DESCRIPTION

REVISIONS

DATUM

MS — DRAWN BY
SVS — CHECKED BY

90% DESIGN
STATUS

JANUARY 10, 2021
DATE

19823
PROJECT NUMBER

L3.07

© 2021 OTAK, INC.

If this drawing is not 22" x 34", it has been reduced/enlarged. Scale accordingly.

Plotted: Jan 07, 2022 - 7:38pm mscherer M:\1 LA PROJECTS\SHS-21014\2 DRAWINGS\1 CAD\4 SHEETS\L300-Planting Plans.dwg Layout Name: L3.07

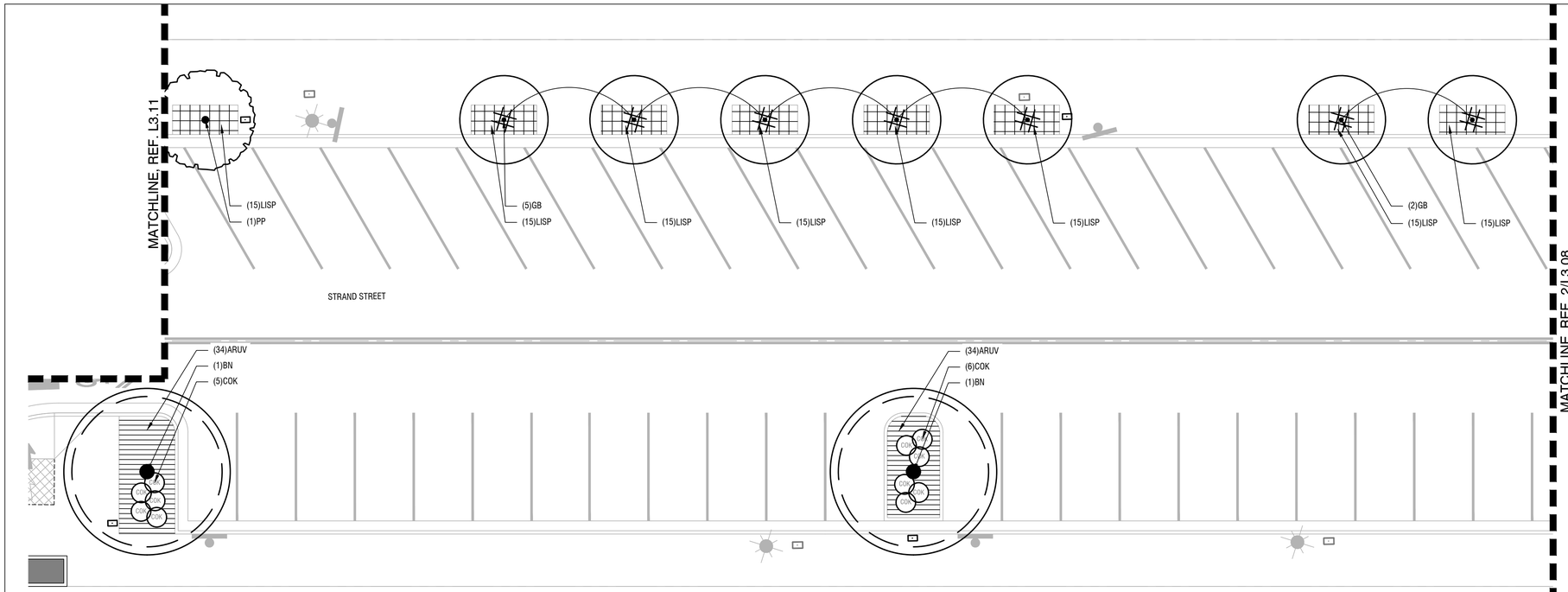

1 **PLANTING PLAN - STRAND STREET**
SCALE: 1"= 10'-0"

0 5' 10' 20'

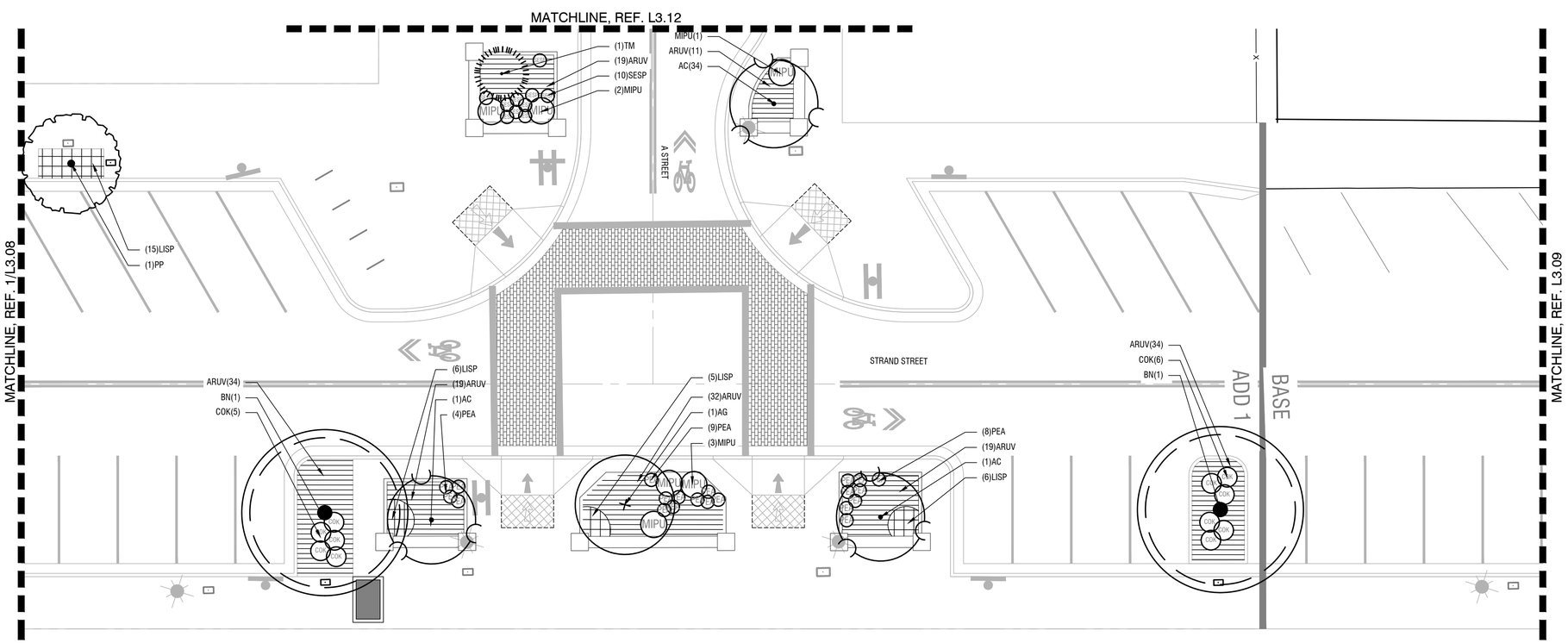

2 **PLANTING PLAN - STRAND STREET & A STREET**
SCALE: 1"= 10'-0"

0 5' 10' 20'

PLANTING NOTES

1. DO NOT BEGIN PLANTING UNTIL IRRIGATION SYSTEM IS INSTALLED, TESTED AND APPROVED BY LANDSCAPE ARCHITECT.
2. DO NOT BEGIN PLANTING UNTIL SOIL PREPARATION IS COMPLETE AND APPROVED BY LANDSCAPE ARCHITECT. TOPSOIL DEPTH WITHIN SHRUB AREAS IS 24 INCHES DEPTH WITH 2 INCHES MULCH TOP DRESSING. PLANTING SOIL WITHIN LAWN AREAS IS 9 INCHES.
3. LOCATE PLANTS AS DIMENSIONED ON THE PLANS AND AS SHOWN IN THE PLANT SCHEDULE. PLANT SPACING IS MEASURED CENTER TO CENTER. PLANT LOCATIONS MAY BE ADJUSTED BY THE LANDSCAPE ARCHITECT TO MEET FIELD CONDITIONS.
4. VERIFY ALL QUANTITIES AND VARIETIES SHOWN ON THE DRAWINGS PRIOR TO ORDERING. OWNER MUST APPROVE ANY NECESSARY SUBSTITUTIONS DURING SUBMITTALS PROCESS. REVIEW PROCESS TO BE ESTABLISHED AT PRE-CONSTRUCTION MEETING.
5. THOROUGHLY WATER IN ALL PLANTS WITHIN 6 HOURS OF PLANTING.
6. APPLY SPECIFIED MULCH OVER PLANTING AREAS WITHIN TWO DAYS OF INSTALLING PLANTS, UNLESS OTHERWISE NOTED.
7. ALL PLANTS ARE REQUIRED TO MEET AMERICAN STANDARD FOR NURSERY STOCK, ANSI Z60.1-2014.
8. TO CALCULATE THE QUANTITY OF PLANTS PER AREA, USE THE FOLLOWING SPACING MULTIPLIERS:

PRELIMINARY

Mayer/Reed
Mayer/Reed, Inc.
319 SW Washington St.
Suite 820
Portland, Oregon 97204
503.223.5953

S. 1ST AND STRAND STREETS ROAD AND UTILITY EXTENSIONS
ST. HELENS, OREGON
PLANTING PLANS

PLANTING PLANS

TITLE

#	DATE	DESCRIPTION

REVISIONS

DATUM

MS — DRAWN BY
SVS — CHECKED BY

90% DESIGN
STATUS

JANUARY 10, 2021
DATE

19823
PROJECT NUMBER

L3.08

© 2021 OTAK, INC.

If this drawing is not 22" x 34", it has been reduced/enlarged. Scale accordingly.

Plotted: Jan 07, 2022 - 7:38pm mschaner M:\11.LA.PROJECTS\SHS-210142_DRAWINGS\1. CAD\4. SHEETS\300-Planting Plans.dwg Layout Name: L3.08

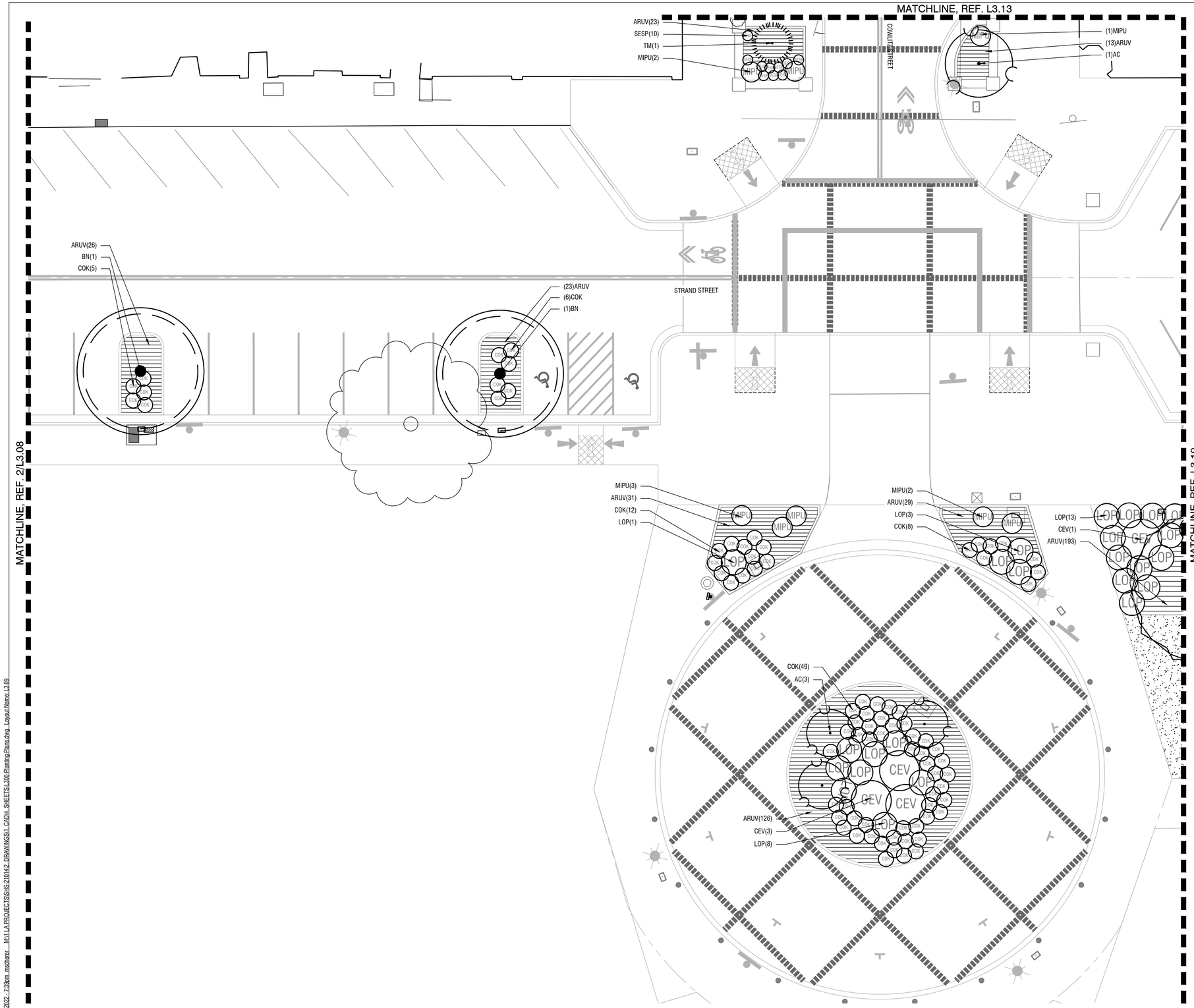

1 **PLANTING PLAN - STRAND STREET & COWLITZ STREET**
SCALE: 1"= 10'-0"

PLANTING NOTES

1. DO NOT BEGIN PLANTING UNTIL IRRIGATION SYSTEM IS INSTALLED, TESTED AND APPROVED BY LANDSCAPE ARCHITECT.
2. DO NOT BEGIN PLANTING UNTIL SOIL PREPARATION IS COMPLETE AND APPROVED BY LANDSCAPE ARCHITECT. TOPSOIL DEPTH WITHIN SHRUB AREAS IS 24 INCHES DEPTH WITH 2 INCHES MULCH TOP DRESSING. PLANTING SOIL WITHIN LAWN AREAS IS 9 INCHES.
3. LOCATE PLANTS AS DIMENSIONED ON THE PLANS AND AS SHOWN IN THE PLANT SCHEDULE. PLANT SPACING IS MEASURED CENTER TO CENTER. PLANT LOCATIONS MAY BE ADJUSTED BY THE LANDSCAPE ARCHITECT TO MEET FIELD CONDITIONS.
4. VERIFY ALL QUANTITIES AND VARIETIES SHOWN ON THE DRAWINGS PRIOR TO ORDERING. OWNER MUST APPROVE ANY NECESSARY SUBSTITUTIONS DURING SUBMITTALS PROCESS. REVIEW PROCESS TO BE ESTABLISHED AT PRE-CONSTRUCTION MEETING.
5. THOROUGHLY WATER IN ALL PLANTS WITHIN 6 HOURS OF PLANTING.
6. APPLY SPECIFIED MULCH OVER PLANTING AREAS WITHIN TWO DAYS OF INSTALLING PLANTS, UNLESS OTHERWISE NOTED.
7. ALL PLANTS ARE REQUIRED TO MEET AMERICAN STANDARD FOR NURSERY STOCK, ANSI Z60.1-2014.
8. TO CALCULATE THE QUANTITY OF PLANTS PER AREA, USE THE FOLLOWING SPACING MULTIPLIERS:

PRELIMINARY

Mayer/Reed
Mayer/Reed, Inc.
319 SW Washington St.
Suite 820
Portland, Oregon 97204
503.223.5953

S. 1ST AND STRAND STREETS ROAD AND UTILITY EXTENSIONS

ST. HELENS, OREGON
PLANTING PLANS

PLANTING PLANS

TITLE

#	DATE	DESCRIPTION

REVISIONS

DATUM

MS — DRAWN BY
SVS — CHECKED BY

90% DESIGN — STATUS

JANUARY 10, 2021 — DATE

19823 — PROJECT NUMBER

L3.09

© 2021 OTAK, INC.

If this drawing is not 22" x 34", it has been reduced/enlarged. Scale accordingly.

Plotted: Jan 07, 2022 - 7:38pm mscherer M:\11 LA PROJECTS\SHS-210149\2_DRAWINGS\1_CAD\4_SHEETS\L300-Planting Plans.dwg Layout Name: L3.09

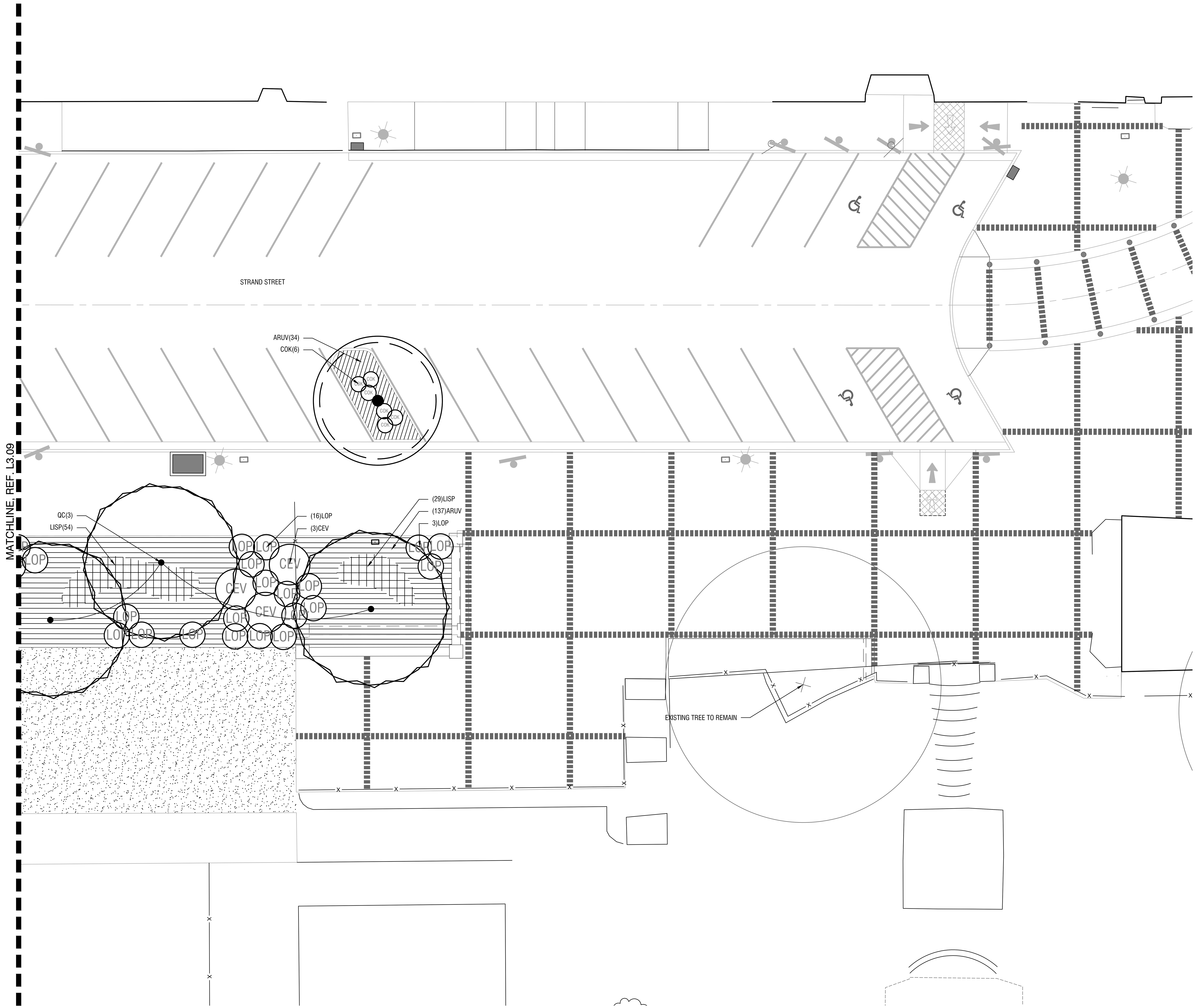

1 **PLANTING PLAN - STRAND STREET**
SCALE: 1"= 10'-0"

0 5' 10' 20'

N

PLANTING NOTES

1. DO NOT BEGIN PLANTING UNTIL IRRIGATION SYSTEM IS INSTALLED, TESTED AND APPROVED BY LANDSCAPE ARCHITECT.
2. DO NOT BEGIN PLANTING UNTIL SOIL PREPARATION IS COMPLETE AND APPROVED BY LANDSCAPE ARCHITECT. TOPSOIL DEPTH WITHIN SHRUB AREAS IS 24 INCHES DEPTH WITH 2 INCHES MULCH TOP DRESSING. PLANTING SOIL WITHIN LAWN AREAS IS 9 INCHES.
3. LOCATE PLANTS AS DIMENSIONED ON THE PLANS AND AS SHOWN IN THE PLANT SCHEDULE. PLANT SPACING IS MEASURED CENTER TO CENTER. PLANT LOCATIONS MAY BE ADJUSTED BY THE LANDSCAPE ARCHITECT TO MEET FIELD CONDITIONS.
4. VERIFY ALL QUANTITIES AND VARIETIES SHOWN ON THE DRAWINGS PRIOR TO ORDERING. OWNER MUST APPROVE ANY NECESSARY SUBSTITUTIONS DURING SUBMITTALS PROCESS. REVIEW PROCESS TO BE ESTABLISHED AT PRE-CONSTRUCTION MEETING.
5. THOROUGHLY WATER IN ALL PLANTS WITHIN 6 HOURS OF PLANTING.
6. APPLY SPECIFIED MULCH OVER PLANTING AREAS WITHIN TWO DAYS OF INSTALLING PLANTS, UNLESS OTHERWISE NOTED.
7. ALL PLANTS ARE REQUIRED TO MEET AMERICAN STANDARD FOR NURSERY STOCK, ANSI Z60.1-2014.
8. TO CALCULATE THE QUANTITY OF PLANTS PER AREA, USE THE FOLLOWING SPACING MULTIPLIERS:

PRELIMINARY

Mayer/Reed
Mayer/Reed, Inc.
319 SW Washington St.
Suite 820
Portland, Oregon 97204
503.223.5953

S. 1ST AND STRAND STREETS ROAD AND UTILITY EXTENSIONS
ST. HELENS, OREGON
PLANTING PLANS

TITLE
PLANTING PLANS

#	DATE	DESCRIPTION

REVISIONS

DATUM

MS — DRAWN BY
SVS — CHECKED BY

90% DESIGN — STATUS

JANUARY 10, 2021 — DATE

19823 — PROJECT NUMBER

L3.10

© 2021 OTAK, INC.
If this drawing is not 22" x 34", it has been reduced/enlarged. Scale accordingly.

Plotted: Jan 07, 2022 - 7:39pm mscherer M:\1 LA PROJECTS\SHS-21014\2 DRAWINGS\1 CAD\4 SHEETS\L300-Planting Plans.dwg Layout Name: L3.10

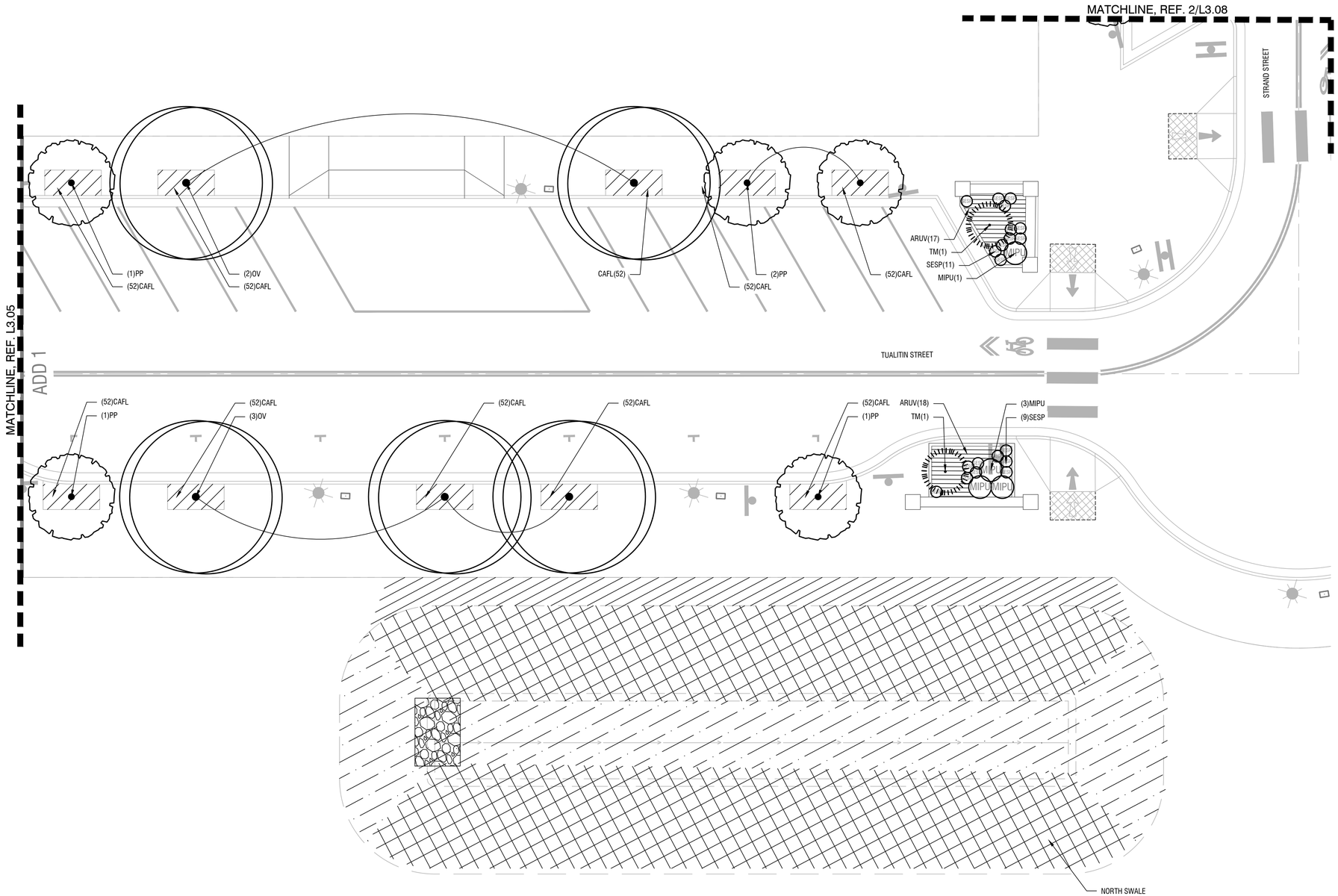

PLANTING NOTES

1. DO NOT BEGIN PLANTING UNTIL IRRIGATION SYSTEM IS INSTALLED, TESTED AND APPROVED BY LANDSCAPE ARCHITECT.
2. DO NOT BEGIN PLANTING UNTIL SOIL PREPARATION IS COMPLETE AND APPROVED BY LANDSCAPE ARCHITECT. TOPSOIL DEPTH WITHIN SHRUB AREAS IS 24 INCHES DEPTH WITH 2 INCHES MULCH TOP DRESSING. PLANTING SOIL WITHIN LAWN AREAS IS 9 INCHES.
3. LOCATE PLANTS AS DIMENSIONED ON THE PLANS AND AS SHOWN IN THE PLANT SCHEDULE. PLANT SPACING IS MEASURED CENTER TO CENTER. PLANT LOCATIONS MAY BE ADJUSTED BY THE LANDSCAPE ARCHITECT TO MEET FIELD CONDITIONS.
4. VERIFY ALL QUANTITIES AND VARIETIES SHOWN ON THE DRAWINGS PRIOR TO ORDERING. OWNER MUST APPROVE ANY NECESSARY SUBSTITUTIONS DURING SUBMITTALS PROCESS. REVIEW PROCESS TO BE ESTABLISHED AT PRE-CONSTRUCTION MEETING.
5. THOROUGHLY WATER IN ALL PLANTS WITHIN 6 HOURS OF PLANTING.
6. APPLY SPECIFIED MULCH OVER PLANTING AREAS WITHIN TWO DAYS OF INSTALLING PLANTS, UNLESS OTHERWISE NOTED.
7. ALL PLANTS ARE REQUIRED TO MEET AMERICAN STANDARD FOR NURSERY STOCK, ANSI Z60.1-2014.
8. TO CALCULATE THE QUANTITY OF PLANTS PER AREA, USE THE FOLLOWING SPACING MULTIPLIERS:

TRIANGULAR SPACING	6"	12"	15"	18"	24"	30"	36"	48"

1 PLANTING PLAN - STRAND STREET & TUALITIN STREET
SCALE: 1"= 10'-0"

0 5' 10' 20'

N

PRELIMINARY

Mayer/Reed
Mayer/Reed, Inc.
319 SW Washington St.
Suite 820
Portland, Oregon 97204
503.223.5953

S. 1ST AND STRAND STREETS ROAD AND UTILITY EXTENSIONS

ST. HELENS, OREGON
PLANTING PLANS

PLANTING PLANS

TITLE

#	DATE	DESCRIPTION

REVISIONS

DATUM

MS — DRAWN BY
SVS — CHECKED BY

90% DESIGN
STATUS

JANUARY 10, 2021
DATE

19823
PROJECT NUMBER

L3.11

© 2021 OTAK, INC.

If this drawing is not 22" x 34", it has been reduced/enlarged. Scale accordingly.

Plotted: Jan 07, 2022 - 7:38pm, mscherer M:\11 LA PROJECTS\SHS-210149_DRAWINGS\1_CAD\4_SHEETS\L300-Planting Plans.dwg Layout Name: L3.11

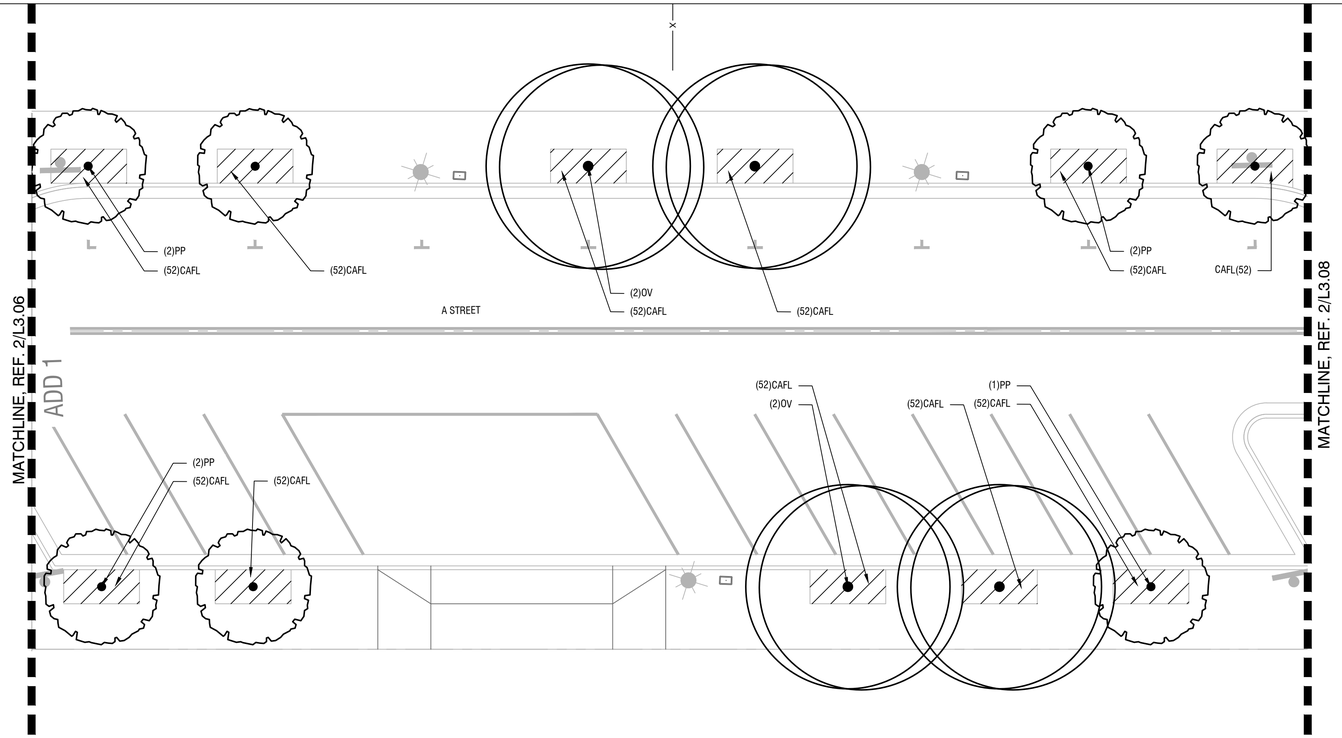

1 **PLANTING PLAN - A STREET**
SCALE: 1"= 10'-0"

0 5' 10' 20'

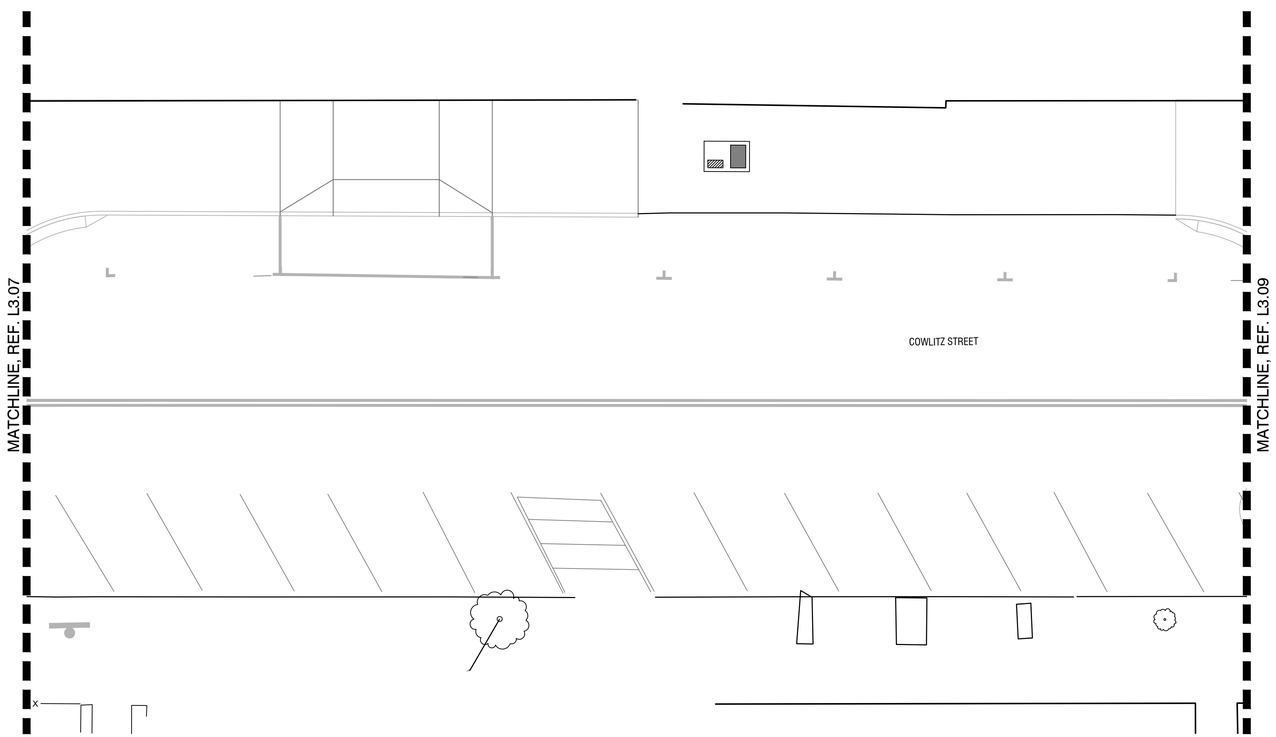

2 **PLANTING PLAN - COWLITZ STREET**
SCALE: 1"= 10'-0"

0 5' 10' 20'

PLANTING NOTES

1. DO NOT BEGIN PLANTING UNTIL IRRIGATION SYSTEM IS INSTALLED, TESTED AND APPROVED BY LANDSCAPE ARCHITECT.
2. DO NOT BEGIN PLANTING UNTIL SOIL PREPARATION IS COMPLETE AND APPROVED BY LANDSCAPE ARCHITECT. TOPSOIL DEPTH WITHIN SHRUB AREAS IS 24 INCHES DEPTH WITH 2 INCHES MULCH TOP DRESSING. PLANTING SOIL WITHIN LAWN AREAS IS 9 INCHES.
3. LOCATE PLANTS AS DIMENSIONED ON THE PLANS AND AS SHOWN IN THE PLANT SCHEDULE. PLANT SPACING IS MEASURED CENTER TO CENTER. PLANT LOCATIONS MAY BE ADJUSTED BY THE LANDSCAPE ARCHITECT TO MEET FIELD CONDITIONS.
4. VERIFY ALL QUANTITIES AND VARIETIES SHOWN ON THE DRAWINGS PRIOR TO ORDERING. OWNER MUST APPROVE ANY NECESSARY SUBSTITUTIONS DURING SUBMITTALS PROCESS. REVIEW PROCESS TO BE ESTABLISHED AT PRE-CONSTRUCTION MEETING.
5. THOROUGHLY WATER IN ALL PLANTS WITHIN 6 HOURS OF PLANTING.
6. APPLY SPECIFIED MULCH OVER PLANTING AREAS WITHIN TWO DAYS OF INSTALLING PLANTS, UNLESS OTHERWISE NOTED.
7. ALL PLANTS ARE REQUIRED TO MEET AMERICAN STANDARD FOR NURSERY STOCK, ANSI Z60.1-2014.
8. TO CALCULATE THE QUANTITY OF PLANTS PER AREA, USE THE FOLLOWING SPACING MULTIPLIERS:

PRELIMINARY

Mayer/Reed
Mayer/Reed, Inc.
319 SW Washington St.
Suite 820
Portland, Oregon 97204
503.223.5953

S. 1ST AND STRAND STREETS ROAD AND UTILITY EXTENSIONS
ST. HELENS, OREGON
PLANTING PLANS

PLANTING PLANS

TITLE

#	DATE	DESCRIPTION

REVISIONS

DATUM

MS — DRAWN BY
SVS — CHECKED BY

90% DESIGN
STATUS

JANUARY 10, 2021
DATE

19823
PROJECT NUMBER

L3.12

© 2021 OTAK, INC.

If this drawing is not 22" x 34", it has been reduced/enlarged. Scale accordingly.

Plotted: Jan 07, 2022 - 7:39pm mscherer M:\1LA PROJECTS\SHS-210142_DRAWINGS\1_CAD\4_SHEETS\L-300-Planting Plans.dwg Layout Name: L3.12

PLANT LEGEND

TREES

SYMBOL	CODE	BOTANICAL NAME	COMMON NAME	SIZE	NOTES
	AC	ACER CIRCINATUM 'MONROE'	MONROE'S VINE MAPLE	10'/ B&B	MULTI-STEM, MIN. 3-5 STEMS AT BASE
	AG	ACER GINNALA 'FLAME'	AMUR MAPLE	2" CAL./B&B	BRANCHED AT 6' HT.
	BC	BETULA NIGRA 'CULLY'	HERITAGE RIVER BIRCH	2" CAL./B&B	MULTI-STEM, MIN. 3 STEMS AT BASE
	BN	BETULA NIGRA 'CULLY'	HERITAGE RIVER BIRCH	2" CAL./B&B	SINGLE TRUNK, BRANCHED AT 6' HT.
	CD	CALOCEDRUS DECURRENS	INCENSE CEDAR	10'-12' HT/B&B	STRONG CENTRAL LEADER
	CE	CORNUS X 'EDDIE'S WHITE WONDER'	EDDIE'S WHITE WONDER DOGWOOD	2" CAL./B&B	BRANCHED AT 6' HT.
	GB	GINKGO BILOBA 'PRINCETON SENTRY'	PRINCETON SENTRY GINKGO	2" CAL./B&B	BRANCHED AT 6' HT.
	OV	OSTRYA VIRGINIANA	HOP HORNBEAM	2" CAL./B&B	BRANCHED AT 6' HT.
	PP	PARROTIA PERSICA 'VANESSA'	VANESSA IRONWOOD	2" CAL./B&B	BRANCHED AT 6' HT.
	QC	QUERCUS COCCINEA	SCARLETT OAK	2" CAL./B&B	BRANCHED AT 6' HT.
	TM	TSUGA MERTENSIANA	TSUGA MERTENSIANA	TSUGA MERTENSIANA	STRONG CENTRAL LEADER
	AU	ARBUTUS UNEDO	STRAWBERRY TREE	15 GAL.	NO SUMMER WATER AFTER ESTABLISHMENT

SHRUBS

SYMBOL	CODE	BOTANICAL NAME	COMMON NAME	SPACING	SIZE	NOTES
ARS	ARS	ARCTOSTAPHYLOS 'SUNSET'	SUNSET MANZANITA		5 GAL	
LOP	LOP	LONICERA PILEATA 'ROYAL CARPET'	ROYAL CARPET BOXLEAF HONEYSUCKLE		5 GAL	
CEV	CEV	CEANOTHUS 'VICTORIA'	VICTORIA CALIFORNIA LILAC		5 GAL	
CF	COF	CORNUS SERICEA `FARROW`	ARCTIC FIRE DOGWOOD		2GAL	
	COK	CORNUS SERICEA `KELSEYI`	KELSEY DOGWOOD		3 GAL	
MOC	MOC	MORELLA CALIFORNICA	PACIFIC WAXMYRTLE		5 GAL	
	PEA	PEROVSKIA ATRIPLICIFOLIA 'LITTLE SPIRE'	LITTLE SPIRE RUSSIAN SAGE		3 GAL	
KF	RIS	RIBES SANGUINEUM 'KING EDWARD VII'	KING EDWARD FLOWERING CURRANT		5 GAL	
	VAO	VACCINIUM OVATUM	EVERGREEN HUCKLEBERRY		3 GAL	

FERNS, GRASSES, AND BULBS

SYMBOL	CODE	BOTANICAL NAME	COMMON NAME	SPACING	SIZE	NOTES
MP	MIPU	MISCANTHUS 'PURPURASCENS'	FLAME GRASS		3 GAL	
	PEAL	PENNISETUM ALOPECUROIDES `LITTLE BUNNY`	LITTLE BUNNY FOUNTAIN GRASS		1 GAL	
	SESP	SEDUM SPECTABILE 'AUTUMN JOY'	AUTUMN JOY STONECROP		1 GAL	

GROUNDCOVERS, MIXES, AND SEED

SYMBOL	CODE	BOTANICAL NAME	COMMON NAME	SPACING	SIZE	NOTES
	CAFL	CAREX FLACCA	BLUE SEDGE	12" o.c.	1 GAL.	
	ARUV	ARCTOSTAPHYLOS UVA-URSI	KINNICKINNICK	24" o.c.	1 GAL.	
	CEGL	CEANOTHUS GLORIOSUS 'PT. REYES'	POINT REYES CEANOTHUS	30" o.c.	1 GAL.	MIN. WATER AFTER 1ST YR.
	LISP	LIRIOPE SPICATA	SPREADING LIRIOPE	18" o.c.	1 GAL.	
	RUCA	RUBUS CALYCINOIDES `EMERALD CARPET`	EMERALD CARPET CREEPING RASPBERRY	24" o.c.	1 GAL.	
	SWA	NATIVE SEED	REF. SPECS			
	SWB					
		ARBUTUS UNEDO	STRAWBERRY TREE	12' o.c.	5 GAL.	
		CORNUS SERICEA `KELSEYI`	KELSEY DOGWOOD	24" o.c.	3 GAL.	GROUPS OF 3 6' O.C.
		MAHONIA REPENS	CREEPING OREGON GRAPE	24" o.c.	1 GAL.	GROUPS OF 5 10' O.C.
		RUBUS CALYCINOIDES 'EMERALD CARPET'	EMERALD CARPET CREEPING RASPBERRY	24" o.c.	1 GAL.	
	SL	SEEDED LAWN		REF. SPECS		
	SM	NATIVE MEADOW		REF. SPECS		

PLANTING NOTES

1. DO NOT BEGIN PLANTING UNTIL IRRIGATION SYSTEM IS INSTALLED, TESTED AND APPROVED BY LANDSCAPE ARCHITECT.
2. DO NOT BEGIN PLANTING UNTIL SOIL PREPARATION IS COMPLETE AND APPROVED BY LANDSCAPE ARCHITECT. TOPSOIL DEPTH WITHIN SHRUB AREAS IS 24 INCHES DEPTH WITH 2 INCHES MULCH TOP DRESSING. PLANTING SOIL WITHIN LAWN AREAS IS 9 INCHES.
3. LOCATE PLANTS AS DIMENSIONED ON THE PLANS AND AS SHOWN IN THE PLANT SCHEDULE. PLANT SPACING IS MEASURED CENTER TO CENTER. PLANT LOCATIONS MAY BE ADJUSTED BY THE LANDSCAPE ARCHITECT TO MEET FIELD CONDITIONS.
4. VERIFY ALL QUANTITIES AND VARIETIES SHOWN ON THE DRAWINGS PRIOR TO ORDERING. OWNER MUST APPROVE ANY NECESSARY SUBSTITUTIONS DURING SUBMITTALS PROCESS. REVIEW PROCESS TO BE ESTABLISHED AT PRE-CONSTRUCTION MEETING.
5. THOROUGHLY WATER IN ALL PLANTS WITHIN 6 HOURS OF PLANTING.
6. APPLY SPECIFIED MULCH OVER PLANTING AREAS WITHIN TWO DAYS OF INSTALLING PLANTS, UNLESS OTHERWISE NOTED.
7. ALL PLANTS ARE REQUIRED TO MEET AMERICAN STANDARD FOR NURSERY STOCK, ANSI Z60.1-2014.
8. TO CALCULATE THE QUANTITY OF PLANTS PER AREA, USE THE FOLLOWING SPACING MULTIPLIERS:

TRIANGULAR SPACING	9"	12"	15"	18"	24"	30"	36"	48"
SQUARE FT MULTIPLIER	2.027	1.156	0.513	0.322	0.288	0.184	0.128	0.072

PRELIMINARY

Mayer/Reed

Mayer/Reed, Inc.
319 SW Washington St.
Suite 820
Portland, Oregon 97204
503.223.5953

S. 1ST AND STRAND STREETS ROAD AND UTILITY EXTENSIONS

ST. HELENS, OREGON
PLANTING PLANS

PLANTING SCHEDULE AND NOTES

TITLE

#	DATE	DESCRIPTION

REVISIONS

DATUM

MS — DRAWN BY
SVS — CHECKED BY

90% DESIGN
STATUS

JANUARY 10, 2021
DATE

19823
PROJECT NUMBER

L3.13

© 2021 OTAK, INC.

If this drawing is not 22" x 34", it has been reduced/enlarged. Scale accordingly.

Plotted: Jan 07, 2022 - 7:39pm mschaerer M:\11.LA.PROJECTS\SHS-210142_DRAWINGS\1. CAD\4. SHEETS\L300-Planting Plans.dwg Layout Name: L3.13

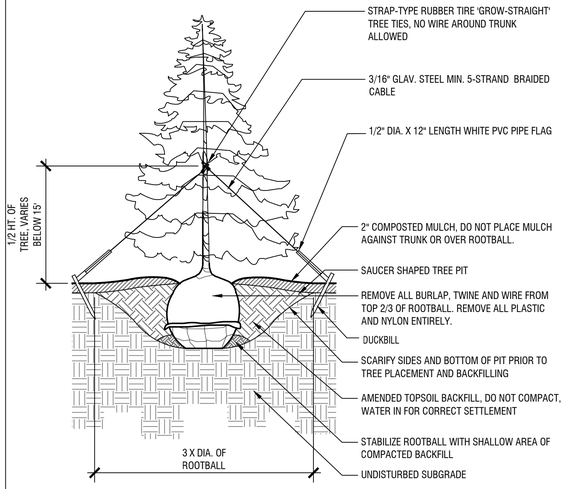

NOTE: SECURE TREE WITH 3 GUYS AT 45 DEGREES, EVENLY SPACED AROUND TREE, THIRD GUY NOT SHOWN IN SECTION ABOVE.

1 CONIFEROUS TREE PLANTING - SECTION
SCALE: N.T.S.
L340-PLANTING DETAILS.DWG

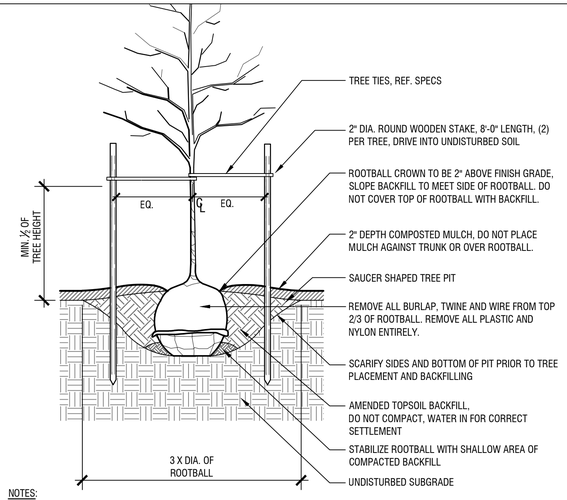

NOTES:

1. CHECK ROOTBALL FOR PRESENCE OF ROOT FLARE AT BASE OF TRUNK. REMOVE EXCESS SOIL OVER ROOT FLARE AND ADJUST DEPTH OF PLANTING HOLE TO ACCOMODATE REDUCED ROOTBALL DEPTH IF NEEDED. ROOT FLARE MUST BE VISIBLE ABOVE MULCH/SOIL/ROOTBALL.
2. MARK SOUTH SIDE OF TRUNK IN NURSERY. PLANT WITH SAME ORIENTATION IN THE FIELD.

2 DECIDUOUS TREE PLANTING - SECTION
SCALE: N.T.S.
L340-PLANTING DETAILS.DWG

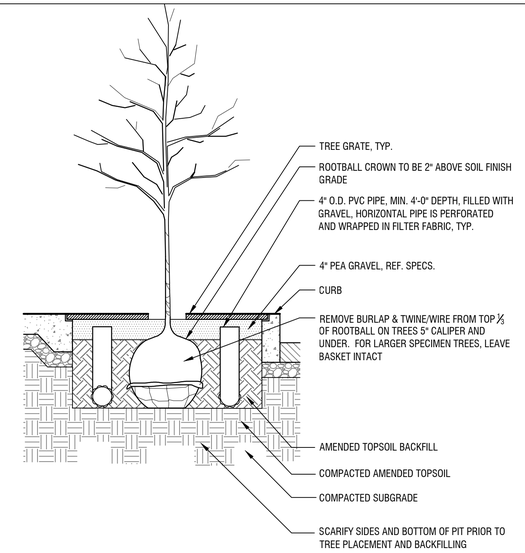

3 DECIDUOUS TREE PLANTING IN TREE PIT - SECTION
SCALE: N.T.S.
L340-PLANTING DETAILS.DWG

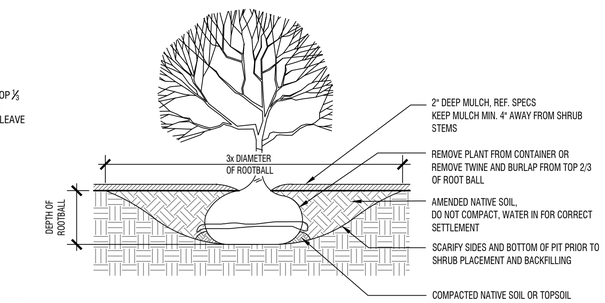

NOTE: ROOTBALL CROWN TO BE 1" HIGHER THAN FINISHED GRADE OF SOIL (NOT MULCH).

4 SHRUB PLANTING - SECTION
SCALE: N.T.S.
L340-PLANTING DETAILS.DWG

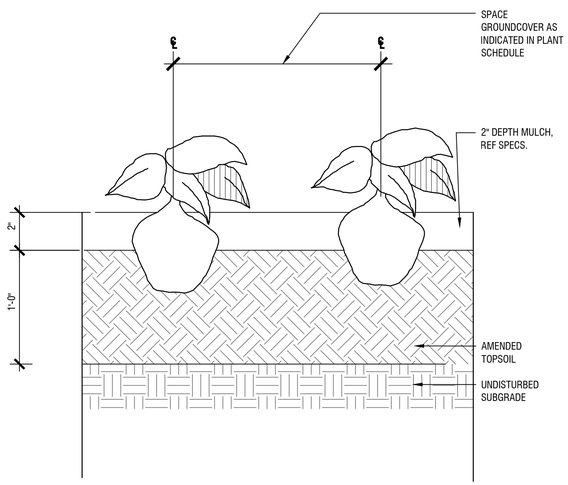

5 SECTION - GROUNDCOVER PLANTING
SCALE: N.T.S.
L340-PLANTING DETAILS.DWG

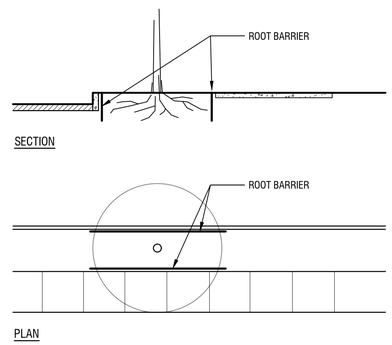

NOTES:

1. CITY APPROVED ROOT BARRIER METHOD TO BE USED FOR ALL STREET TREES LOCATED WITHIN 8 FEET OF ALL CURBS AND SIDEWALKS. ROOT BARRIER SHALL EXTEND 20 FT. ON BOTH SIDES OF TREE TRUNK. BARRIER SHALL BE 2" TO 4" FROM CURB OR SIDEWALK AND EXTEND A MIN OF 24" DEEP.
2. WHEN TREES ARE WITHIN TREE WELL (5 TOTAL), ROOT BARRIER SHALL BE PLACED ON ALL 4 SIDES.

6 ROOT BARRIER
SCALE: N.T.S.
L340-PLANTING DETAILS.DWG

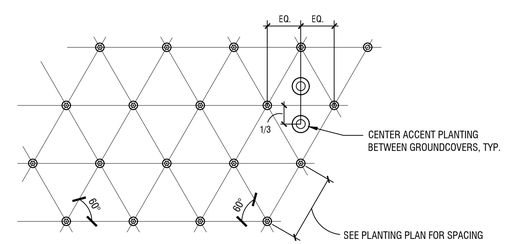

7 PLAN - TRIANGULAR GROUNDCOVER SPACING DETAIL
SCALE: N.T.S.
L340-PLANTING DETAILS.DWG

PRELIMINARY

Mayer/Reed
Mayer/Reed, Inc.
319 SW Washington St.
Suite 820
Portland, Oregon 97204
503.223.5953

S. 1ST AND STRAND STREETS ROAD AND UTILITY EXTENSIONS
ST. HELENS, OREGON
PLANTING PLANS

PLANTING DETAILS

TITLE

#	DATE	DESCRIPTION

REVISIONS

DATUM

MS — DRAWN BY
SVS — CHECKED BY

90% DESIGN
STATUS

JANUARY 10, 2021
DATE

19823
PROJECT NUMBER

L3.40

© 2021 OTAK, INC.

If this drawing is not 22" x 34", it has been reduced/enlarged. Scale accordingly.

Plotted: Jan 07, 2022 - 7:43pm mscherer M:\1-LA PROJECTS\HS-210142-DRAWINGS\1-CADD4_SHEETS\L340-Planting Details.dwg Layout Name: L3.40

ILLUMINATION LEGEND

ILLUMINATION

- (EX / WP) *Maintain and protect existing wood pole*
- (EX / LA) *Maintain and protect existing luminaire arm*
- (EX / LUM) *Maintain and protect existing LED luminaire*
- (LP / (N)) *Install proposed acorn style luminaire pole No. (N)*
- (SLP / (N)) *Install proposed luminaire pole on raised stone foundation No. (N)*
- (PLP / (N)) *Install proposed pedestrian scale post top luminaire pole No. (N)*
- (B / (N)) *Install proposed bollard No. (N)*

CABINETS

- (BMCL / A) *Install base mounted service cabinet, 120/240 volt metered. See wiring diagram on sheet IL10 for additional details.*
- (BMCL / B) *Install base mounted service cabinet, 120/240 volt metered. See wiring diagram on sheet IL11 for additional details.*

JUNCTION BOXES

- (JB / 1) *Install 17"X10"X12" (Min. dimension) precast concrete junction box*
- (JB / 2) *Install 22"X12"X12" (Min. dimension) precast concrete junction box*
- (JB / 1A) *Install 17"X10"X12" (Min. dimension) precast concrete junction box with concrete apron*
- (GFI / (N)) *Install GFI receptacle No. (N). See Junction box and GFI receptacle detail on Sheet IL12*

CONDUITS

- (S) *Install (S) inch non-metallic conduit*
- (CS) *Install 2 inch conduit stub for future use, cap ends*
- (W) *Install conduit and wire as required by power company*
- (HDD) *Install conduit by horizontal directional drilling, open trench not allowed*

WIRES

- (PL) *Install polyethylene pull line*
- (N | G) *Install (N=Number) No. (G=AWG wire size) XHHW wires*
- *L#N(X)* *Roadway illumination circuit No. (N) from service cabinet (X)*
- *G(S)* *Install one No. (S) copper ground wire*

LIGHTING NOTES

1. *Decorative acorn style light poles shall be:*

MANUFACTURER:	CATALOG NUMBER
VISCO	*V1-S13-F/14'*
VISCO	*V1-S13-F/18'*

2. *Acorn style luminaire shall be:*

MANUFACTURER:	CATALOG NUMBER
VISCO	*1200M-98-40-T3-NL-PEC-9005*
VISCO	*1200M-49-40-T3-NL-PEC-9005*

3. *Post Top pedestrian scale poles shall be:*

MANUFACTURER:	CATALOG NUMBER
LUMINIS	*12' XXXX (City Coordination Needed)*

4. *Post Top luminaire shall be:*

MANUFACTURER:	CATALOG NUMBER
LUMINIS	*MA20-L1L40-TYP3*

5. *Bollard shall be:*

MANUFACTURER:	CATALOG NUMBER
STUCTURA	*LBL-S-36-L30SO-2-C(X)-P(X)-UNV-STD*

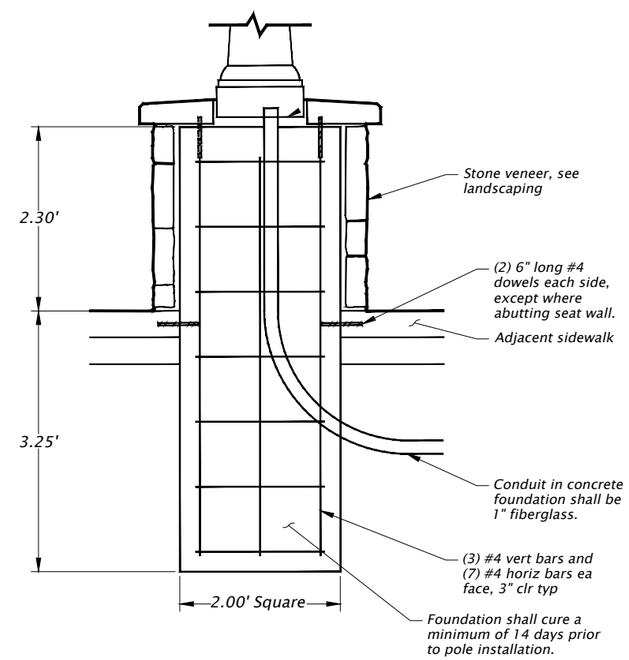

RAISED STOLE POLE FOUNDATION DETAIL

POLE FOUNDATION NOTES

1. *Standard foundation design is based on the following soil parameter, which are characteristic of the predominantly silty soils located throughout the greater portland area: soil internal friction angle: 26 degrees soil effective weight = 110 pcf.*
2. *Project bids for foundations shall be based on standard design depth as shown on this drawing. Additional foundation depth, if required for conditions as outlined below in notes 3-6, will be paid for by a contract change order.*
3. *Shafts that encounter up to 3 feet of fill soil require the total foundation depth be increased by an amount equal to the thickness of the fill.*
4. *Shafts that encounter more than 3 feet of fill soil require a site observation and special foundation design provided by the City. Contractor to contact the City's Project Engineer to coordinate.*
5. *Shafts that encounter groundwater level in lower half of shaft require a 2 foot increase in total foundation depth.*
6. *Shafts that encounter groundwater level in upper half of shaft require a total foundation depth of 1.5 times the standard depth.*

City of St. Helens FOUNDED 1850

REGISTERED PROFESSIONAL ENGINEER 74,348 OREGON JUNE 12, 2015 STEVEN J. BOICE EXPIRES: DEC. 31, 2023

90% DESIGN

DKS

720 SW Washington St, Suite 500
Portland, Oregon 97205
www.dksassociates.com

S. 1ST AND STRAND STREETS ROAD AND UTILITY EXTENSIONS
ST. HELENS, OREGON

ILLUMINATION LEGEND

TITLE

#	DATE	DESCRIPTION

REVISIONS

DATUM

RAS — DRAWN BY
SJB — CHECKED BY

90% DESIGN — STATUS

JANUARY 10, 2022 — DATE

19823 — PROJECT NUMBER

IL1

© 2021 OTAK, INC.

If this drawing is not 22" x 34", it has been reduced/enlarged. Scale accordingly.

Plotted: Jan 10, 2022 - 9:03am jacob.shelton X:\Projects\2021\P21058.000 St Helens 1st and Strand\CAD\IL1.dwg Layout Name: IL1

ILLUMINATION PLAN

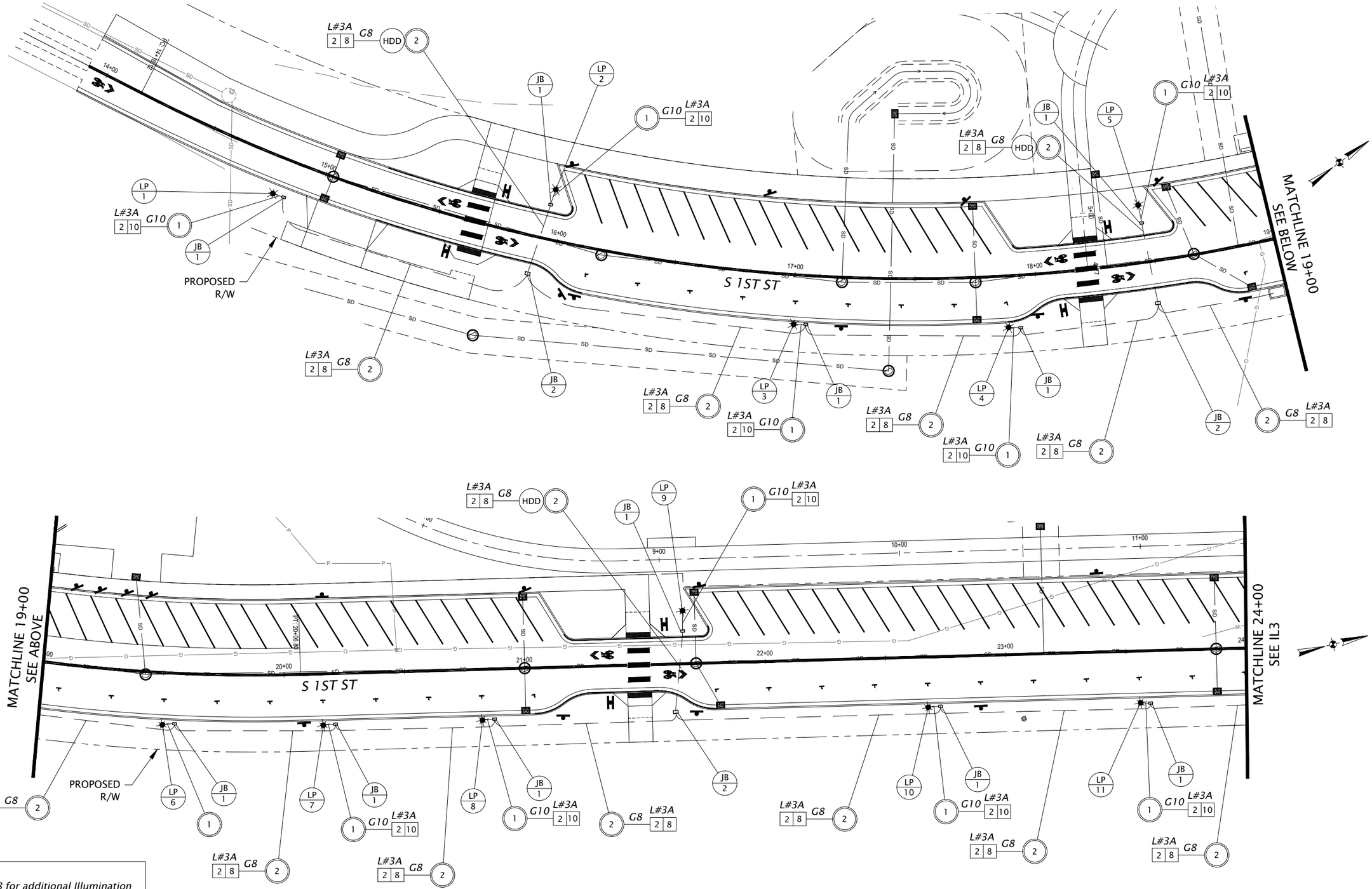

NOTE:
See IL7-IL8 for additional Illumination installations for multiuse path

City of St. Helens
FOUNDED 1850

REGISTERED PROFESSIONAL ENGINEER
74,348
OREGON
JUNE 12, 2015
STEVEN J. BOICE
EXPIRES: DEC. 31, 2023

90% DESIGN

DKS

720 SW Washington St, Suite 500
Portland, Oregon 97205
www.dksassociates.com

S. 1ST AND STRAND STREETS
ROAD AND UTILITY EXTENSIONS
ST. HELENS, OREGON

ILLUMINATION PLAN

TITLE

#	DATE	DESCRIPTION

REVISIONS

DATUM

RAS — DRAWN BY
SJB — CHECKED BY

90% DESIGN
STATUS

JANUARY 10, 2022
DATE

19823
PROJECT NUMBER

IL2

© 2021 OTAK, INC.

If this drawing is not 22" x 34", it has been reduced/enlarged. Scale accordingly.

Plotted: Jan 10, 2022 - 8:05am jacob.shelton X:\Projects\2021\P21058-000\St Helens 1st and Strand\CAD\IL2.dwg Layout:Name_IL2

ILLUMINATION PLAN

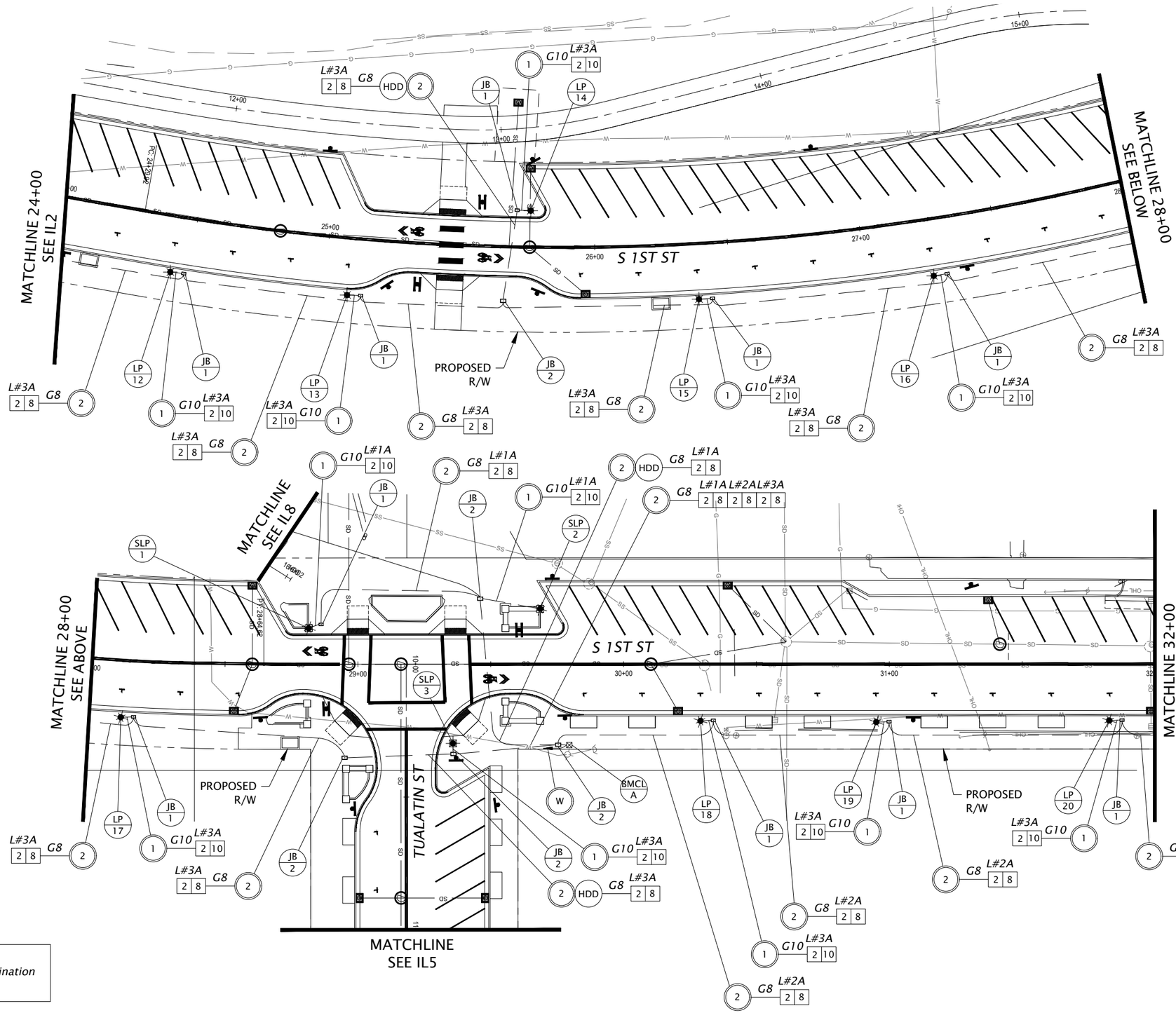

NOTE:
See IL7-IL8 for additional Illumination installations for multiuse path

0 20 40
SCALE IN FEET

City of St. Helens
FOUNDED 1850

REGISTERED PROFESSIONAL ENGINEER
74,348
OREGON
JUNE 12, 2015
STEVEN J. BOICE
EXPIRES: DEC. 31, 2023

90% DESIGN

DKS
720 SW Washington St, Suite 500
Portland, Oregon 97205
www.dksassociates.com

S. 1ST AND STRAND STREETS
ROAD AND UTILITY EXTENSIONS
ST. HELENS, OREGON

ILLUMINATION PLAN

TITLE

#	DATE	DESCRIPTION

REVISIONS

DATUM

RAS — DRAWN BY
SJB — CHECKED BY

90% DESIGN
STATUS

JANUARY 10, 2022
DATE

19823
PROJECT NUMBER

IL3

© 2021 OTAK, INC.

If this drawing is not 22" x 34", it has been reduced/enlarged. Scale accordingly.

Plotted: Jan 10, 2022 - 9:07am jacob.shelton X:\Projects\2021\P21058-000\St Helens 1st and Strand\CAD\IL3.dwg Layout Name: IL3

ILLUMINATION PLAN

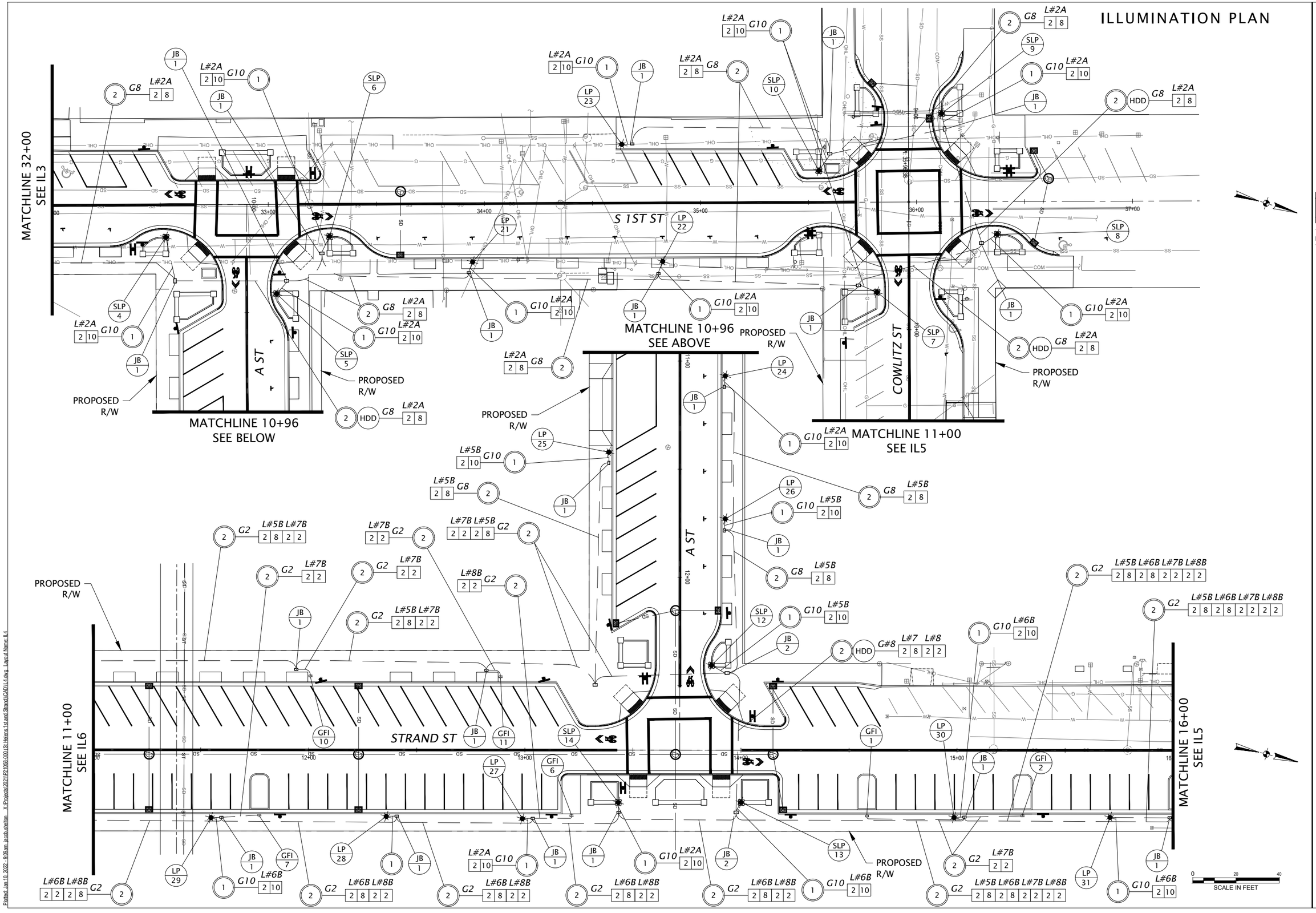

City of St. Helens

REGISTERED PROFESSIONAL ENGINEER 74,348 OREGON JUNE 12, 2015 STEVEN J. BOICE

90% DESIGN

EXPIRES: DEC. 31, 2023

DKS

720 SW Washington St, Suite 500
Portland, Oregon 97205
www.dksassociates.com

S. 1ST AND STRAND STREETS ROAD AND UTILITY EXTENSIONS

ST. HELENS, OREGON

ILLUMINATION PLAN

TITLE

#	DATE	DESCRIPTION

REVISIONS

DATUM

RAS — DRAWN BY
SJB — CHECKED BY

90% DESIGN
STATUS

JANUARY 10, 2022
DATE

19823
PROJECT NUMBER

IL4

© 2021 OTAK, INC.

If this drawing is not 22" x 34", it has been reduced/enlarged. Scale accordingly.

Plotted: Jan 10, 2022 - 9:09am jacob.shelton X:\Projects\2021\P21058-000\St Helens 1st and Strand\CAD\IL4.dwg Layout Name: IL4

ILLUMINATION PLAN

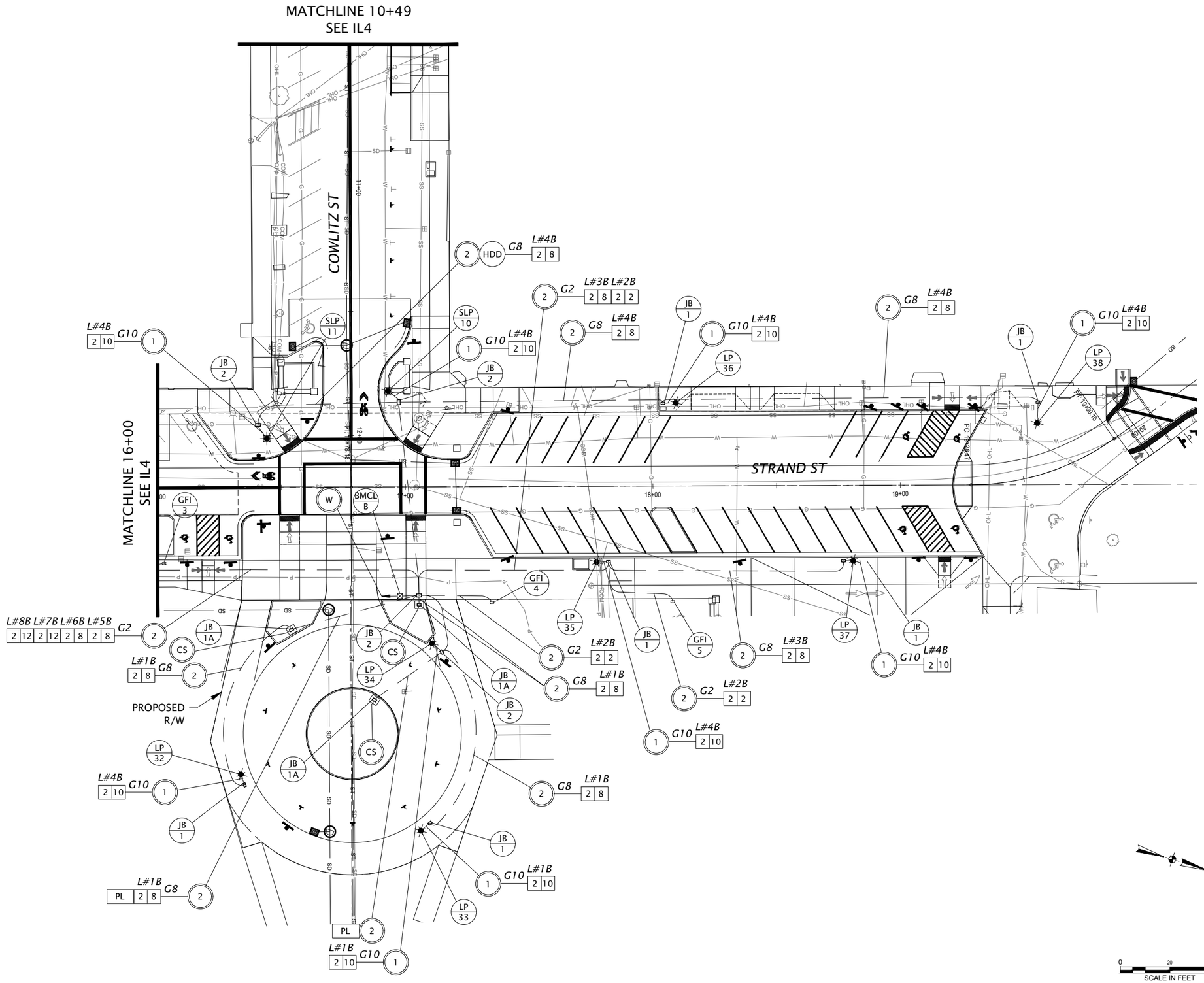

Plotted: Jan 10, 2022 - 9:11am jacob.shelton X:\Projects\2021\P21058-000\St Helens 1st and Strand\CAD\IL5.dwg Layout Name: IL5

City of St. Helens
FOUNDED 1850

REGISTERED PROFESSIONAL ENGINEER
74,348
OREGON
JUNE 12, 2015
STEVEN J. BOICE
EXPIRES: DEC. 31, 2023

90% DESIGN

DKS

720 SW Washington St, Suite 500
Portland, Oregon 97205
www.dksassociates.com

S. 1ST AND STRAND STREETS ROAD AND UTILITY EXTENSIONS

ST. HELENS, OREGON

ILLUMINATION PLAN

TITLE

#	DATE	DESCRIPTION

REVISIONS

DATUM

RAS — DRAWN BY
SJB — CHECKED BY

90% DESIGN
STATUS

JANUARY 10, 2022
DATE

19823
PROJECT NUMBER

IL5

© 2021 OTAK, INC.

If this drawing is not 22" x 34", it has been reduced/enlarged. Scale accordingly.

ILLUMINATION PLAN

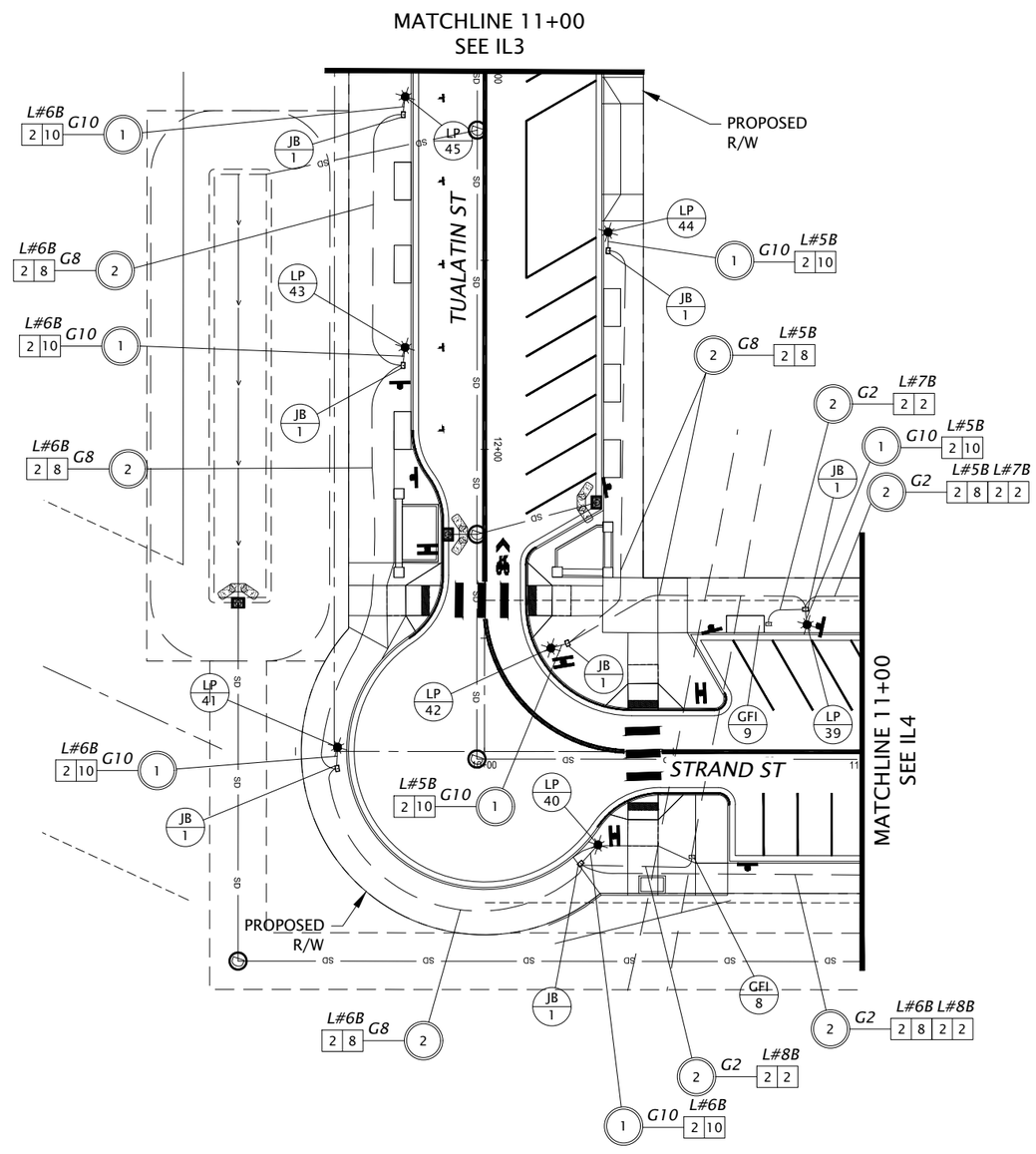

0 20 40
SCALE IN FEET

City of St. Helens
FOUNDED 1850

REGISTERED PROFESSIONAL ENGINEER
74,348
OREGON
JUNE 12, 2015
STEVEN J. BOICE
EXPIRES: DEC. 31, 2023

90% DESIGN

DKS

720 SW Washington St, Suite 500
Portland, Oregon 97205
www.dksassociates.com

S. 1ST AND STRAND STREETS ROAD AND UTILITY EXTENSIONS

ST. HELENS, OREGON

ILLUMINATION PLAN

TITLE

#	DATE	DESCRIPTION

REVISIONS

DATUM

RAS — DRAWN BY
SJB — CHECKED BY

90% DESIGN
STATUS

JANUARY 10, 2022
DATE

19823
PROJECT NUMBER

IL6

© 2021 OTAK, INC.

If this drawing is not 22" x 34", it has been reduced/enlarged. Scale accordingly.

Plotted: Jan 10, 2022 - 9:13am jacob.shelton X:\Projects\2021\P21058-000\St Helens 1st and Strand\CAD\IL6.dwg Layout Name: IL6

ILLUMINATION PLAN

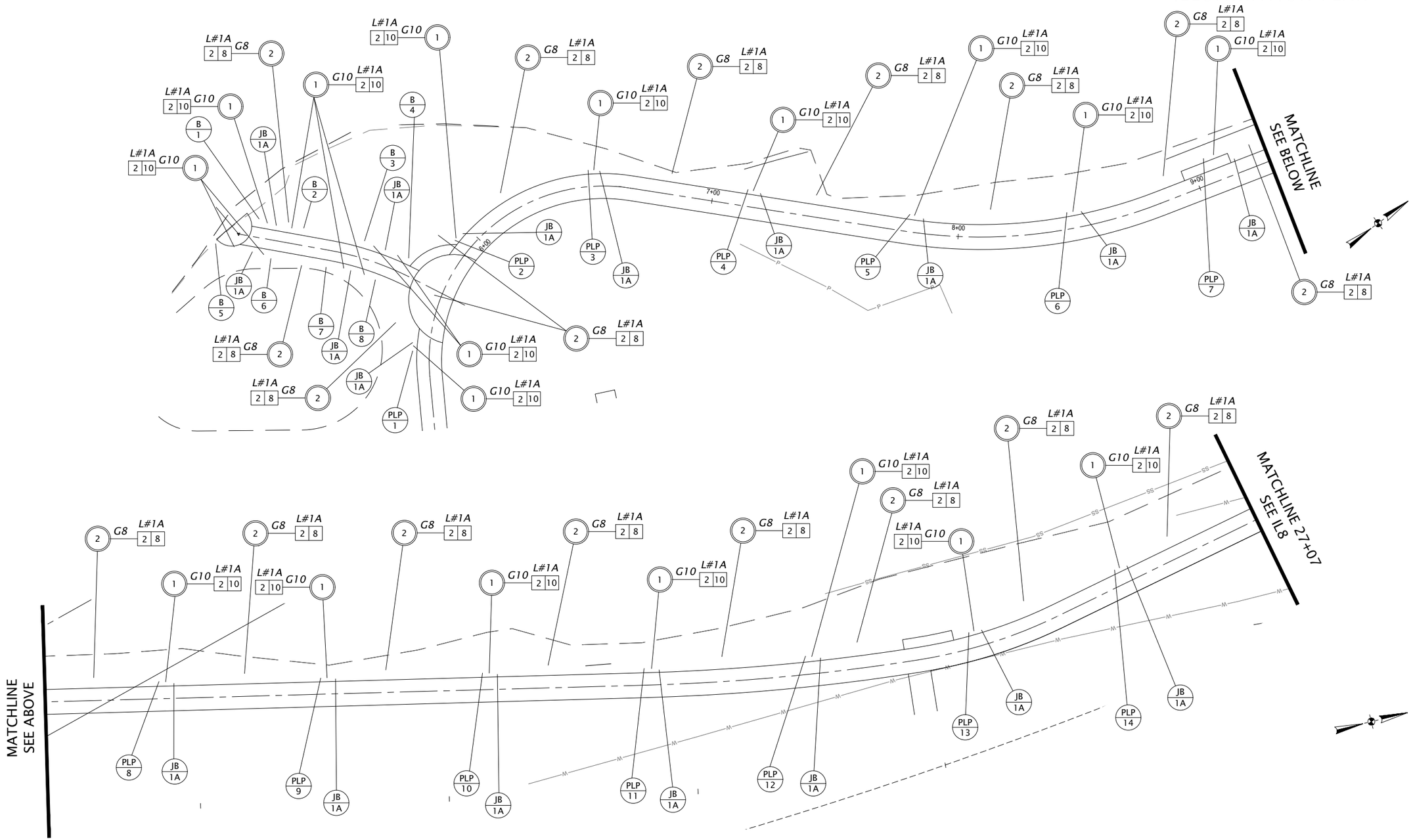

0 20 40
SCALE IN FEET

City of St. Helens
FOUNDED 1850

REGISTERED PROFESSIONAL ENGINEER
74,348
OREGON
JUNE 12, 2015
STEVEN J. BOICE
EXPIRES: DEC. 31, 2023

90% DESIGN

DKS

720 SW Washington St, Suite 500
Portland, Oregon 97205
www.dksassociates.com

S. 1ST AND STRAND STREETS ROAD AND UTILITY EXTENSIONS

ST. HELENS, OREGON

ILLUMINATION PLAN

TITLE

#	DATE	DESCRIPTION

REVISIONS

DATUM

RAS — DRAWN BY
SJB — CHECKED BY

90% DESIGN
STATUS

JANUARY 10, 2022
DATE

19823
PROJECT NUMBER

IL7

© 2021 OTAK, INC.

If this drawing is not 22" x 34", it has been reduced/enlarged. Scale accordingly.

Plotted: Jan 10, 2022 - 9:14am jacob.shelton X:\Projects\2021\P21058.000 St. Helens 1st and Strand\CAD\IL7.dwg Layout Name: IL2

ILLUMINATION PLAN

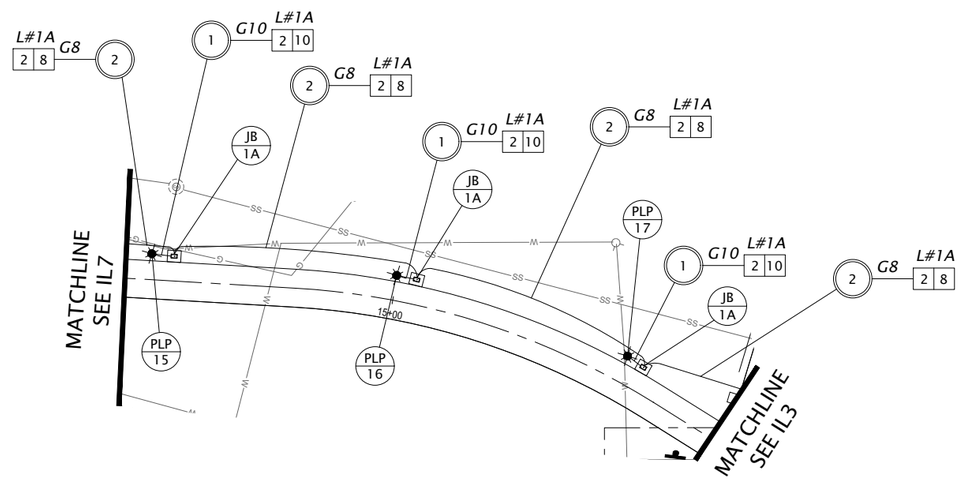

NOTE:
See IL3 for additional Illumination installations for roadway

0 20 40
SCALE IN FEET

City of St. Helens
FOUNDED 1850

REGISTERED PROFESSIONAL ENGINEER
74,348
OREGON
JUNE 12, 2015
STEVEN J. BOICE
90% DESIGN
EXPIRES: DEC. 31, 2023

DKS
720 SW Washington St, Suite 500
Portland, Oregon 97205
www.dksassociates.com

S. 1ST AND STRAND STREETS
ROAD AND UTILITY EXTENSIONS
ST. HELENS, OREGON

ILLUMINATION PLAN

TITLE

#	DATE	DESCRIPTION

REVISIONS

DATUM

RAS — DRAWN BY
SJB — CHECKED BY

90% DESIGN
STATUS

JANUARY 10, 2022
DATE

19823
PROJECT NUMBER

IL8

© 2021 OTAK, INC.

If this drawing is not 22" x 34", it has been reduced/enlarged. Scale accordingly.

Plotted: Jan 10, 2022 - 9:16am jacob.shelton X:\Projects\2021\P21058-000\St Helens 1st and Strand\CAD\IL8.dwg Layout Name: IL8

ILLUMINATION DETAILS

ILLUMINATION POLE SCHEDULE

POLE NO.	STREET	POLE HEIGHT (ft)	POLE PART NUMBER	LUMINAIRE				
				PART NUMBER	MANUFACTURER	LIGHT SOURCE	WATTAGE	TYPE
Intersection Lighting (Luminaire Poles on Raised Stone Foundation)								
1	S 1st St @ Tualatin St	14'	V1-S13-F/14'	1200M-49-40-T3-NL-PEC-9005	VISCO	LED	49	III
2	S 1st St @ Tualatin St	14'	V1-S13-F/14'	1200M-49-40-T3-NL-PEC-9005	VISCO	LED	49	III
3	S 1st St @ Tualatin St	14'	V1-S13-F/14'	1200M-98-40-T3-NL-PEC-9005	VISCO	LED	98	III
4	S 1st St @ "A St"	14'	V1-S13-F/14'	1200M-98-40-T3-NL-PEC-9005	VISCO	LED	98	III
5	S 1st St @ "A St"	14'	V1-S13-F/14'	1200M-98-40-T3-NL-PEC-9005	VISCO	LED	98	III
6	S 1st St @ "A St"	14'	V1-S13-F/14'	1200M-98-40-T3-NL-PEC-9005	VISCO	LED	98	III
7	S 1st St @ Cowlitz St	14'	V1-S13-F/14'	1200M-98-40-T3-NL-PEC-9005	VISCO	LED	98	III
8	S 1st St @ Cowlitz St	14'	V1-S13-F/14'	1200M-98-40-T3-NL-PEC-9005	VISCO	LED	98	III
9	S 1st St @ Cowlitz St	14'	V1-S13-F/14'	1200M-98-40-T3-NL-PEC-9005	VISCO	LED	98	III
10	S 1st St @ Cowlitz St	14'	V1-S13-F/14'	1200M-98-40-T3-NL-PEC-9005	VISCO	LED	98	III
11	Strand St @ Cowlitz St	14'	V1-S13-F/14'	1200M-98-40-T3-NL-PEC-9005	VISCO	LED	98	III
12	Strand St @ Cowlitz St	14'	V1-S13-F/14'	1200M-98-40-T3-NL-PEC-9005	VISCO	LED	98	III
13	Strand St @ 'A St"	14'	V1-S13-F/14'	1200M-98-40-T3-NL-PEC-9005	VISCO	LED	98	III
14	Strand St @ 'A St"	14'	V1-S13-F/14'	1200M-98-40-T3-NL-PEC-9005	VISCO	LED	98	III
15	Strand St @ 'A St"	14'	V1-S13-F/14'	1200M-98-40-T3-NL-PEC-9005	VISCO	LED	98	III
Roadway Lighting								
1	S 1 st St	16'	V1-S13-F/16'	1200M-98-40-T3-NL-PEC-9005	VISCO	LED	98	III
2	S 1 st St	16'	V1-S13-F/16'	1200M-98-40-T3-NL-PEC-9005	VISCO	LED	98	III
5	S 1 st St	16'	V1-S13-F/16'	1200M-98-40-T3-NL-PEC-9005	VISCO	LED	98	III
6	S 1 st St	16'	V1-S13-F/16'	1200M-98-40-T3-NL-PEC-9005	VISCO	LED	98	III
7	S 1 st St	16'	V1-S13-F/16'	1200M-98-40-T3-NL-PEC-9005	VISCO	LED	98	III
8	S 1 st St	16'	V1-S13-F/16'	1200M-98-40-T3-NL-PEC-9005	VISCO	LED	98	III
9	S 1 st St	16'	V1-S13-F/16'	1200M-98-40-T3-NL-PEC-9005	VISCO	LED	98	III
10	S 1 st St	16'	V1-S13-F/16'	1200M-98-40-T3-NL-PEC-9005	VISCO	LED	98	III
11	S 1 st St	16'	V1-S13-F/16'	1200M-98-40-T3-NL-PEC-9005	VISCO	LED	98	III
12	S 1 st St	16'	V1-S13-F/16'	1200M-98-40-T3-NL-PEC-9005	VISCO	LED	98	III
13	S 1 st St	16'	V1-S13-F/16'	1200M-98-40-T3-NL-PEC-9005	VISCO	LED	98	III
14	S 1 st St	16'	V1-S13-F/16'	1200M-98-40-T3-NL-PEC-9005	VISCO	LED	98	III
15	S 1 st St	16'	V1-S13-F/16'	1200M-98-40-T3-NL-PEC-9005	VISCO	LED	98	III
16	S 1 st St	16'	V1-S13-F/16'	1200M-98-40-T3-NL-PEC-9005	VISCO	LED	98	III
17	S 1 st St	16'	V1-S13-F/16'	1200M-98-40-T3-NL-PEC-9005	VISCO	LED	98	III
18	S 1 st St	16'	V1-S13-F/16'	1200M-98-40-T3-NL-PEC-9005	VISCO	LED	98	III
19	S 1 st St	16'	V1-S13-F/16'	1200M-98-40-T3-NL-PEC-9005	VISCO	LED	98	III
20	S 1 st St	16'	V1-S13-F/16'	1200M-98-40-T3-NL-PEC-9005	VISCO	LED	98	III
21	S 1 st St	16'	V1-S13-F/16'	1200M-98-40-T3-NL-PEC-9005	VISCO	LED	98	III
22	S 1 st St	16'	V1-S13-F/16'	1200M-98-40-T3-NL-PEC-9005	VISCO	LED	98	III
23	S 1 st St	16'	V1-S13-F/16'	1200M-98-40-T3-NL-PEC-9005	VISCO	LED	98	III
24	"A St"	16'	V1-S13-F/16'	1200M-49-40-T3-NL-PEC-9005	VISCO	LED	49	III
25	"A St"	16'	V1-S13-F/16'	1200M-98-40-T3-NL-PEC-9005	VISCO	LED	98	III
26	"A St"	16'	V1-S13-F/16'	1200M-49-40-T3-NL-PEC-9005	VISCO	LED	49	III
27	Strand St	16'	V1-S13-F/16'	1200M-98-40-T3-NL-PEC-9005	VISCO	LED	98	III
28	Strand St	16'	V1-S13-F/16'	1200M-98-40-T3-NL-PEC-9005	VISCO	LED	98	III
29	Strand St	16'	V1-S13-F/16'	1200M-98-40-T3-NL-PEC-9005	VISCO	LED	98	III
30	Strand St	16'	V1-S13-F/16'	1200M-98-40-T3-NL-PEC-9005	VISCO	LED	98	III
31	Strand St	16'	V1-S13-F/16'	1200M-98-40-T3-NL-PEC-9005	VISCO	LED	98	III
32	Cowlitz	16'	V1-S13-F/16'	1200M-98-40-T3-NL-PEC-9005	VISCO	LED	98	III
33	Cowlitz	16'	V1-S13-F/16'	1200M-49-40-T3-NL-PEC-9005	VISCO	LED	49	III
34	Cowlitz	16'	V1-S13-F/16'	1200M-49-40-T3-NL-PEC-9005	VISCO	LED	49	III
35	Strand St	16'	V1-S13-F/16'	1200M-98-40-T3-NL-PEC-9005	VISCO	LED	98	III
36	Strand St	16'	V1-S13-F/16'	1200M-98-40-T3-NL-PEC-9005	VISCO	LED	98	III
37	Strand St	16'	V1-S13-F/16'	1200M-98-40-T3-NL-PEC-9005	VISCO	LED	98	III
38	Strand St	16'	V1-S13-F/16'	1200M-98-40-T3-NL-PEC-9005	VISCO	LED	98	III
39	Strand St	16'	V1-S13-F/16'	1200M-49-40-T3-NL-PEC-9005	VISCO	LED	49	III
40	Strand St	16'	V1-S13-F/16'	1200M-98-40-T3-NL-PEC-9005	VISCO	LED	98	III
41	Strand St	16'	V1-S13-F/16'	1200M-49-40-T3-NL-PEC-9005	VISCO	LED	49	III
42	Strand St	16'	V1-S13-F/16'	1200M-49-40-T3-NL-PEC-9005	VISCO	LED	49	III
43	Tualatin St	16'	V1-S13-F/16'	1200M-98-40-T3-NL-PEC-9005	VISCO	LED	98	III
44	Tualatin St	16'	V1-S13-F/16'	1200M-98-40-T3-NL-PEC-9005	VISCO	LED	98	III
45	Tualatin St	16'	V1-S13-F/16'	1200M-49-40-T3-NL-PEC-9005	VISCO	LED	49	III

ILLUMINATION POLE SCHEDULE

POLE NO.	STREET	POLE HEIGHT (ft)	POLE PART NUMBER	LUMINAIRE				
				PART NUMBER	MANUFACTURER	LIGHT SOURCE	WATTAGE	TYPE
Multi-use Path Lighting (Post Top)								
1	-	12'	12' (XXXXX) Coordinate with City	MA20-L1L40-TYP3	LUMINIS	LED	36	III
2	-	12'	12' (XXXXX) Coordinate with City	MA20-L1L40-TYP4	LUMINIS	LED	36	III
5	-	12'	12' (XXXXX) Coordinate with City	MA20-L1L40-TYP5	LUMINIS	LED	36	III
6	-	12'	12' (XXXXX) Coordinate with City	MA20-L1L40-TYP6	LUMINIS	LED	36	III
7	-	12'	12' (XXXXX) Coordinate with City	MA20-L1L40-TYP7	LUMINIS	LED	36	III
8	-	12'	12' (XXXXX) Coordinate with City	MA20-L1L40-TYP8	LUMINIS	LED	36	III
9	-	12'	12' (XXXXX) Coordinate with City	MA20-L1L40-TYP9	LUMINIS	LED	36	III
10	-	12'	12' (XXXXX) Coordinate with City	MA20-L1L40-TYP10	LUMINIS	LED	36	III
11	-	12'	12' (XXXXX) Coordinate with City	MA20-L1L40-TYP11	LUMINIS	LED	36	III
12	-	12'	12' (XXXXX) Coordinate with City	MA20-L1L40-TYP12	LUMINIS	LED	36	III
13	-	12'	12' (XXXXX) Coordinate with City	MA20-L1L40-TYP13	LUMINIS	LED	36	III
14	-	12'	12' (XXXXX) Coordinate with City	MA20-L1L40-TYP14	LUMINIS	LED	36	III
15	-	12'	12' (XXXXX) Coordinate with City	MA20-L1L40-TYP15	LUMINIS	LED	36	III
16	-	12'	12' (XXXXX) Coordinate with City	MA20-L1L40-TYP16	LUMINIS	LED	36	III
17	-	12'	12' (XXXXX) Coordinate with City	MA20-L1L40-TYP17	LUMINIS	LED	36	III
Multi-use Path Lighting (Bollard)								
1	-	3'	LBL-S-36-L30SO-2-C(X)-P(X)-UNV-STD	N/A	STRUCTURA	LED	11	II
2	-	3'	LBL-S-36-L30SO-2-C(X)-P(X)-UNV-STD	N/A	STRUCTURA	LED	11	II
3	-	3'	LBL-S-36-L30SO-2-C(X)-P(X)-UNV-STD	N/A	STRUCTURA	LED	11	II
4	-	3'	LBL-S-36-L30SO-2-C(X)-P(X)-UNV-STD	N/A	STRUCTURA	LED	11	II
5	-	3'	LBL-S-36-L30SO-2-C(X)-P(X)-UNV-STD	N/A	STRUCTURA	LED	11	II
6	-	3'	LBL-S-36-L30SO-2-C(X)-P(X)-UNV-STD	N/A	STRUCTURA	LED	11	II
7	-	3'	LBL-S-36-L30SO-2-C(X)-P(X)-UNV-STD	N/A	STRUCTURA	LED	11	II
8	-	3'	LBL-S-36-L30SO-2-C(X)-P(X)-UNV-STD	N/A	STRUCTURA	LED	11	II

LIGHTING VALUES TABLE

LOCATION	CLASSIFICATION	TARGETED AVERAGE ILLUMINANCE (fc)	ACHIEVED AVERAGE ILLUMINANCE (fc)	TARGETED UNIFORMITY (Avg/Min)	ACHIEVED UNIFORMITY (Avg/Min)
INTERSECTIONS					
S 1st St and Cowlitz St	Collector /Local	≥2.0	2.4	≤4:1	1.8
S 1st St and "A" St	Collector /Local	≥2.0	2.2	≤4:1	2.0
S 1st St and Tualatin St	Collector /Local	≥2.0	2.0	≤4:1	3.3
Strand St and Cowlitz St	Local/Local	≥1.7	2.0	≤6:1	3.3
Strand St and "A" St	Local/Local	≥1.7	2.0	≤6:1	3.0
ROADWAY SEGMENTS - S 1st St					
Cowlitz to "A" St	Collector	≥1.2	1.8	≤4:1	3.7
"A" St to Tualatin St	Collector	≥1.2	1.6	≤4:1	3.9
Tualatin St to End	Collector	≥1.2	1.5	≤4:1	3.8
ROADWAY SEGMENTS - Cowlitz St					
Cul-de-sac (NEW)	Local	≥0.9	0.9	≤6:1	4.4
ROADWAY SEGMENTS - Strand St					
Plaza Square to Cowlitz St	Local	≥0.9	0.9	≤6:1	3
Cowlitz St to "A" Street	Local	≥0.9	1.0	≤6:1	4.9
"A" St to S 1st St	Local	≥0.9	1.2	≤6:1	3.9
ROADWAY SEGMENTS - A Street					
Strand St to S 1st St	Local	≥0.9	1.5	≤6:1	2.2
PEDESTRIAN AREAS					
Bluff Multiuse Path	High	≥0.9	2.6	≤4:1	4.4

NOTE: VERTICLE ILLUMINANCE AT ALL UNCONTROLLED CROSSWALKS AND MIDBLOCK CROSSWALKS MEETS OR EXCEEDS THE AVERAGE ILLUMINANCE FOR EACH DRIVING DIRECTION AT A STOPPING SIGHT DISTANCE PER EIS DG 19-08 AND RP-8-18

City of St. Helens FOUNDED 1850

REGISTERED PROFESSIONAL ENGINEER 74,348 OREGON JUNE 12, 2015 STEVEN J. BOICE

90% DESIGN

EXPIRES: DEC. 31, 2023

DKS

720 SW Washington St, Suite 500
Portland, Oregon 97205
www.dksassociates.com

S. 1ST AND STRAND STREETS ROAD AND UTILITY EXTENSIONS

ST. HELENS, OREGON

ILLUMINATION DETAILS

TITLE

#	DATE	DESCRIPTION

REVISIONS

DATUM

RAS — DRAWN BY

SJB — CHECKED BY

90% DESIGN — STATUS

JANUARY 10, 2022 — DATE

19823 — PROJECT NUMBER

IL9

© 2021 OTAK, INC.

If this drawing is not 22" x 34", it has been reduced/enlarged. Scale accordingly.

Plotted: Jan 10, 2022 - 9:16am jacob.shelton X:\Projects\2021\P21058.000\St Helens 1st and Strand\CAD\IL8.dwg Layout Name: IL9

ILLUMINATION DETAILS

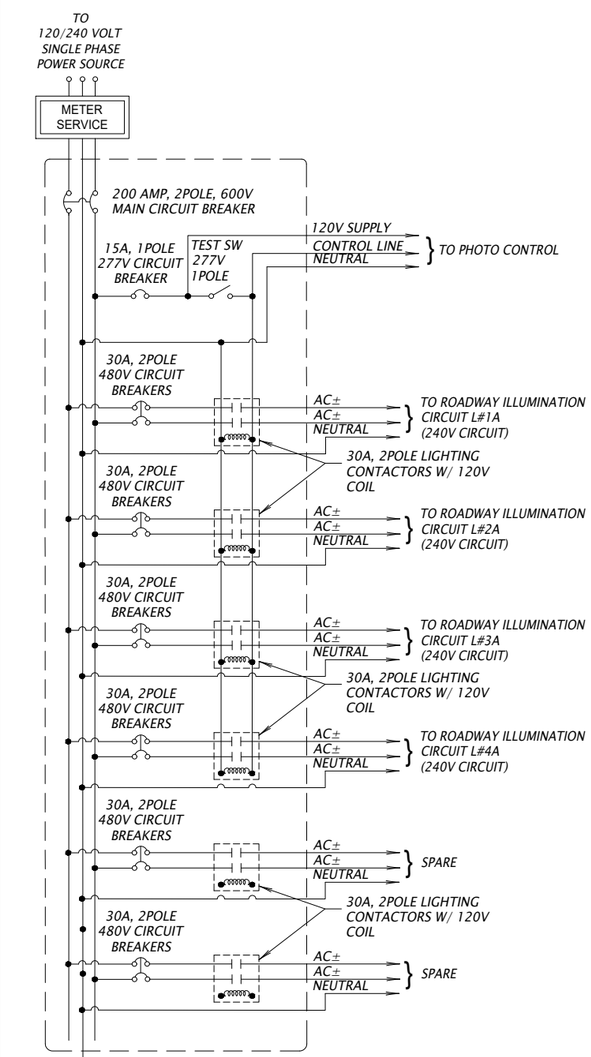

BMCL
A

WIRING DIAGRAM

BASE MOUNTED CONTROL CABINET

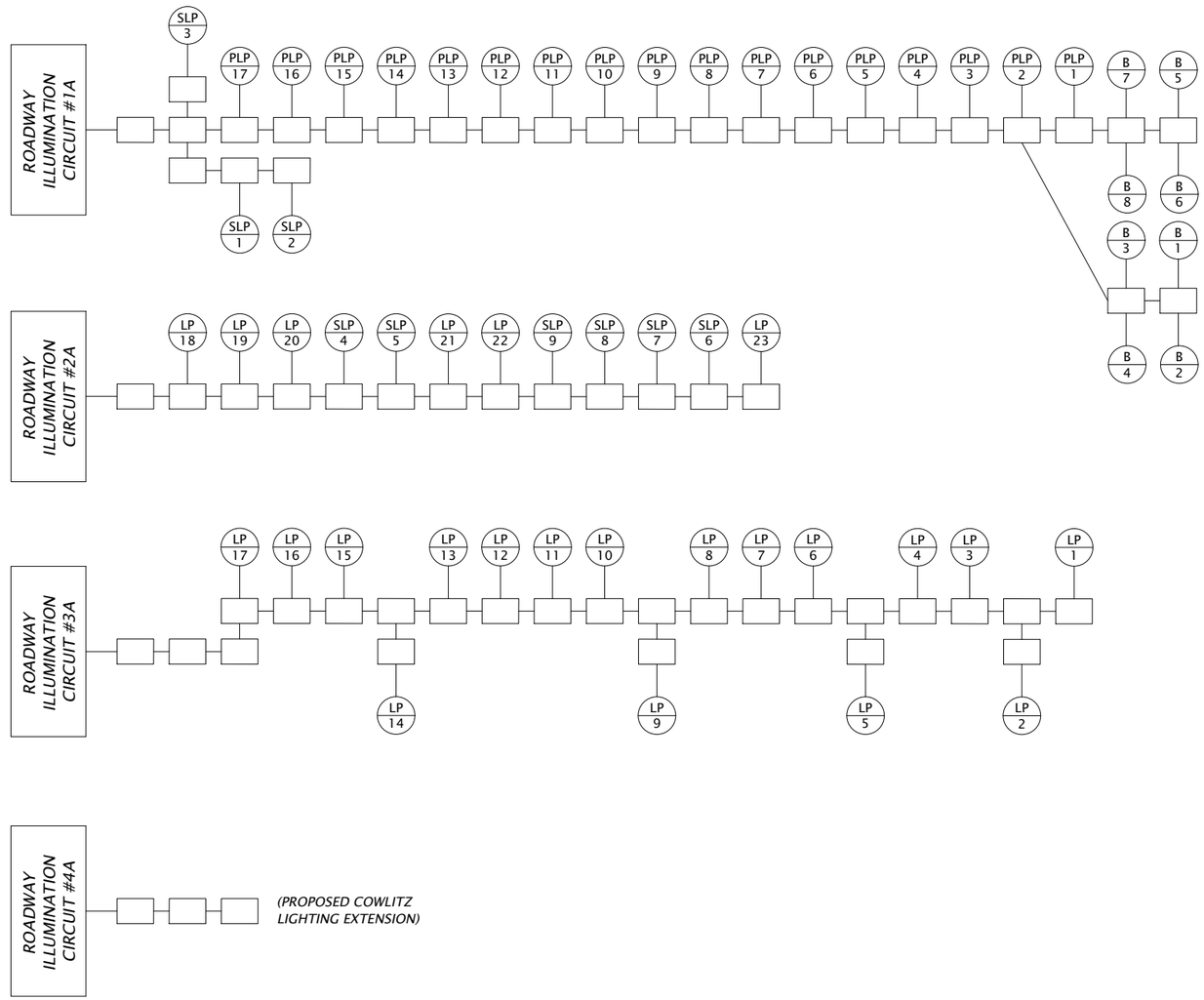

LEGEND

- *Junction box*
- LP (N) — *Proposed luminaire pole No. (N)*
- SLP (N) — *Proposed luminaire pole on proposed raise stone foundation No. (N)*
- PLP (N) — *Proposed pedestrian scale post top luminaire pole No. (N)*
- B (N) — *Proposed bollard No. (N)*

City of St. Helens
FOUNDED 1850

REGISTERED PROFESSIONAL ENGINEER
74,348
OREGON
JUNE 12, 2015
STEVEN J. BOICE
EXPIRES: DEC. 31, 2023

90% DESIGN

DKS

720 SW Washington St, Suite 500
Portland, Oregon 97205
www.dksassociates.com

S. 1ST AND STRAND STREETS
ROAD AND UTILITY EXTENSIONS
ST. HELENS, OREGON

ILLUMINATION DETAILS

TITLE

#	DATE	DESCRIPTION

REVISIONS

DATUM

RAS — DRAWN BY
SJB — CHECKED BY

90% DESIGN
STATUS

JANUARY 10, 2022
DATE

19823
PROJECT NUMBER

IL10

© 2021 OTAK, INC.

If this drawing is not 22" x 34", it has been reduced/enlarged. Scale accordingly.

Plotted: Jan 10, 2022 - 3:17am jacob.shelton X:\Projects\2021\P21058-000\St Helens 1st and Strand\CAD\IL10.dwg Layout Name: IL10

ILLUMINATION DETAILS

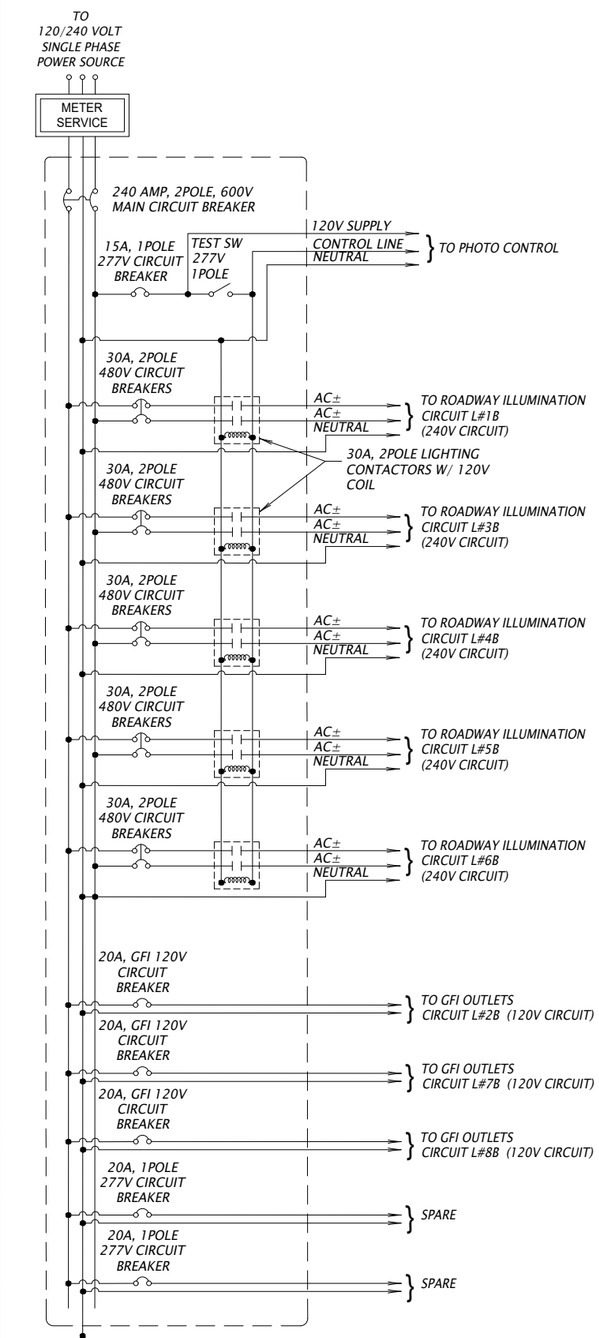

WIRING DIAGRAM

BASE MOUNTED CONTROL CABINET

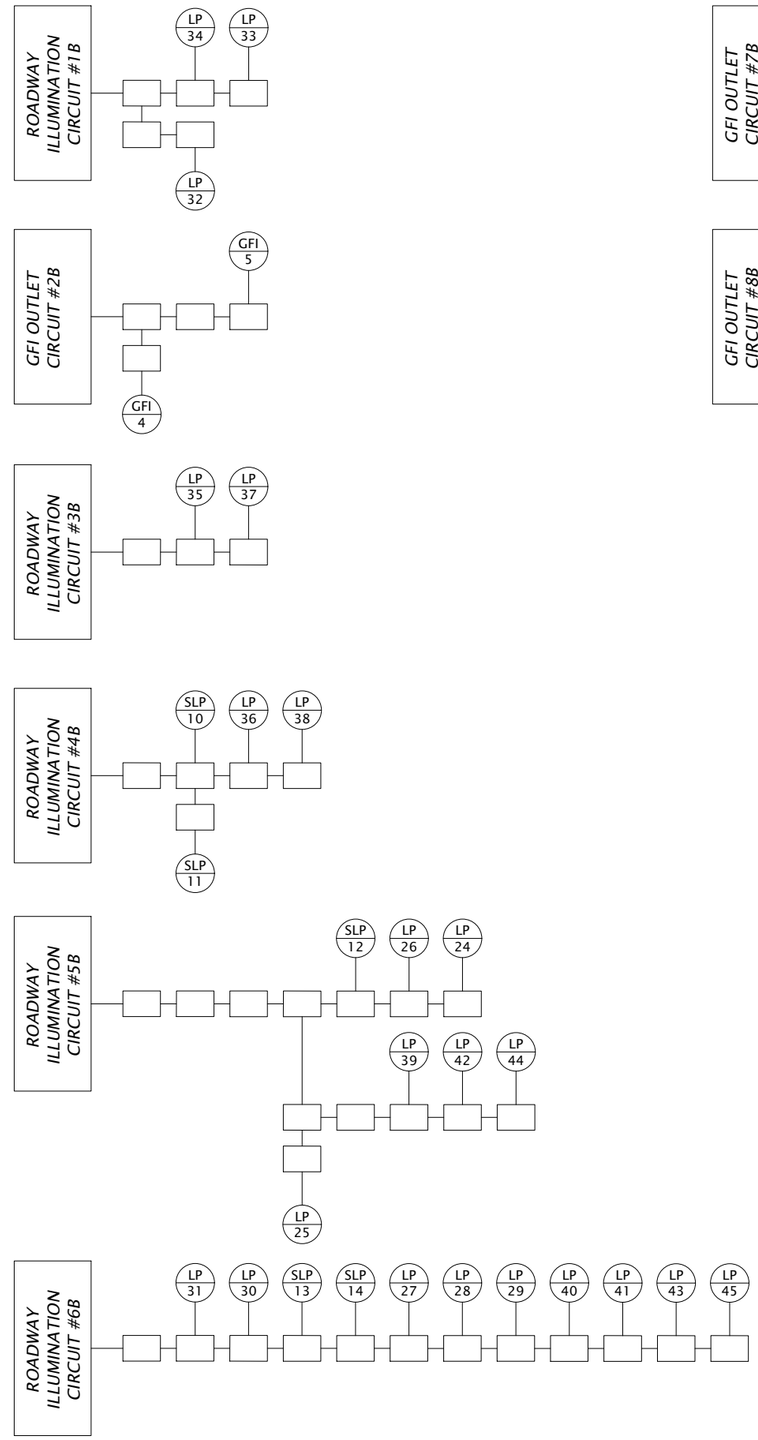

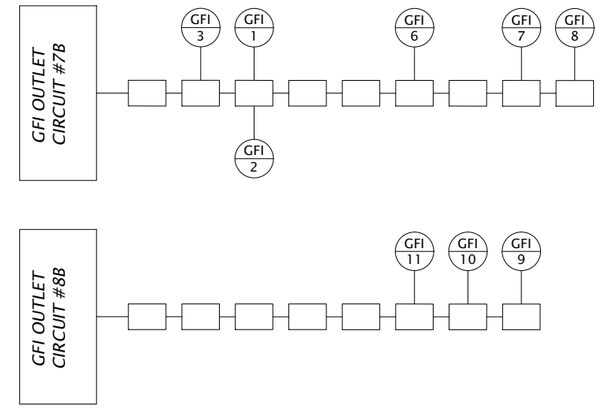

LEGEND

- Junction box
- GFI / N — *GFI Receptacles No. (N)*
- LP / (N) — *Proposed luminaire pole No. (N)*
- SLP / (N) — *Proposed luminaire pole on proposed raise stone foundation No. (N)*

City of St. Helens FOUNDED 1850

REGISTERED PROFESSIONAL ENGINEER 74348 OREGON JUNE 12, 2015 STEVEN J. BOICE

90% DESIGN

EXPIRES: DEC. 31, 2023

DKS

720 SW Washington St, Suite 500
Portland, Oregon 97205
www.dksassociates.com

S. 1ST AND STRAND STREETS
ROAD AND UTILITY EXTENSIONS
ST. HELENS, OREGON

ILLUMINATION DETAILS

TITLE

#	DATE	DESCRIPTION

REVISIONS

DATUM

RAS — DRAWN BY
SJB — CHECKED BY

90% DESIGN
STATUS

JANUARY 10, 2022
DATE

19823
PROJECT NUMBER

IL11

© 2021 OTAK, INC.

If this drawing is not 22" x 34", it has been reduced/enlarged. Scale accordingly.

Plotted: Jan 10, 2022 - 3:17am jacob.shelton X:\Projects\2021\P21058-000\St Helens 1st and Strand\CAD\IL11.dwg Layout Name: IL10

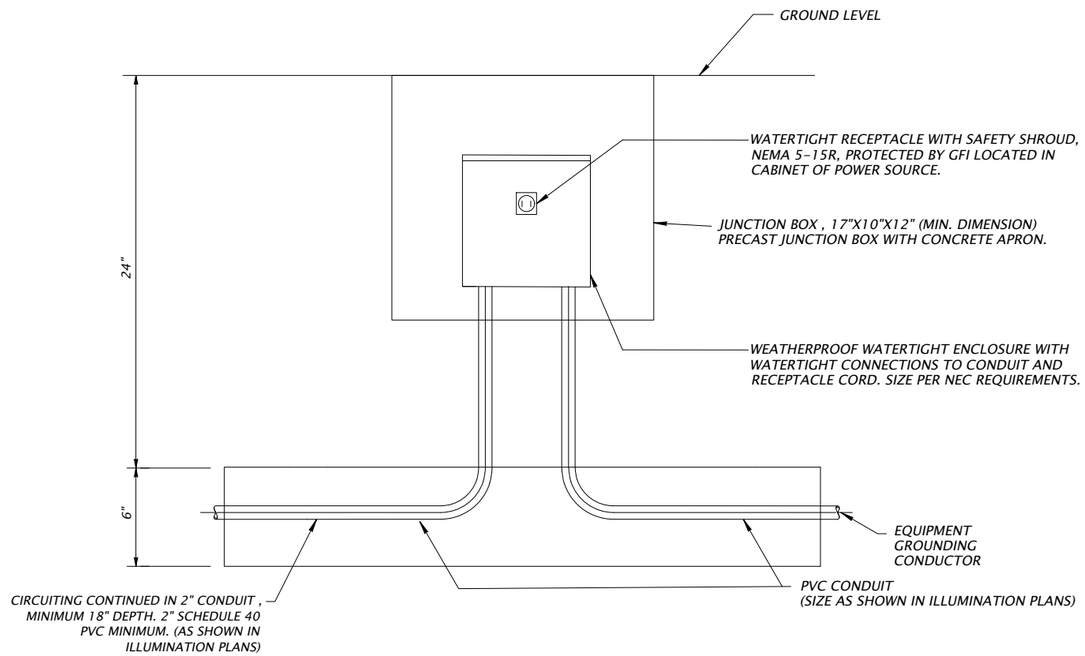

JUNCTION BOX AND GFI RECEPTACLE DETAIL

(NTS)

REGISTERED PROFESSIONAL ENGINEER 74,348 OREGON JUNE 12, 2015 STEVEN J. BOICE

90% DESIGN

EXPIRES: DEC. 31, 2023

DKS

720 SW Washington St, Suite 500
Portland, Oregon 97205
www.dksassociates.com

S. 1ST AND STRAND STREETS ROAD AND UTILITY EXTENSIONS

ST. HELENS, OREGON

ILLUMINATION DETAILS

TITLE

#	DATE	DESCRIPTION

REVISIONS

DATUM

RAS — DRAWN BY

SJB — CHECKED BY

90% DESIGN — STATUS

JANUARY 10, 2022 — DATE

19823 — PROJECT NUMBER

IL12

© 2021 OTAK, INC.

If this drawing is not 22" x 34", it has been reduced/enlarged. Scale accordingly.

Plotted: Jan 10, 2022 - 9:18am jacob.shelton X:\Projects\2021\P21058-000\St Helens 1st and Strand\CAD\IL12.dwg Layout Name: IL11

SIGNING/STRIPING LEGEND

LEGEND

Symbol	Description
W	*Install 4" white line. See sheet SS9 for details.*
Y	*Install 4" yellow line. See sheet SS9 for details.*
D	*Install double no-pass 4" yellow lines. See sheet SS9 for details.*
CW-SC	*Install staggered continental crosswalk. See sheet SS9 for details.*
CW	*Install standard crosswalk. See sheet SS9 for details.*
P	*Install on-street parking markings (white). See sheet SS9 for ....*
AP	*Install angled parking markings (white). See sheet SS9 for details.*
PP	*Install perpendicular parking markings (white). See sheet SS9 for details.*
SLM	*Install shared lane marking (white). See sheet SS9 for details.*
HC	*Install disabled parking space. See sheet SS9 for details.*
CRB	*Install yellow paint on top and face of curb. See sheet SS9 for details.*
N	*Install new sign (N)*
N / M	*Install new sign (N) on new (M) sign support*
RSN / M	*Remove and save existing sign (N) and remove (M) sign support*
RIN / M	*Reinstall existing sign (N) on new (M) sign support*
EXN	*Maintain and protect existing sign (N) and support*
RXN	*Remove existing sign (N)*
RXN / M	*Remove existing sign (N) and (M) sign support*

N = Sign number
M = Material:
P = Round pipe support with V-Lock
ST = Perforated steel square tube sign support

GENERAL NOTES

1. *Remove existing striping that conflicts with these Plans by method approved by the Engineer.*
2. *All permanent longitudinal striping shall be type "AB" thermoplastic, sprayed, surface, non-profiled installed per ODOT Standard Specifications Section 00865 (latest edition).*
3. *All parking lines shall be paint.*
4. *All Legends and bars shall be type "B-HS" performed, fused thermoplastic high-skid film, installed per ODOT Standard Specifications Section 00867 (latest edition).*
5. *Accompanied by ODOT Standard Drawings, TM200, TM201, TM500, TM503, TM520, TM530, TM560, and TM561, TM671, TM676, TM677.*

City of St. Helens

REGISTERED PROFESSIONAL ENGINEER
74,348
OREGON
JUNE 12, 2013
STEVEN J. BOICE
EXPIRES: DEC. 31, 2023
90% DESIGN

DKS
720 SW Washington St, Suite 500
Portland, Oregon 97205
www.dksassociates.com

S. 1ST AND STRAND STREETS
ROAD AND UTILITY EXTENSIONS
ST. HELENS, OREGON
SIGNING AND STRIPING PLANS
SIGNING AND STRIPING LEGEND

TITLE

#	DATE	DESCRIPTION

REVISIONS

DATUM

RAS — DRAWN BY
SJB — CHECKED BY
90% DESIGN — STATUS
JANUARY 10, 2022 — DATE
19823 — PROJECT NUMBER

SS1

© 2021 OTAK, INC.
If this drawing is not 22" x 34", it has been reduced/enlarged. Scale accordingly.

Plotted: Jan 09, 2022 - 9:27pm George Angaris X:\Projects\2021\P21058-000 (St Helens 1st and Strand)\CAD\SS1.dwg Layout Name: SS1

SIGNING/STRIPING PLAN

GENERAL NOTE

1. *Striping south of Tualatin Street is only required if the Add 2 Alternative improvements are included with the project.*

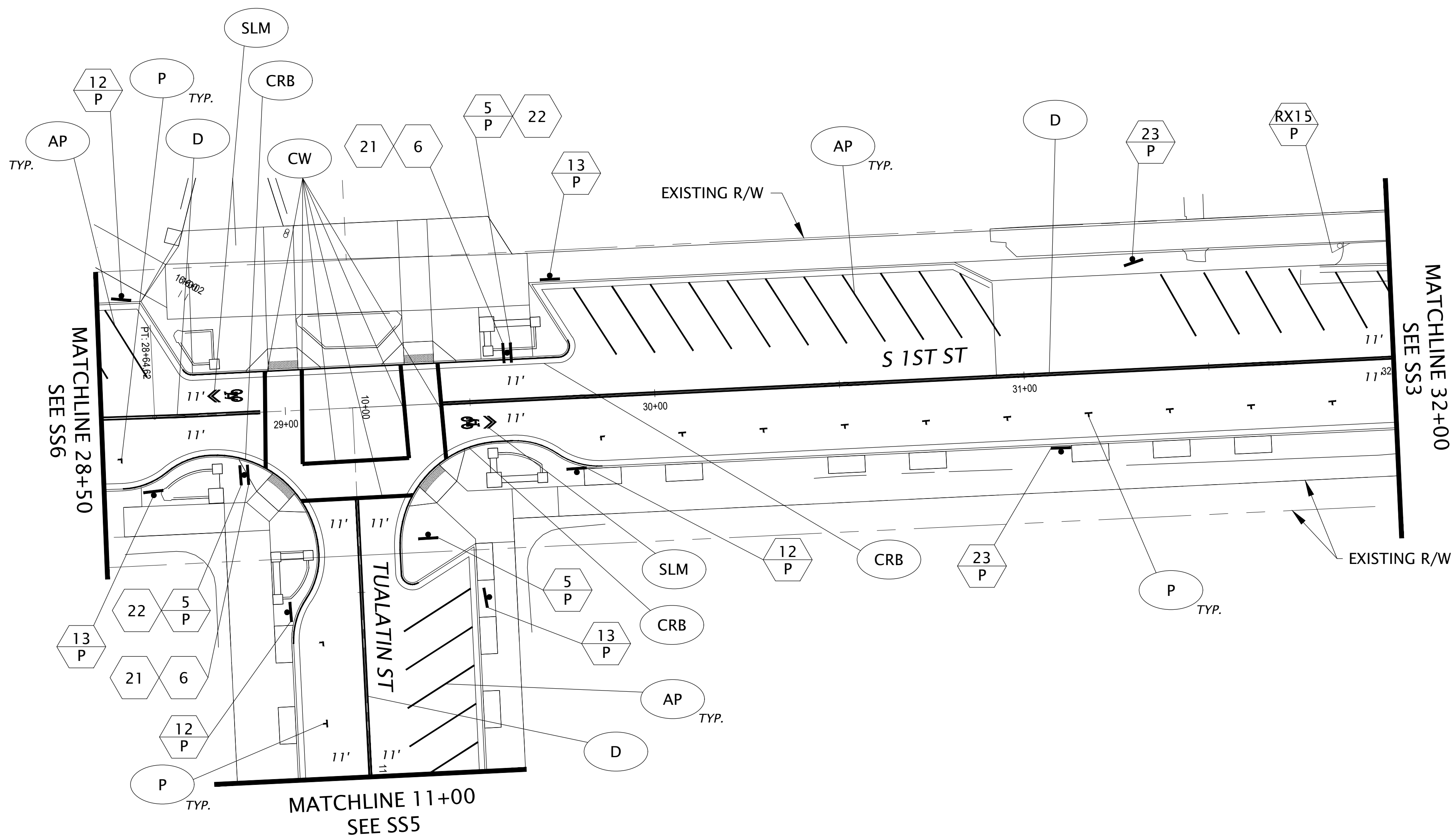

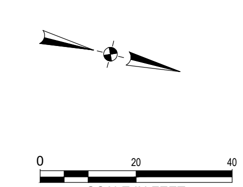

City of St. Helens

REGISTERED PROFESSIONAL ENGINEER 74,348 OREGON STEVEN J. BOICE
90% DESIGN
EXPIRES: DEC. 31, 2023

DKS
720 SW Washington St, Suite 500
Portland, Oregon 97205
www.dksassociates.com

S. 1ST AND STRAND STREETS ROAD AND UTILITY EXTENSIONS
ST. HELENS, OREGON
SIGNING AND STRIPING PLANS

SIGNING AND STRIPING PLAN

TITLE

#	DATE	DESCRIPTION

REVISIONS

DATUM

RAS — DRAWN BY
SJB — CHECKED BY

90% DESIGN — STATUS

JANUARY 10, 2022 — DATE

19823 — PROJECT NUMBER

SS2

© 2021 OTAK, INC.

If this drawing is not 22" x 34", it has been reduced/enlarged. Scale accordingly.

Plotted: Jan 09, 2022 - 9:27pm George Angaris X:\Projects\2021\P21058-000 (St Helens 1st and Strand)\CAD\SS2.dwg Layout Name: SS2

SIGNING/STRIPING PLAN

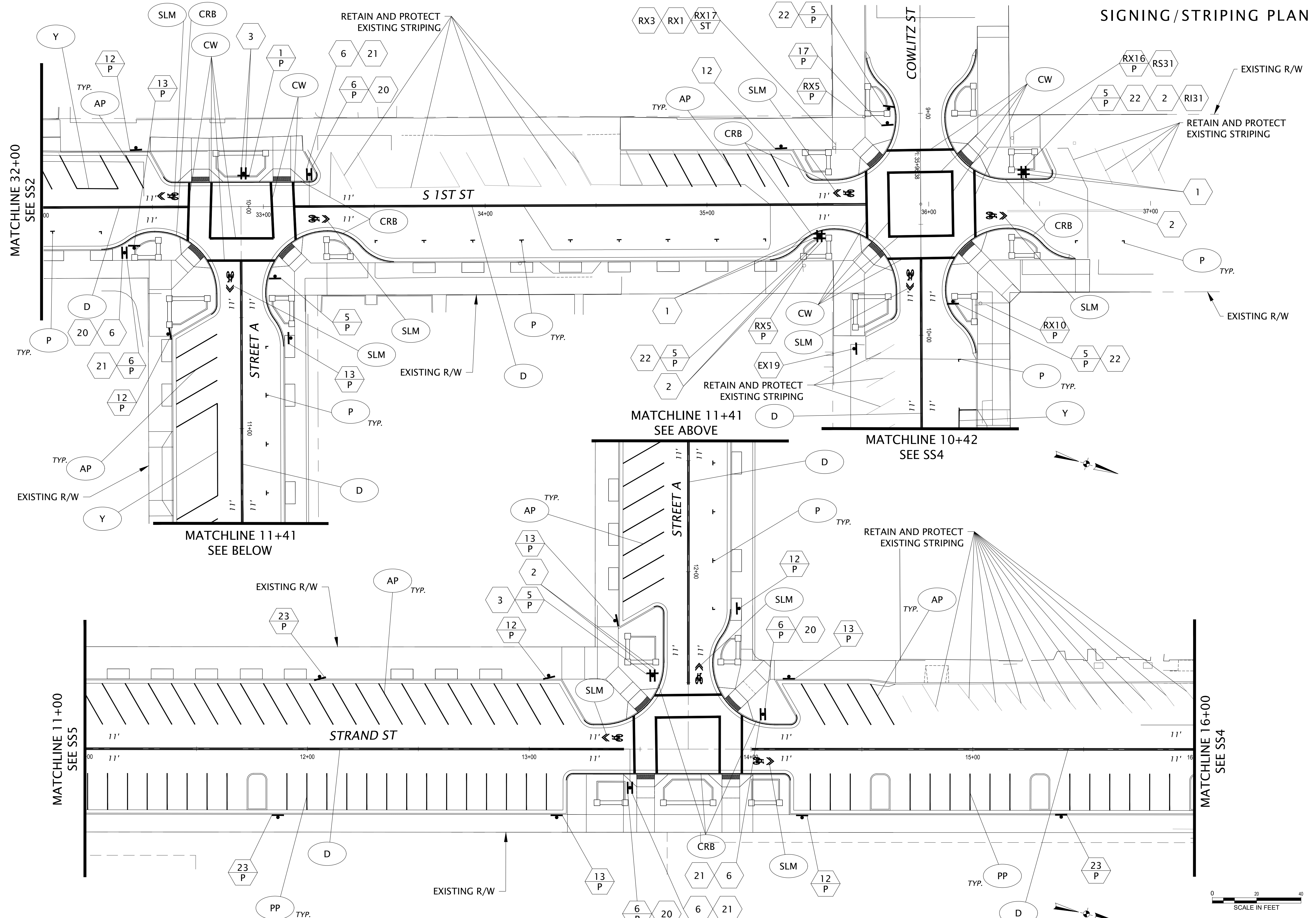

Plotted: Jan 09, 2022 - 9:26pm George Angelis X:\Projects\2021\P21058-000 (St Helens 1st and Strand)\CAD\SS3.dwg Layout Name: SS3

City of St. Helens
FOUNDED 1850

REGISTERED PROFESSIONAL ENGINEER
74,348
OREGON
JUNE 12, 2013
STEVEN J. BOICE
EXPIRES: DEC. 31, 2023
90% DESIGN

DKS
720 SW Washington St, Suite 500
Portland, Oregon 97205
www.dksassociates.com

S. 1ST AND STRAND STREETS ROAD AND UTILITY EXTENSIONS

ST. HELENS, OREGON
SIGNING AND STRIPING PLANS

SIGNING AND STRIPING PLAN

TITLE

#	DATE	DESCRIPTION

REVISIONS

DATUM

RAS — DRAWN BY
SJB — CHECKED BY

90% DESIGN
STATUS

JANUARY 10, 2022
DATE

19823
PROJECT NUMBER

SS3

© 2021 OTAK, INC.

If this drawing is not 22" x 34", it has been reduced/enlarged. Scale accordingly.

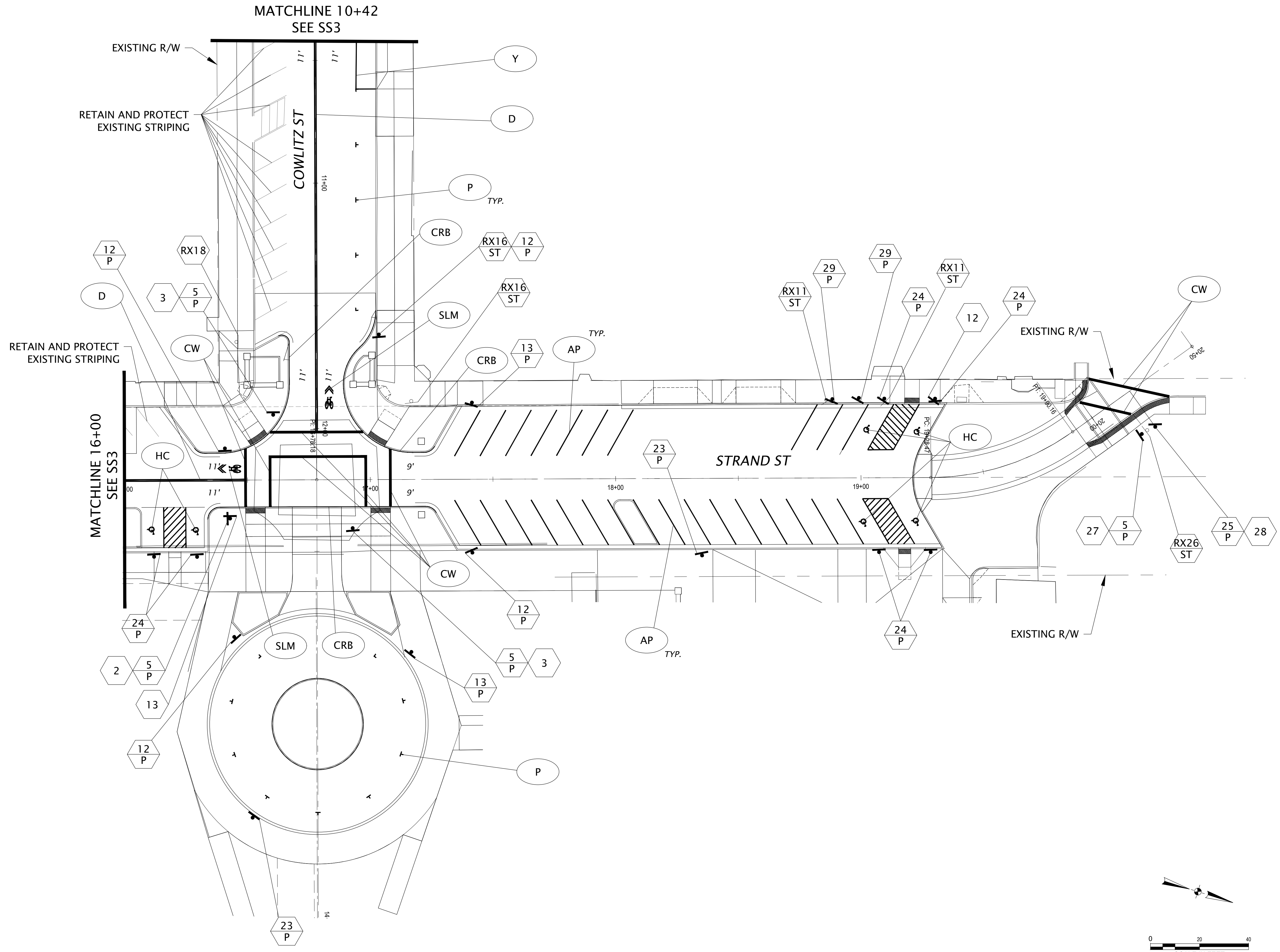

DKS
720 SW Washington St, Suite 500
Portland, Oregon 97205
www.dksassociates.com

90% DESIGN
EXPIRES: DEC. 31, 2023

S. 1ST AND STRAND STREETS ROAD AND UTILITY EXTENSIONS

ST. HELENS, OREGON
SIGNING AND STRIPING PLANS

SIGNING AND STRIPING PLAN

TITLE

#	DATE	DESCRIPTION

REVISIONS

DATUM

RAS — DRAWN BY
SJB — CHECKED BY

90% DESIGN — STATUS

JANUARY 10, 2022 — DATE

19823 — PROJECT NUMBER

SS4

© 2021 OTAK, INC.

If this drawing is not 22" x 34", it has been reduced/enlarged. Scale accordingly.

SIGNING/STRIPING PLAN

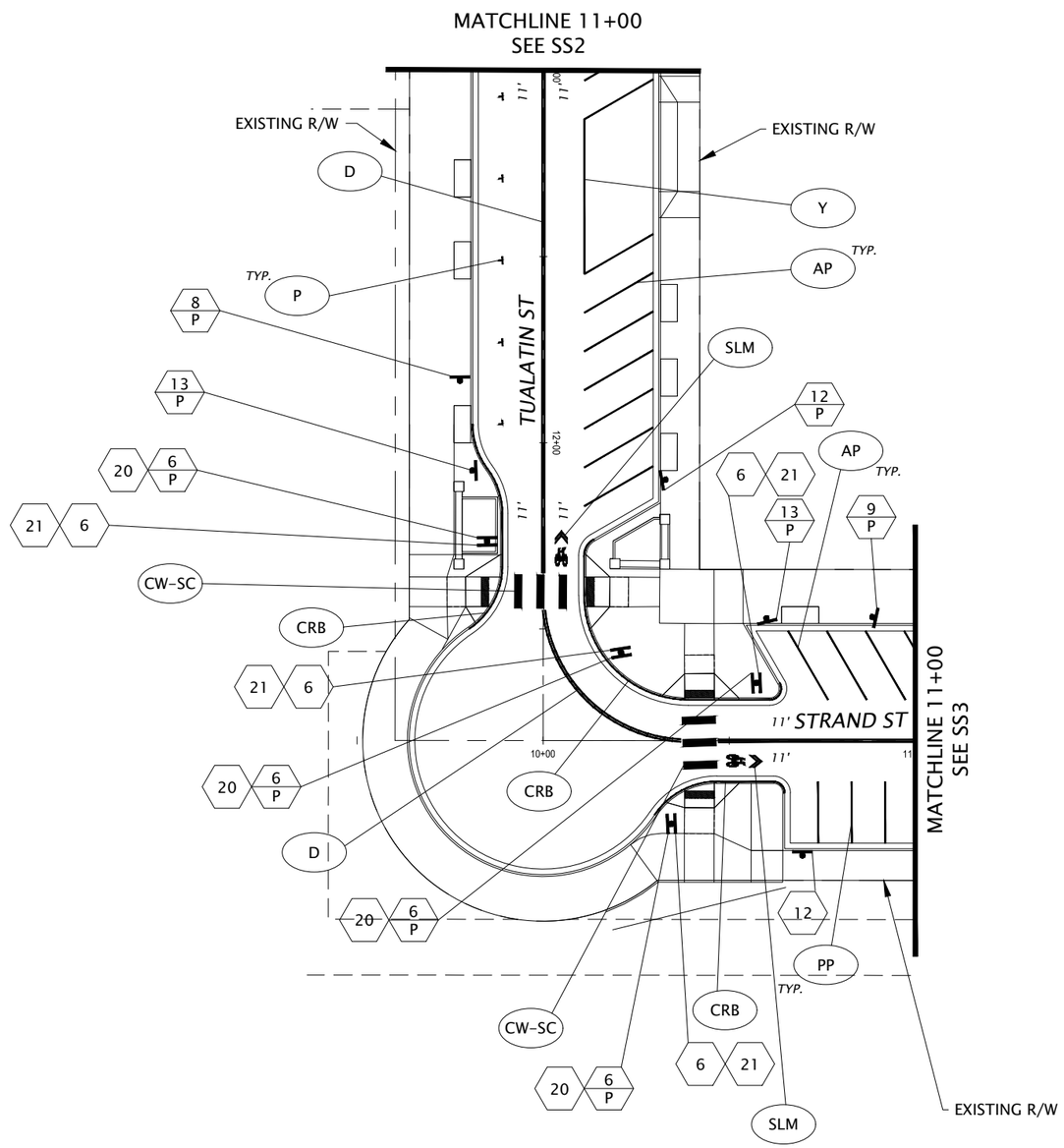

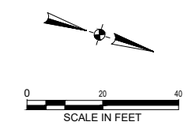

City of St. Helens
FOUNDED 1850

REGISTERED PROFESSIONAL ENGINEER
74,348
OREGON
JUNE 12, 2015
STEVEN J. BOICE
EXPIRES: DEC. 31, 2023

90% DESIGN

DKS

720 SW Washington St, Suite 500
Portland, Oregon 97205
www.dksassociates.com

S. 1ST AND STRAND STREETS
ROAD AND UTILITY EXTENSIONS
ST. HELENS, OREGON
SIGNING AND STRIPING PLANS

SIGNING AND STRIPING PLAN

TITLE

#	DATE	DESCRIPTION

REVISIONS

DATUM

RAS — DRAWN BY
SJB — CHECKED BY

90% DESIGN
STATUS

JANUARY 10, 2022
DATE

19823
PROJECT NUMBER

SS5

© 2021 OTAK, INC.

If this drawing is not 22" x 34", it has been reduced/enlarged. Scale accordingly.

Plotted: Jan 09, 2022 - 9:25pm George Angelis X:\Projects\2021\21058-000 (St Helens 1st and Strand)\CAD\SS5.dwg Layout Name: SS5

SIGNING/STRIPING PLAN

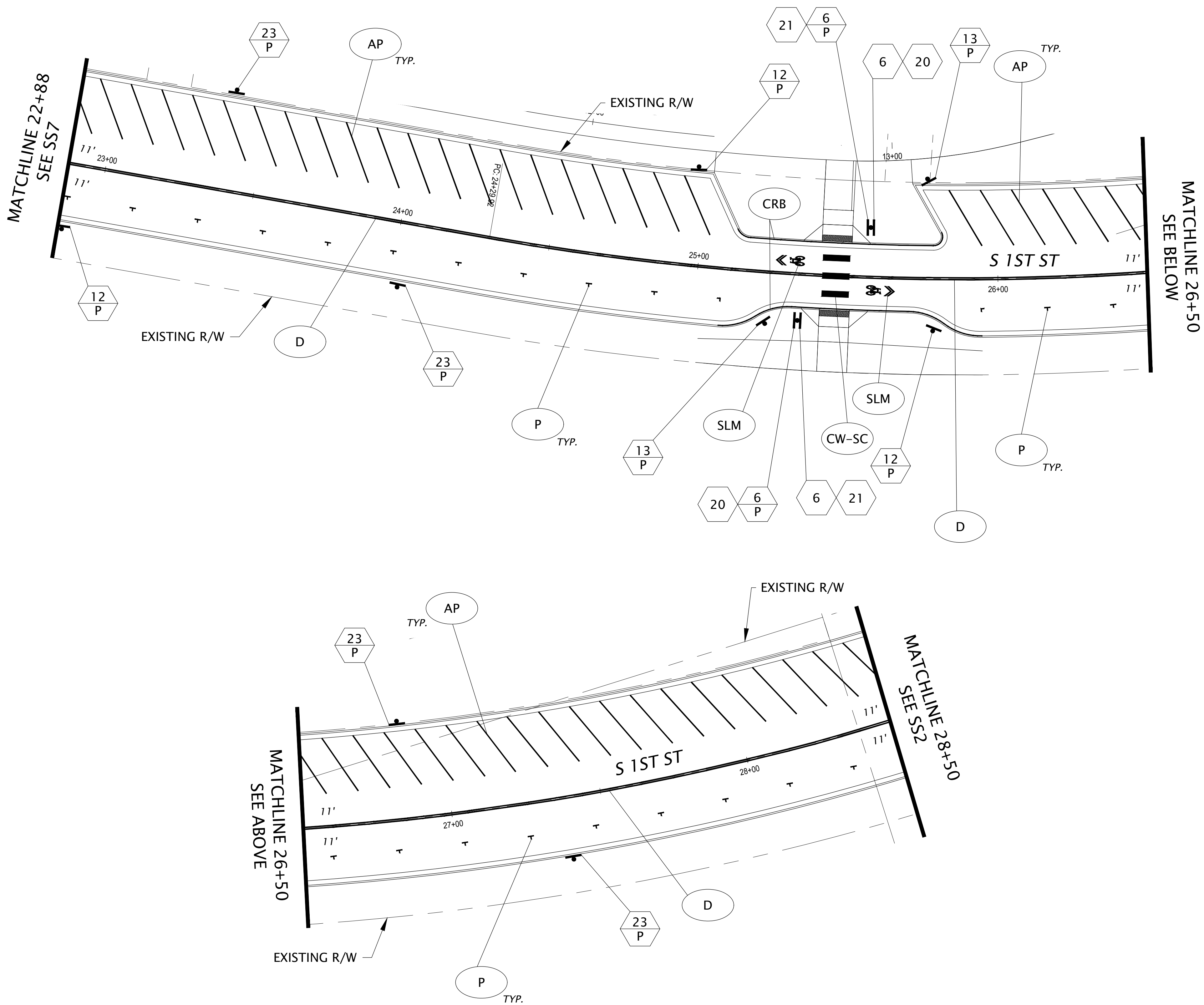

0 20 40
SCALE IN FEET

720 SW Washington St, Suite 500
Portland, Oregon 97205
www.dksassociates.com

REGISTERED PROFESSIONAL ENGINEER
OREGON
STEVEN J. BOICE
EXPIRES: DEC. 31, 2023
90% DESIGN

S. 1ST AND STRAND STREETS
ROAD AND UTILITY EXTENSIONS
ST. HELENS, OREGON
SIGNING AND STRIPING PLANS

SIGNING AND STRIPING PLAN

TITLE

#	DATE	DESCRIPTION

REVISIONS

DATUM

RAS — DRAWN BY
SJB — CHECKED BY

90% DESIGN
STATUS

JANUARY 10, 2022
DATE

19823
PROJECT NUMBER

SS6

© 2021 OTAK, INC.

If this drawing is not 22" x 34", it has been reduced/enlarged. Scale accordingly.

Plotted: Jan 09, 2022 - 9:24pm George.Anganis X:\Projects\2021\P21058-000 (St Helens 1st and Strand)\CAD\SS6.dwg Layout Name: SS6

SIGNING/STRIPING PLAN

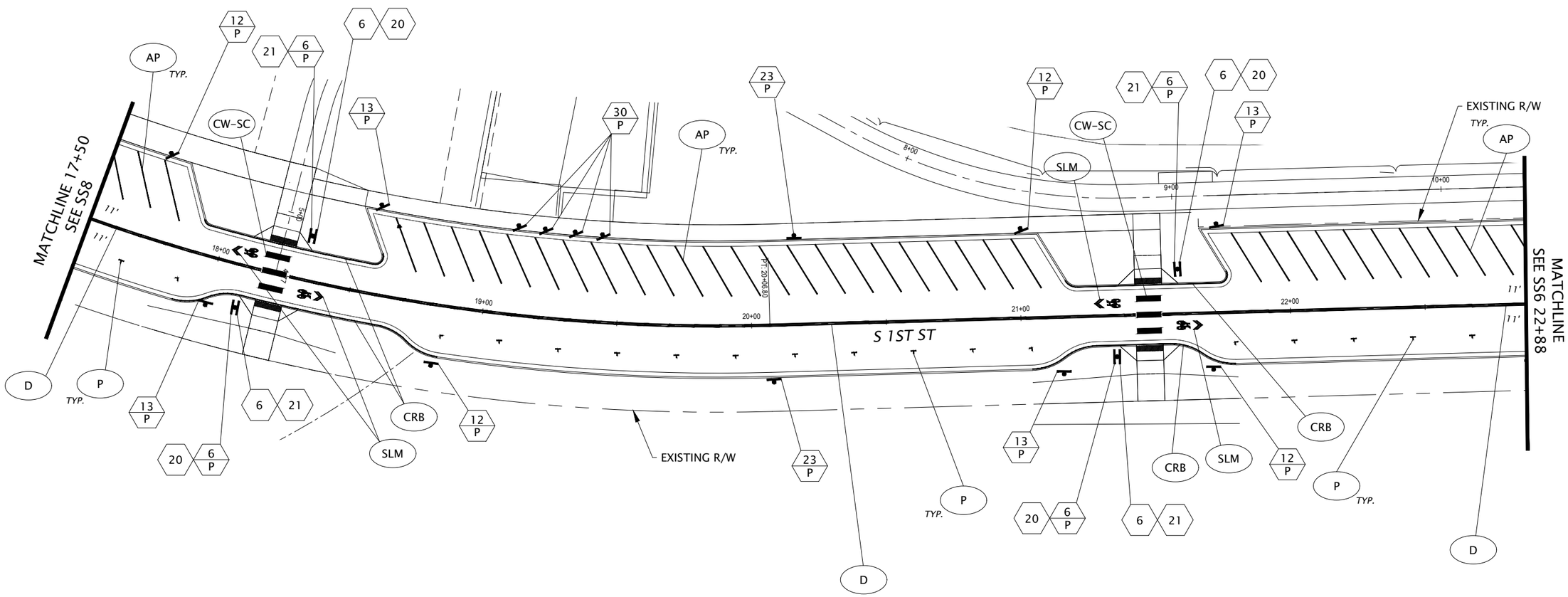

0 20 40
SCALE IN FEET

City of St. Helens
FOUNDED 1850

REGISTERED PROFESSIONAL ENGINEER
74,348
OREGON
JUNE 12, 2015
STEVEN J. BOICE
90% DESIGN
EXPIRES: DEC. 31, 2023

DKS

720 SW Washington St, Suite 500
Portland, Oregon 97205
www.dksassociates.com

S. 1ST AND STRAND STREETS
ROAD AND UTILITY EXTENSIONS
ST. HELENS, OREGON
SIGNING AND STRIPING PLANS

SIGNING AND STRIPING PLAN

TITLE

#	DATE	DESCRIPTION

REVISIONS

DATUM

RAS — DRAWN BY
SJB — CHECKED BY

90% DESIGN
STATUS

JANUARY 10, 2022
DATE

19823
PROJECT NUMBER

SS7

© 2021 OTAK, INC.

If this drawing is not 22" x 34", it has been reduced/enlarged. Scale accordingly.

Plotted: Jan 03, 2022 - 3:22pm, George Angelis X:\Projects\2021\P21058-000\St Helens 1st and Strand\CAD\SS7.dwg Layout Name: SS7

SIGNING/STRIPING PLAN

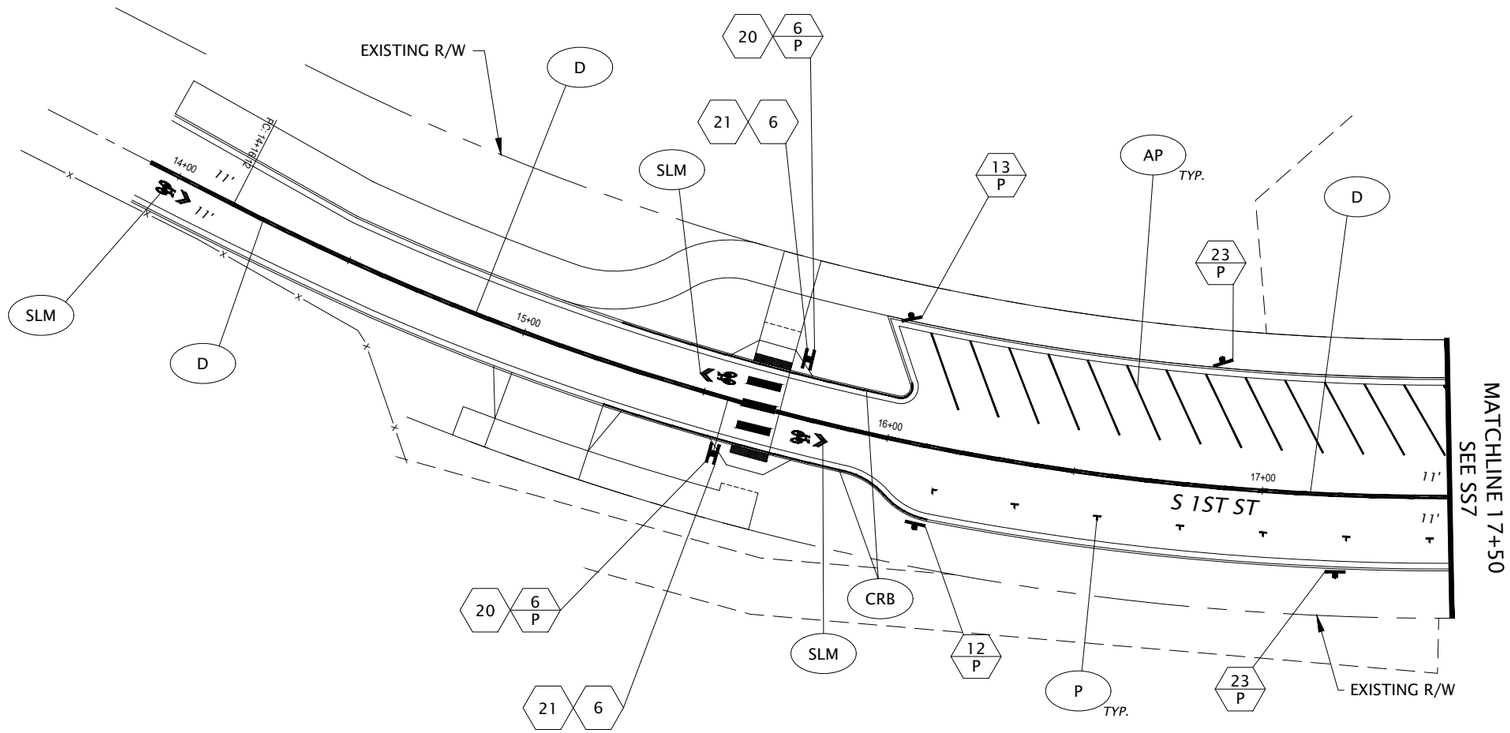

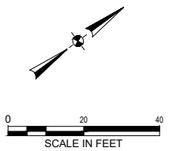

REGISTERED PROFESSIONAL ENGINEER
74,348
OREGON
JUNE 12, 2015
STEVEN J. BOICE
90% DESIGN
EXPIRES: DEC. 31, 2023

DKS

720 SW Washington St, Suite 500
Portland, Oregon 97205
www.dksassociates.com

S. 1ST AND STRAND STREETS
ROAD AND UTILITY EXTENSIONS
ST. HELENS, OREGON
SIGNING AND STRIPING PLANS
SIGNING AND STRIPING PLAN

TITLE

#	DATE	DESCRIPTION

REVISIONS

DATUM

RAS — DRAWN BY
SJB — CHECKED BY

90% DESIGN
STATUS

JANUARY 10, 2022
DATE

19823
PROJECT NUMBER

SS8

© 2021 OTAK, INC.

If this drawing is not 22" x 34", it has been reduced/enlarged. Scale accordingly.

Plotted: Jan 09, 2022 - 3:22pm Georgia Angelis X:\Projects\2021\P21058-000 St Helens 1st and Strand\CAD\SS8.dwg Layout Name: SS8

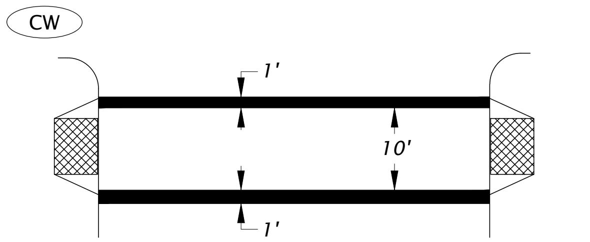

STANDARD CROSSWALK
TWO 1' WHITE BARS
Install per Standard Drawing TM530

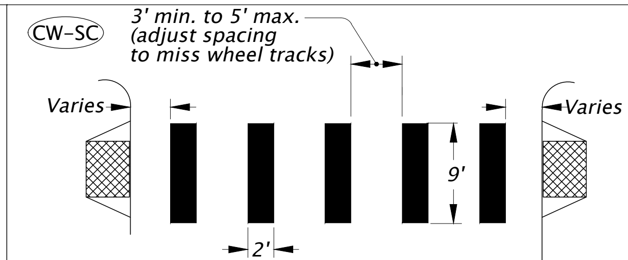

STAGGERED CONTINENTAL CROSSWALK
2' WHITE BARS
Install per Standard Drawing TM530

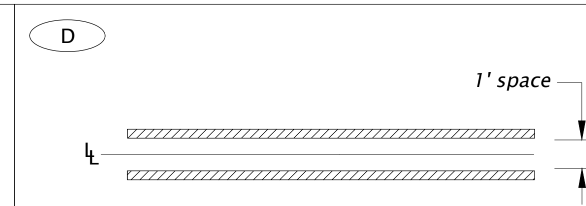

DOUBLE NO-PASS
TWO 4" YELLOW LINES

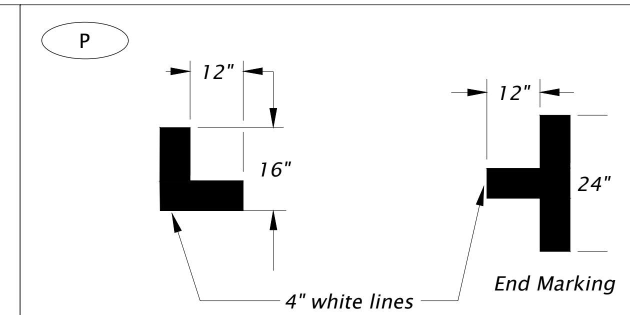

ON-STREET PARKING DETAIL (white)

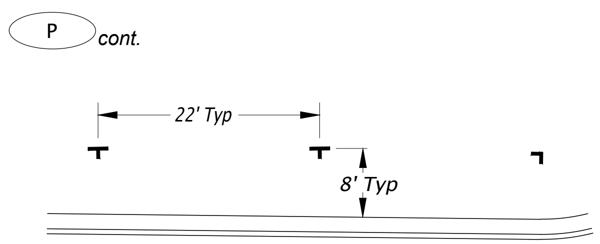

ON-STREET PARKING
TYPICAL INSTALLATION

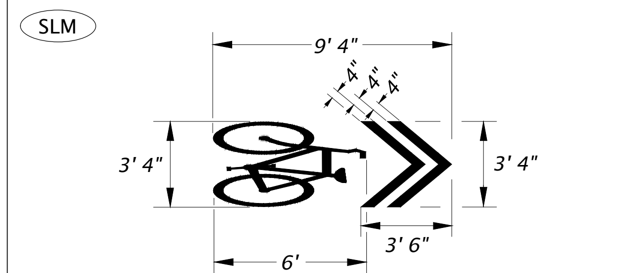

SHARED LANE MARKING (white)
Center marking within lane width or as shown
For proportion details, see current version of Standard Highway Signs

4" WHITE LINE

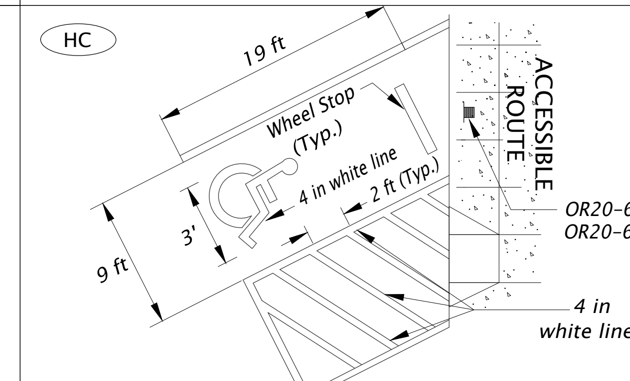

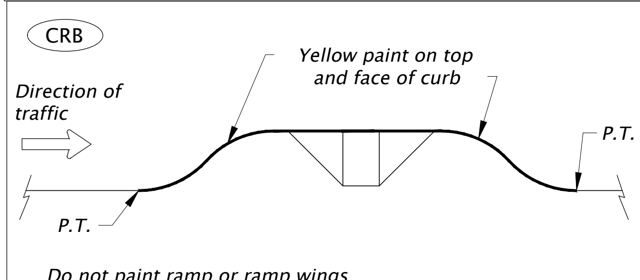

CURB PAVEMENT MARKINGS

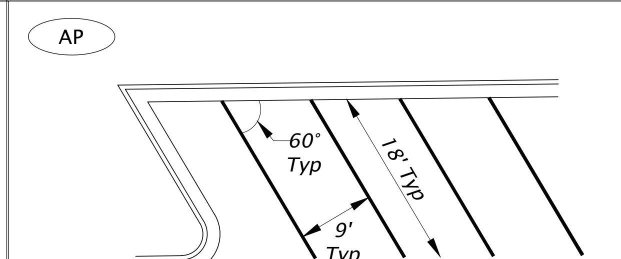

ANGLED PARKING TYPICAL
INSTALLATION

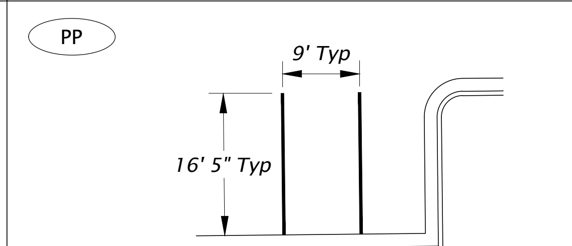

PERPENDICULAR PARKING
TYPICAL INSTALLATION

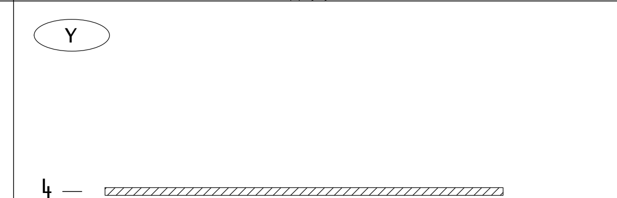

4" YELLOW LINE

REGISTERED PROFESSIONAL ENGINEER
74,348
OREGON
JUNE 12, 2013
STEVEN J. BOICE
EXPIRES: DEC. 31, 2023
90% DESIGN

DKS
720 SW Washington St, Suite 500
Portland, Oregon 97205
www.dksassociates.com

S. 1ST AND STRAND STREETS
ROAD AND UTILITY EXTENSIONS
ST. HELENS, OREGON
SIGNING AND STRIPING PLANS

STRIPING DETAILS

TITLE

#	DATE	DESCRIPTION

REVISIONS

DATUM

RAS — DRAWN BY
SJB — CHECKED BY

90% DESIGN — STATUS

JANUARY 10, 2022 — DATE

19823 — PROJECT NUMBER

SS9

© 2021 OTAK, INC.
If this drawing is not 22" x 34", it has been reduced/enlarged. Scale accordingly.

Plotted: Jan 09, 2022 - 9:21pm George Angeris X:\Projects\2021\P21058-000 (St Helens 1st and Strand)\CAD\SS9.dwg Layout Name: SS9

SIGNING DETAILS

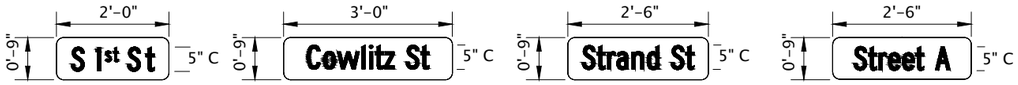

**Sign No. 1 | **Sign No. 2 | **Sign No. 3 | **Sign No. 4

R1-1
Sign No. 5

W11-2
Sign No. 6

W16-9P
Sign No. 7
(Not Used)

W1-1L
Sign No. 8

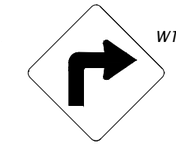

W1-1R
Sign No. 9

Sign No. 10

Sign No. 11

R7-108
Sign No. 12

R7-108
Sign No. 13

Sign No. 14
(Not Used)

Sign No. 15

Sign No. 16

W14-2
Sign No. 17

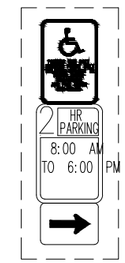

Sign No. 18

Sign No. 19

W16-7PL
Sign No. 20

W16-7PR
Sign No. 21

R1-3P
Sign No. 22

R7-108
Sign No. 23

R7-8
Sign No. 24

R5-1
Sign No. 25

R1-2
Sign No. 26

OR3-5R
Sign No. 27

R6-1L
Sign No. 28

R7-108
Sign No. 29

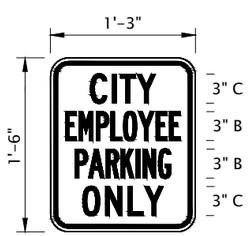

Sign No. 30

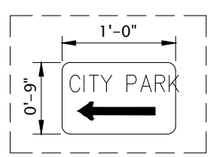

Sign No. 31

** = Double-sided sign

NOTE:
Signs shown with broken borders are existing signs.

City of St. Helens
FOUNDED 1850

REGISTERED PROFESSIONAL ENGINEER
74,348
OREGON
JUNE 12, 2015
STEVEN J. BOICE
90% DESIGN
EXPIRES: DEC. 31, 2023

DKS

720 SW Washington St, Suite 500
Portland, Oregon 97205
www.dksassociates.com

S. 1ST AND STRAND STREETS
ROAD AND UTILITY EXTENSIONS
ST. HELENS, OREGON
SIGNING AND STRIPING PLANS
SIGNING DETAILS

TITLE

#	DATE	DESCRIPTION

REVISIONS

DATUM

RAS — DRAWN BY
SJB — CHECKED BY

90% DESIGN
STATUS

JANUARY 10, 2022
DATE

19823
PROJECT NUMBER

SS10

© 2021 OTAK, INC.

If this drawing is not 22" x 34", it has been reduced/enlarged. Scale accordingly.

Plotted: Jan 09, 2022 - 9:21pm George.Argyris X:\Projects\2021\21058-000 (St. Helens 1st and Strand)\CAD\SS10.dwg Layout Name: SS10

SIGNING DETAILS

SIGN NO.	SIGN LOCATION 4/	SIGN DIMENSIONS		SUB-STRATE			COLOR 1/					LEGEND TYPE		SIGN NO. 2/	TYPE OF SUPPORT															POST		FOOTING		REMARKS
							BACK- GROUND		LEGEND																					SIZE	LENGTH	LOCATION 3/	MIN. DEPTH 5/	
		WIDTH	HEIGHT	PLYWOOD	SHEET ALUMINUM	EXTRUDED ALUMINUM	ASTM TYPE III OR TYPE IV	ASTM TYPE IX	ASTM TYPE III OR TYPE IV	ASTM TYPE IX	NON-REFLECTIVE	PERMANENT	DEMOUNTABLE		WOOD POST (ODOT TM670-671, TM676)	SINGLE PIPE POST (SCH 40)	PERF. STEEL SQUARE TUBE (ODOT TM671, TM676, TM681, TM687-689)	TRIANGULAR BASE BREAKAWAY (ODOT TM602)	MULTI-POST BREAKAWAY (ODOT TM220, TM600-601)	STAINLESS STEEL CLAMP (SSC) (TM677)	SIGNAL POLE MOUNT (ODOT TM680)	CROSSWALK CLOSURE BARRICADE (ODOT TM240)	VERTICAL SIGN MOUNT ON EXISTING STRUCTURE	EXISTING PIPE POST	MILEPOST MARKER POST	ADJUSTABLE SIGN MOUNT	MAST ARM SNS MOUNT	C 4 X 5.4	C 4 X 7.25	LENGTH (FT.)	(BASED ON ESTIMATED LENGTH)	(MUST BE FIELD VERIFIED)			
1	"1st Street" 32+91 RT	24"	9"		✓		G		SW			✓		1		✓														2-3/8"	12'	15'		
1	"1st Street" 35+50 RT	24"	9"		✓		G		SW			✓		1																		14'		MOUNT BACK TO BACK WITH SIGN 1
1	"1st Street" 35+50 RT	24"	9"		✓		G		SW			✓		1																		14'		MOUNT BACK TO BACK WITH SIGN 1
1	"1st Street" 36+43 LT	24"	9"		✓		G		SW			✓		1																		14'		MOUNT BACK TO BACK WITH SIGN 1
1	"1st Street" 36+43 LT	24"	9"		✓		G		SW			✓		1																		14'		MOUNT BACK TO BACK WITH SIGN 1
2	"1st Street" 35+50 RT	36"	9"		✓		G		SW			✓		2																		14'		MOUNT BACK TO BACK WITH SIGN 2
2	"1st Street" 35+50 RT	36"	9"		✓		G		SW			✓		2																		14'		MOUNT BACK TO BACK WITH SIGN 2
2	"1st Street" 36+43 LT	36"	9"		✓		G		SW			✓		2																		14'		MOUNT BACK TO BACK WITH SIGN 2
2	"1st Street" 36+43 LT	36"	9"		✓		G		SW			✓		2																		14'		MOUNT BACK TO BACK WITH SIGN 2
2	"Strand Street" 16+43 RT	36"	9"		✓		G		SW			✓		2																		16'		
2	"Street A" 12+46 RT	36"	9"		✓		G		SW			✓		2																		16'		MOUNT BACK TO BACK WITH SIGN 2
2	"Street A" 12+46 RT	36"	9"		✓		G		SW			✓		2																		16'		MOUNT BACK TO BACK WITH SIGN 2
3	"1st Street" 32+91 RT	30"	9"		✓		G		SW			✓		3																		15'		MOUNT BACK TO BACK WITH SIGN 3
3	"1st Street" 32+91 RT	30"	9"		✓		G		SW			✓		3																		15'		MOUNT BACK TO BACK WITH SIGN 3
3	"Cowlitz St" 11+94 RT	30"	9"		✓		G		SW			✓		3																		18'		
3	"Cowlitz St" 12+41 LT	30"	9"		✓		G		SW			✓		3																		14'		
3	"Street A" 12+46 RT	30"	9"		✓		G		SW			✓		3																		16'		
5	"1st Street" 18+88 RT	30"	30"		✓		R		SW			✓		5		✓														2-3/8"	12'	17'		MOUNT WITH SIGN 22
5	"1st Street" 29+60 LT	30"	30"		✓		R		SW			✓		5		✓														2-3/8"	12'	13'		MOUNT WITH SIGN 22
5	"1st Street" 35+50 RT	30"	30"		✓		R		SW			✓		5		✓														2-3/8"	12'	14'		MOUNT WITH SIGN 22
5	"1st Street" 36+43 LT	30"	30"		✓		R		SW			✓		5		✓														2-3/8"	12'	14'		MOUNT WITH SIGN 22 & 31
5	"Cowlitz St" 11+94 RT	30"	30"		✓		R		SW			✓		5		✓														2-3/8"	12'	18'		
5	"Cowlitz St" 12+41 LT	30"	30"		✓		R		SW			✓		5		✓														2-3/8"	12'	14'		
5	"Cowlitz St" 8+98 RT	30"	30"		✓		R		SW			✓		5		✓														2-3/8"	12'	14'		MOUNT WITH SIGN 22
5	"Cowlitz St" 9+85 LT	30"	30"		✓		R		SW			✓		5		✓														2-3/8"	12'	14'		MOUNT WITH SIGN 22
5	"Strand Street" 16+43 RT	30"	30"		✓		R		SW			✓		5		✓														2-3/8"	12'	16'		
5	"Strand Street" 20+12 RT	30"	30"		✓		R		SW			✓		5		✓														2-3/8"	12'	17'		
5	"Street A" 10+31 LT	30"	30"		✓		R		SW			✓		5		✓														2-3/8"	12'	15'		
5	"Street A" 12+46 RT	30"	30"		✓		R		SW			✓		5		✓														2-3/8"	12'	16'		
5	"Tualatin St" 10+35 LT	30"	30"		✓		R		SW			✓		5		✓														2-3/8"	12'	18'		

1/
BK=BLACK
BL=BLUE
BR=BROWN
FY=FLUORESCENT YELLOW
G=GREEN
O=ORANGE
P=PURPLE
R=RED
RB=RED-BLUE
SW=SILVER-WHITE
W=WHITE
Y=YELLOW

2/
NOTE: L,C,R ARE LOCATIONS OF POSTS FACING THE SIGN.

L = LEFT POST
C = CENTER POST
R = RIGHT POST

3/
DISTANCE FROM EDGE OF PAVEMENT, FACE OF CURB, GUARDRAIL, OR BARRIER TO THE CENTERLINE OF FOOTING. FOR ADDITIONAL INFORMATION SEE STANDARD DRAWINGS TM600, TM602, AND TM635

4/
NOTE: THE LOCATIONS SHOWN ARE APPROXIMATE EXCEPT FOR SPEED ZONES, SCHOOL ZONES, OBJECT MARKERS AND MILEPOST MARKERS. EXACT LOCATIONS ARE TO BE DETERMINED BY THE ENGINEER

5/
MINIMUM DEPTH OF FOOTING FOR TRIANGULAR BASE BREAKAWAY AND MULTI-POST BREAKAWAY INSTALLATIONS IS FOR A 2' DIAMETER FOOTING. FOR ADDITIONAL INFORMATION SEE STANDARD DRAWINGS TM601 AND TM602.

City of St. Helens
FOUNDED 1850

REGISTERED PROFESSIONAL ENGINEER
74,348
OREGON
JUNE 12, 2015
STEVEN J. BOICE
EXPIRES: DEC. 31, 2023

90% DESIGN

DKS
720 SW Washington St, Suite 500
Portland, Oregon 97205
www.dksassociates.com

S. 1ST AND STRAND STREETS ROAD AND UTILITY EXTENSIONS
ST. HELENS, OREGON
SIGNING AND STRIPING PLANS
SIGNING DETAILS

TITLE

#	DATE	DESCRIPTION

REVISIONS

DATUM

RAS — DRAWN BY
SJB — CHECKED BY

90% DESIGN
STATUS

JANUARY 10, 2022
DATE

19823
PROJECT NUMBER

SS11

© 2021 OTAK, INC.

If this drawing is not 22" x 34", it has been reduced/enlarged. Scale accordingly.

Plotted: Jan 03, 2022 - 9:21pm, George.Angelis X:\Projects\2021\21058-000 (St. Helens 1st and Strand)\CAD\SS11.dwg Layout Name: SS11

SIGNING DETAILS

SIGN NO.	SIGN LOCATION 4/	SIGN DIMENSIONS		SUB-STRATE			COLOR 1/					LEGEND TYPE		SIGN NO. 2/	TYPE OF SUPPORT															POST		FOOTING		REMARKS
							BACK- GROUND		LEGEND																					SIZE	LENGTH	LOCATION 3/	MIN. DEPTH 5/	
		WIDTH	HEIGHT	PLYWOOD	SHEET ALUMINUM	EXTRUDED ALUMINUM	ASTM TYPE III OR TYPE IV	ASTM TYPE IX	ASTM TYPE III OR TYPE IV	ASTM TYPE IX	NON-REFLECTIVE	PERMANENT	DEMOUNTABLE		WOOD POST (ODOT TM670-671, TM676)	SINGLE PIPE POST (SCH 40)	PERF. STEEL SQUARE TUBE (ODOT TM671, TM676, TM681, TM687-689)	TRIANGULAR BASE BREAKAWAY (ODOT TM602)	MULTI-POST BREAKAWAY (ODOT TM220, TM600-601)	STAINLESS STEEL CLAMP (SSC) (TM677)	SIGNAL POLE MOUNT (ODOT TM680)	CROSSWALK CLOSURE BARRICADE (ODOT TM240)	VERTICAL SIGN MOUNT ON EXISTING STRUCTURE	EXISTING PIPE POST	MILEPOST MARKER POST	ADJUSTABLE SIGN MOUNT	MAST ARM SNS MOUNT	C 4 X 5.4	C 4 X 7.25	LENGTH (FT.)	(BASED ON ESTIMATED LENGTH)	(MUST BE FIELD VERIFIED)			
6	"1St Street" 15+57 RT	30"	30"		✓		O		BK			✓		6		✓														2-3/8"	12'	15'		MOUNT WITH SIGN 20
6	"1St Street" 15+57 RT	30"	30"		✓		O		BK			✓		6																		15'		MOUNT WITH SIGN 21
6	"1St Street" 15+75 LT	30"	30"		✓		O		BK			✓		6		✓														2-3/8"	12'	15'		MOUNT WITH SIGN 20
6	"1St Street" 15+75 LT	30"	30"		✓		O		BK			✓		6																		15'		MOUNT WITH SIGN 21
6	"1St Street" 18+10 RT	30"	30"		✓		O		BK			✓		6		✓														2-3/8"	12'	16'		MOUNT WITH SIGN 20
6	"1St Street" 18+10 RT	30"	30"		✓		O		BK			✓		6																		16'		MOUNT WITH SIGN 21
6	"1St Street" 18+32 LT	30"	30"		✓		O		BK			✓		6		✓														2-3/8"	12'	16'		MOUNT WITH SIGN 20
6	"1St Street" 18+32 LT	30"	30"		✓		O		BK			✓		6																		16'		MOUNT WITH SIGN 21
6	"1st Street" 18+88 RT	30"	30"		✓		O		BK			✓		6																		17'		MOUNT WITH SIGN 21
6	"1St Street" 21+35 RT	30"	30"		✓		O		BK			✓		6		✓														2-3/8"	12'	15'		MOUNT WITH SIGN 20
6	"1St Street" 21+35 RT	30"	30"		✓		O		BK			✓		6																		15'		MOUNT WITH SIGN 21
6	"1St Street" 21+58 LT	30"	30"		✓		O		BK			✓		6		✓														2-3/8"	12'	16'		MOUNT WITH SIGN 20
6	"1St Street" 21+58 LT	30"	30"		✓		O		BK			✓		6																		16'		MOUNT WITH SIGN 21
6	"1St Street" 25+34 RT	30"	30"		✓		O		BK			✓		6		✓														2-3/8"	12'	15'		
6	"1St Street" 25+34 RT	30"	30"		✓		O		BK			✓		6																		15'		
6	"1St Street" 25+57 LT	30"	30"		✓		O		BK			✓		6		✓														2-3/8"	12'	16'		MOUNT WITH SIGN 20
6	"1St Street" 25+57 LT	30"	30"		✓		O		BK			✓		6																		16'		MOUNT WITH SIGN 21
6	"1st Street" 29+60 LT	30"	30"		✓		O		BK			✓		6																		13'		MOUNT WITH SIGN 21
6	"1st Street" 32+38 RT	30"	30"		✓		O		BK			✓		6		✓														2-3/8"	12'	20'		MOUNT WITH SIGN 21
6	"1st Street" 32+38 RT	30"	30"		✓		O		BK			✓		6																		20'		MOUNT WITH SIGN 20
6	"1st Street" 32+38 RT	30"	30"		✓		O		BK			✓		6		✓														2-3/8"	12'	20'		MOUNT WITH SIGN 21
6	"1st Street" 32+38 RT	30"	30"		✓		O		BK			✓		6																		20'		MOUNT WITH SIGN 20
6	"1st Street" 33+20 LT	30"	30"		✓		O		BK			✓		6		✓														2-3/8"	12'	14'		MOUNT WITH SIGN 20
6	"1st Street" 33+20 LT	30"	30"		✓		O		BK			✓		6																		14'		MOUNT WITH SIGN 21
6	"Strand Street" 10+34 RT	30"	30"		✓		O		BK			✓		6		✓														2-3/8"	12'	22'		MOUNT WITH SIGN 20
6	"Strand Street" 10+34 RT	30"	30"		✓		O		BK			✓		6																		22'		MOUNT WITH SIGN 21
6	"Strand Street" 10+57 LT	30"	30"		✓		O		BK			✓		6		✓														2-3/8"	12'	16'		MOUNT WITH SIGN 20
6	"Strand Street" 10+57 LT	30"	30"		✓		O		BK			✓		6																		16'		MOUNT WITH SIGN 21
6	"Strand Street" 13+45 RT	30"	30"		✓		O		BK			✓		6		✓														2-3/8"	12'	17'		MOUNT WITH SIGN 20
6	"Strand Street" 13+45 RT	30"	30"		✓		O		BK			✓		6																		17'		MOUNT WITH SIGN 21
6	"Strand Street" 14+05 LT	30"	30"		✓		O		BK			✓		6		✓														2-3/8"	12'	16'		MOUNT WITH SIGN 20
6	"Strand Street" 14+05 LT	30"	30"		✓		O		BK			✓		6																		16'		MOUNT WITH SIGN 21
6	"Tualatin St" 12+26 RT	30"	30"		✓		O		BK			✓		6		✓														2-3/8"	12'	15'		MOUNT WITH SIGN 20
6	"Tualatin St" 12+26 RT	30"	30"		✓		O		BK			✓		6																		15'		MOUNT WITH SIGN 21
6	"Tualatin St" 12+56 LT	30"	30"		✓		O		BK			✓		6		✓														2-3/8"	12'	21'		MOUNT WITH SIGN 20
6	"Tualatin St" 12+56 LT	30"	30"		✓		O		BK			✓		6																		21'		MOUNT WITH SIGN 21
8	"Tualatin St" 11+84 RT	30"	30"		✓		O		BK			✓		8		✓														2-3/8"	12'	22'		
9	"Strand Street" 10+88 LT	30"	30"		✓		O		BK			✓		9		✓														2-3/8"	12'	33'		

1/
BK=BLACK
BL=BLUE
BR=BROWN
FY=FLUORESCENT YELLOW
G=GREEN
O=ORANGE
P=PURPLE
R=RED
RB=RED-BLUE
SW=SILVER-WHITE
W=WHITE
Y=YELLOW

2/
NOTE: L,C,R ARE LOCATIONS OF POSTS FACING THE SIGN.

L = LEFT POST
C = CENTER POST
R = RIGHT POST

3/
DISTANCE FROM EDGE OF PAVEMENT, FACE OF CURB, GUARDRAIL, OR BARRIER TO THE CENTERLINE OF FOOTING. FOR ADDITIONAL INFORMATION SEE STANDARD DRAWINGS TM600, TM602, AND TM635

4/
NOTE: THE LOCATIONS SHOWN ARE APPROXIMATE EXCEPT FOR SPEED ZONES, SCHOOL ZONES, OBJECT MARKERS AND MILEPOST MARKERS. EXACT LOCATIONS ARE TO BE DETERMINED BY THE ENGINEER

5/
MINIMUM DEPTH OF FOOTING FOR TRIANGULAR BASE BREAKAWAY AND MULTI-POST BREAKAWAY INSTALLATIONS IS FOR A 2' DIAMETER FOOTING. FOR ADDITIONAL INFORMATION SEE STANDARD DRAWINGS TM601 AND TM602.

City of St. Helens FOUNDED 1850

REGISTERED PROFESSIONAL ENGINEER 74348 OREGON JUNE 12, 2015 STEVEN J. BOICE EXPIRES: DEC. 31, 2023

90% DESIGN

DKS
720 SW Washington St, Suite 500
Portland, Oregon 97205
www.dksassociates.com

S. 1ST AND STRAND STREETS ROAD AND UTILITY EXTENSIONS

ST. HELENS, OREGON
SIGNING AND STRIPING PLANS

SIGNING DETAILS

TITLE

#	DATE	DESCRIPTION

REVISIONS

DATUM

RAS — DRAWN BY
SJB — CHECKED BY

90% DESIGN
STATUS

JANUARY 10, 2022
DATE

19823
PROJECT NUMBER

SS12

© 2021 OTAK, INC.

If this drawing is not 22" x 34", it has been reduced/enlarged. Scale accordingly.

Plotted: Jan 09, 2022 - 9:21am, George.Angelis X:\Projects\2021\21058-000 (St Helens 1st and Strand)\CAD\SS12.dwg Layout Name: SS12

SIGNING DETAILS

SIGN NO.	SIGN LOCATION 4/	SIGN DIMENSIONS WIDTH	SIGN DIMENSIONS HEIGHT	SUB-STRATE PLYWOOD	SUB-STRATE SHEET ALUMINUM	SUB-STRATE EXTRUDED ALUMINUM	COLOR 1/ BACK-GROUND ASTM TYPE III OR TYPE IV	COLOR 1/ BACK-GROUND ASTM TYPE IX	COLOR 1/ LEGEND ASTM TYPE III OR TYPE IV	COLOR 1/ LEGEND ASTM TYPE IX	COLOR 1/ LEGEND NON-REFLECTIVE	LEGEND TYPE PERMANENT	LEGEND TYPE DEMOUNTABLE	SIGN NO. 2/	TYPE OF SUPPORT: WOOD POST (ODOT TM670-671, TM676)	SINGLE PIPE POST (SCH 40)	PERF. STEEL SQUARE TUBE (ODOT TM671, TM676, TM681, TM687-689)	TRIANGULAR BASE BREAKAWAY (ODOT TM602)	MULTI-POST BREAKAWAY (ODOT TM220, TM600-601)	STAINLESS STEEL CLAMP (SSC) (TM677)	SIGNAL POLE MOUNT (ODOT TM680)	CROSSWALK CLOSURE BARRICADE (ODOT TM240)	VERTICAL SIGN MOUNT ON EXISTING STRUCTURE	EXISTING PIPE POST	MILEPOST MARKER POST	ADJUSTABLE SIGN MOUNT	MAST ARM SNS MOUNT	C 4 X 5.4	C 4 X 7.25	LENGTH (FT.)	POST SIZE (BASED ON ESTIMATED LENGTH)	POST LENGTH (MUST BE FIELD VERIFIED)	FOOTING LOCATION 3/	FOOTING MIN. DEPTH 5/	REMARKS
12	"1St Street" 16+11 RT	12"	18"		✓		SW		G			✓		12		✓															2-3/8"	12'	21'		
12	"1St Street" 17+73 LT	12"	18"		✓		SW		G			✓		12		✓															2-3/8"	12'	33'		
12	"1st Street" 18+57 LT	12"	18"		✓		SW		G			✓		12		✓															2-3/8"	12'	33'		
12	"1St Street" 18+84 LT	12"	18"		✓		SW		G			✓		12		✓															2-3/8"	12'	22'		
12	"1St Street" 21+01 LT	12"	18"		✓		SW		G			✓		12		✓															2-3/8"	12'	33'		
12	"1St Street" 21+70 RT	12"	18"		✓		SW		G			✓		12		✓															2-3/8"	12'	21'		
12	"1St Street" 22+89 RT	12"	18"		✓		SW		G			✓		12		✓															2-3/8"	12'	22'		
12	"1St Street" 25+79 RT	12"	18"		✓		SW		G			✓		12		✓															2-3/8"	12'	17'		
12	"1st Street" 29+88 RT	12"	18"		✓		SW		G			✓		12		✓															2-3/8"	12'	20'		
12	"1st Street" 32+43 LT	12"	18"		✓		SW		G			✓		12		✓															2-3/8"	12'	27'		
12	"1st Street" 35+33 LT	12"	18"		✓		SW		G			✓		12		✓															2-3/8"	12'	26'		
12	"Cowlitz St" 11+61 LT	12"	18"		✓		SW		G			✓		12		✓															2-3/8"	12'	25'		
12	"Cowlitz St" 12+85 LT	12"	18"		✓		SW		G			✓		12		✓															2-3/8"	12'	34'		
12	"Strand Street" 10+70 RT	12"	18"		✓		SW		G			✓		12		✓															2-3/8"	12'	31'		
12	"Strand Street" 13+09 LT	12"	18"		✓		SW		G			✓		12		✓															2-3/8"	12'	32'		
12	"Strand Street" 14+23 RT	12"	18"		✓		SW		G			✓		12		✓															2-3/8"	12'	31'		
12	"Strand Street" 16+41 LT	12"	18"		✓		SW		G			✓		12		✓															2-3/8"	12'	13'		
12	"Strand Street" 17+42 RT	12"	18"		✓		SW		G			✓		12		✓															2-3/8"	12'	30'		
12	"Strand Street" 19+30 LT	12"	18"		✓		SW		G			✓		12																			32'		
12	"Street A" 10+57 RT	12"	18"		✓		SW		G			✓		12		✓															2-3/8"	12'	33'		
12	"Street A" 12+16 LT	12"	18"		✓		SW		G			✓		12		✓															2-3/8"	12'	29'		
12	"Tualatin St" 10+54 RT	12"	18"		✓		SW		G			✓		12		✓															2-3/8"	12'	20'		
12	"Tualatin St" 12+10 LT	12"	18"		✓		SW		G			✓		12		✓															2-3/8"	12'	33'		
13	"1St Street" 15+99 LT	12"	18"		✓		SW		G			✓		13		✓															2-3/8"	12'	33'		
13	"1St Street" 17+99 RT	12"	18"		✓		SW		G			✓		13		✓															2-3/8"	12'	17'		
13	"1St Street" 18+56 LT	12"	18"		✓		SW		G			✓		13		✓															2-3/8"	12'	33'		
13	"1st Street" 18+64 RT	12"	18"		✓		SW		G			✓		13		✓															2-3/8"	12'	21'		
13	"1St Street" 21+15 RT	12"	18"		✓		SW		G			✓		13		✓															2-3/8"	12'	21'		
13	"1St Street" 21+73 LT	12"	18"		✓		SW		G			✓		13		✓															2-3/8"	12'	32'		
13	"1St Street" 24+97 LT	12"	18"		✓		SW		G			✓		13		✓															2-3/8"	12'	33'		
13	"1St Street" 25+23 RT	12"	18"		✓		SW		G			✓		13		✓															2-3/8"	12'	17'		
13	"1St Street" 25+76 LT	12"	18"		✓		SW		G			✓		13		✓															2-3/8"	12'	33'		
13	"1st Street" 29+73 LT	12"	18"		✓		SW		G			✓		13		✓															2-3/8"	12'	33'		
13	"1st Street" 32+42 RT	12"	18"		✓		SW		G			✓		13		✓															2-3/8"	12'	18'		
13	"Cowlitz St" 12+91 LT	12"	18"		✓		SW		G			✓		13		✓															2-3/8"	12'	38'		
13	"Strand Street" 10+60 LT	12"	18"		✓		SW		G			✓		13		✓															2-3/8"	12'	33'		
13	"Strand Street" 13+12 LT	12"	18"		✓		SW		G			✓		13		✓															2-3/8"	12'	30'		
13	"Strand Street" 14+17 LT	12"	18"		✓		SW		G			✓		13		✓															2-3/8"	12'	32'		
13	"Strand Street" 16+43 RT	12"	18"		✓		SW		G			✓		13																			16'		
13	"Strand Street" 17+42 LT	12"	18"		✓		SW		G			✓		13		✓															2-3/8"	12'	31'		
13	"Street A" 10+60 LT	12"	18"		✓		SW		G			✓		13		✓															2-3/8"	12'	22'		
13	"Street A" 12+22 RT	12"	18"		✓		SW		G			✓		13		✓															2-3/8"	12'	33'		
13	"Tualatin St" 10+54 LT	12"	18"		✓		SW		G			✓		13		✓															2-3/8"	12'	34'		
13	"Tualatin St" 12+07 RT	12"	18"		✓		SW		G			✓		13		✓															2-3/8"	12'	19'		

1/

BK=BLACK
BL=BLUE
BR=BROWN
FY=FLUORESCENT YELLOW
G=GREEN
O=ORANGE
P=PURPLE
R=RED
RB=RED-BLUE
SW=SILVER-WHITE
W=WHITE
Y=YELLOW

2/

NOTE: L,C,R ARE LOCATIONS OF POSTS FACING THE SIGN.

L = LEFT POST
C = CENTER POST
R = RIGHT POST

3/

DISTANCE FROM EDGE OF PAVEMENT, FACE OF CURB, GUARDRAIL, OR BARRIER TO THE CENTERLINE OF FOOTING. FOR ADDITIONAL INFORMATION SEE STANDARD DRAWINGS TM600, TM602, AND TM635

4/

NOTE: THE LOCATIONS SHOWN ARE APPROXIMATE EXCEPT FOR SPEED ZONES, SCHOOL ZONES, OBJECT MARKERS AND MILEPOST MARKERS. EXACT LOCATIONS ARE TO BE DETERMINED BY THE ENGINEER

5/

MINIMUM DEPTH OF FOOTING FOR TRIANGULAR BASE BREAKAWAY AND MULTI-POST BREAKAWAY INSTALLATIONS IS FOR A 2' DIAMETER FOOTING. FOR ADDITIONAL INFORMATION SEE STANDARD DRAWINGS TM601 AND TM602.

City of St. Helens FOUNDED 1850

REGISTERED PROFESSIONAL ENGINEER 74,348 OREGON JUNE 12, 2013 STEVEN J. BOICE
90% DESIGN
EXPIRES: DEC. 31, 2023

DKS
720 SW Washington St, Suite 500
Portland, Oregon 97205
www.dksassociates.com

S. 1ST AND STRAND STREETS ROAD AND UTILITY EXTENSIONS
ST. HELENS, OREGON
SIGNING AND STRIPING PLANS

SIGNING DETAILS

TITLE

#	DATE	DESCRIPTION

REVISIONS

DATUM

RAS — DRAWN BY
SJB — CHECKED BY

90% DESIGN — STATUS

JANUARY 10, 2022 — DATE

19823 — PROJECT NUMBER

SS13

© 2021 OTAK, INC.

If this drawing is not 22" x 34", it has been reduced/enlarged. Scale accordingly.

Plotted: Jan 09, 2022 - 9:21pm George Argeris X:\Projects\2021\P21058-000 (St Helens 1st and Strand)\CAD\SS13.dwg Layout Name: SS11

SIGNING DETAILS

SIGN NO.	SIGN LOCATION 4/	SIGN DIMENSIONS WIDTH	SIGN DIMENSIONS HEIGHT	SUB-STRATE PLYWOOD	SUB-STRATE SHEET ALUMINUM	SUB-STRATE EXTRUDED ALUMINUM	COLOR 1/ BACK-GROUND ASTM TYPE III OR TYPE IV	COLOR 1/ BACK-GROUND ASTM TYPE IX	COLOR 1/ LEGEND ASTM TYPE III OR TYPE IV	COLOR 1/ LEGEND ASTM TYPE IX	COLOR 1/ LEGEND NON-REFLECTIVE	LEGEND TYPE PERMANENT	LEGEND TYPE DEMOUNTABLE	SIGN NO. 2/	TYPE OF SUPPORT WOOD POST (ODOT TM670-671, TM676)	SINGLE PIPE POST (SCH 40)	PERF. STEEL SQUARE TUBE (ODOT TM671, TM676, TM681, TM687-689)	TRIANGULAR BASE BREAKAWAY (ODOT TM602)	MULTI-POST BREAKAWAY (ODOT TM220, TM600-601)	STAINLESS STEEL CLAMP (SSC) (TM677)	SIGNAL POLE MOUNT (ODOT TM680)	CROSSWALK CLOSURE BARRICADE (ODOT TM240)	VERTICAL SIGN MOUNT ON EXISTING STRUCTURE	EXISTING PIPE POST	MILEPOST MARKER POST	ADJUSTABLE SIGN MOUNT	MAST ARM SNS MOUNT	C 4 X 5.4	C 4 X 7.25	LENGTH H (FT.)	POST SIZE (BASED ON ESTIMATED LENGTH)	POST LENGTH H (MUST BE FIELD VERIFIED)	FOOTING LOCATION 3/	FOOTING MIN. DEPTH 5/	REMARKS
17	"Cowlitz St" 9+04 RT	30"	30"		✓		O		BK			✓		17		✓															2-3/8"	12'	15'		
20	"1St Street" 15+57 RT	24"	12"		✓		O		BK			✓		20																			15'		MOUNT WITH SIGN 6
20	"1St Street" 15+75 LT	24"	12"		✓		O		BK			✓		20																			15'		MOUNT WITH SIGN 6
20	"1St Street" 18+10 RT	24"	12"		✓		O		BK			✓		20																			16'		MOUNT WITH SIGN 6
20	"1St Street" 18+32 LT	24"	12"		✓		O		BK			✓		20																			16'		MOUNT WITH SIGN 6
20	"1St Street" 21+35 RT	24"	12"		✓		O		BK			✓		20																			15'		MOUNT WITH SIGN 6
20	"1St Street" 21+58 LT	24"	12"		✓		O		BK			✓		20																			16'		MOUNT WITH SIGN 6
20	"1St Street" 25+34 RT	24"	12"		✓		O		BK			✓		20																			15'		
20	"1St Street" 25+57 LT	24"	12"		✓		O		BK			✓		20																			16'		MOUNT WITH SIGN 6
20	"1st Street" 32+38 RT	24"	12"		✓		O		BK			✓		20																			20'		MOUNT WITH SIGN 6
20	"1st Street" 33+20 LT	24"	12"		✓		O		BK			✓		20																			14'		MOUNT WITH SIGN 6
20	"Strand Street" 10+34 RT	24"	12"		✓		O		BK			✓		20																			22'		MOUNT WITH SIGN 6
20	"Strand Street" 10+57 LT	24"	12"		✓		O		BK			✓		20																			16'		MOUNT WITH SIGN 6
20	"Strand Street" 13+45 RT	24"	12"		✓		O		BK			✓		20																			17'		MOUNT WITH SIGN 6
20	"Strand Street" 14+05 LT	24"	12"		✓		O		BK			✓		20																			16'		MOUNT WITH SIGN 6
20	"Tualatin St" 12+26 RT	24"	12"		✓		O		BK			✓		20																			15'		MOUNT WITH SIGN 6
20	"Tualatin St" 12+56 LT	24"	12"		✓		O		BK			✓		20																			21'		MOUNT WITH SIGN 6
21	"1St Street" 15+57 RT	24"	12"		✓		O		BK			✓		21																			15'		MOUNT WITH SIGN 6
21	"1St Street" 15+75 LT	24"	12"		✓		O		BK			✓		21																			15'		MOUNT WITH SIGN 6
21	"1St Street" 18+10 RT	24"	12"		✓		O		BK			✓		21																			16'		MOUNT WITH SIGN 6
21	"1St Street" 18+32 LT	24"	12"		✓		O		BK			✓		21																			16'		MOUNT WITH SIGN 6
21	"1st Street" 18+88 RT	24"	12"		✓		O		BK			✓		21																			17'		MOUNT WITH SIGN 6
21	"1st Street" 21+35 RT	24"	12"		✓		O		BK			✓		21																			15'		MOUNT WITH SIGN 6
21	"1St Street" 21+58 LT	24"	12"		✓		O		BK			✓		21																			16'		MOUNT WITH SIGN 6
21	"1St Street" 25+34 RT	24"	12"		✓		O		BK			✓		21																			15'		
21	"1St Street" 25+57 LT	24"	12"		✓		O		BK			✓		21																			16'		MOUNT WITH SIGN 6
21	"1st Street" 29+60 LT	24"	12"		✓		O		BK			✓		21																			13'		MOUNT WITH SIGN 6
21	"1st Street" 32+38 RT	24"	12"		✓		O		BK			✓		21																			20'		MOUNT WITH SIGN 6
21	"1st Street" 33+20 LT	24"	12"		✓		O		BK			✓		21																			14'		MOUNT WITH SIGN 6
21	"Strand Street" 10+34 RT	24"	12"		✓		O		BK			✓		21																			22'		MOUNT WITH SIGN 6
21	"Strand Street" 10+57 LT	24"	12"		✓		O		BK			✓		21																			16'		MOUNT WITH SIGN 6
21	"Strand Street" 13+45 RT	24"	12"		✓		O		BK			✓		21																			17'		MOUNT WITH SIGN 6
21	"Strand Street" 14+05 LT	24"	12"		✓		O		BK			✓		21																			16'		MOUNT WITH SIGN 6
21	"Tualatin St" 12+26 RT	24"	12"		✓		O		BK			✓		21																			15'		MOUNT WITH SIGN 6
21	"Tualatin St" 12+56 LT	24"	12"		✓		O		BK			✓		21																			21'		MOUNT WITH SIGN 6
22	"1st Street" 18+88 RT	18"	6"		✓		R		SW			✓		22																			17'		MOUNT WITH SIGNS 5
22	"1st Street" 29+60 LT	18"	6"		✓		R		SW			✓		22																			13'		MOUNT WITH SIGNS 5
22	"1st Street" 35+50 RT	18"	6"		✓		R		SW			✓		22																			14'		MOUNT WITH SIGN 5
22	"1st Street" 36+43 LT	18"	6"		✓		R		SW			✓		22																			14'		MOUNT WITH SIGN 5 & 31
22	"Cowlitz St" 8+98 RT	18"	6"		✓		R		SW			✓		22																			14'		MOUNT WITH SIGN 5
22	"Cowlitz St" 9+85 LT	18"	6"		✓		R		SW			✓		22																			14'		MOUNT WITH SIGN 5

1/
BK=BLACK
BL=BLUE
BR=BROWN
FY=FLUORESCENT YELLOW
G=GREEN
O=ORANGE
P=PURPLE
R=RED
RB=RED-BLUE
SW=SILVER-WHITE
W=WHITE
Y=YELLOW

2/
NOTE: L,C,R ARE LOCATIONS OF POSTS FACING THE SIGN.

L = LEFT POST
C = CENTER POST
R = RIGHT POST

3/
DISTANCE FROM EDGE OF PAVEMENT, FACE OF CURB, GUARDRAIL, OR BARRIER TO THE CENTERLINE OF FOOTING. FOR ADDITIONAL INFORMATION SEE STANDARD DRAWINGS TM600, TM602, AND TM635

4/
NOTE: THE LOCATIONS SHOWN ARE APPROXIMATE EXCEPT FOR SPEED ZONES, SCHOOL ZONES, OBJECT MARKERS AND MILEPOST MARKERS. EXACT LOCATIONS ARE TO BE DETERMINED BY THE ENGINEER

5/
MINIMUM DEPTH OF FOOTING FOR TRIANGULAR BASE BREAKAWAY AND MULTI-POST BREAKAWAY INSTALLATIONS IS FOR A 2' DIAMETER FOOTING. FOR ADDITIONAL INFORMATION SEE STANDARD DRAWINGS TM601 AND TM602.

REGISTERED PROFESSIONAL ENGINEER 74,348 OREGON JUNE 12, 2013 STEVEN J. BOICE
EXPIRES: DEC. 31, 2023
90% DESIGN

DKS
720 SW Washington St, Suite 500
Portland, Oregon 97205
www.dksassociates.com

S. 1ST AND STRAND STREETS ROAD AND UTILITY EXTENSIONS
ST. HELENS, OREGON
SIGNING AND STRIPING PLANS
SIGNING DETAILS
TITLE

#	DATE	DESCRIPTION

REVISIONS

DATUM

RAS SJB
DRAWN BY CHECKED BY

90% DESIGN
STATUS

JANUARY 10, 2022
DATE

19823
PROJECT NUMBER

SS14

© 2021 OTAK, INC.
If this drawing is not 22" x 34", it has been reduced/enlarged. Scale accordingly.
Plotted: Jan 09, 2022 - 9:20pm George Argenis X:\Projects\2021\P21058-000 (St Helens 1st and Strand)\CAD\SS14.dwg Layout Name: SS11

SIGNING DETAILS

SIGN NO.	SIGN LOCATION 4/	SIGN DIMENSIONS WIDTH	SIGN DIMENSIONS HEIGHT	SUB-STRATE PLYWOOD	SUB-STRATE SHEET ALUMINUM	SUB-STRATE EXTRUDED ALUMINUM	COLOR 1/ BACK-GROUND ASTM TYPE III OR TYPE IV	COLOR BACK-GROUND ASTM TYPE IX	COLOR LEGEND ASTM TYPE III OR TYPE IV	COLOR LEGEND ASTM TYPE IX	NON-REFLECTIVE	LEGEND TYPE PERMANENT	LEGEND TYPE DEMOUNTABLE	SIGN NO. 2/	TYPE OF SUPPORT WOOD POST (ODOT TM670-671, TM676)	SINGLE PIPE POST (SCH 40)	PERF. STEEL SQUARE TUBE (ODOT TM671, TM676, TM681, TM687-689)	TRIANGULAR BASE BREAKAWAY (ODOT TM602)	MULTI-POST BREAKAWAY (ODOT TM220, TM600-601)	STAINLESS STEEL CLAMP (SSC) (TM677)	SIGNAL POLE MOUNT (ODOT TM680)	CROSSWALK CLOSURE BARRICADE (ODOT TM240)	VERTICAL SIGN MOUNT ON EXISTING STRUCTURE	EXISTING PIPE POST	MILEPOST MARKER POST	ADJUSTABLE SIGN MOUNT	MAST ARM SNS MOUNT	C 4 X 5.4	C 4 X 7.25	LENGTH (FT.)	POST SIZE (BASED ON ESTIMATED LENGTH)	POST LENGTH (MUST BE FIELD VERIFIED)	FOOTING LOCATION 3/	FOOTING MIN DEPTH 5/	REMARKS
23	"1St Street" 16+86 LT	12"	18"		✓		SW		G			✓		23		✓															2-3/8"	12'	33'		
23	"1St Street" 17+20 RT	12"	18"		✓		SW		G			✓		23		✓															2-3/8"	12'	21'		
23	"1St Street" 20+08 RT	12"	18"		✓		SW		G			✓		23		✓															2-3/8"	12'	21'		
23	"1St Street" 20+17 LT	12"	18"		✓		SW		G			✓		23		✓															2-3/8"	12'	33'		
23	"1St Street" 23+38 LT	12"	18"		✓		SW		G			✓		23		✓															2-3/8"	12'	34'		
23	"1St Street" 24+02 RT	12"	18"		✓		SW		G			✓		23		✓															2-3/8"	12'	21'		
23	"1St Street" 26+85 LT	12"	18"		✓		SW		G			✓		23		✓															2-3/8"	12'	33'		
23	"1St Street" 27+38 RT	12"	18"		✓		SW		G			✓		23		✓															2-3/8"	12'	21'		
23	"1st Street" 30+09 RT	12"	18"		✓		SW		G			✓		23		✓															2-3/8"	12'	21'		
23	"1st Street" 30+30 LT	12"	18"		✓		SW		G			✓		23		✓															2-3/8"	12'	30'		
23	"Cowlitz St" 13+58 LT	12"	18"		✓		SW		G			✓		23		✓															2-3/8"	12'	27'		
23	"Strand Street" 11+87 RT	12"	18"		✓		SW		G			✓		23		✓															2-3/8"	12'	30'		
23	"Strand Street" 12+05 LT	12"	18"		✓		SW		G			✓		23		✓															2-3/8"	12'	32'		
23	"Strand Street" 16+40 RT	12"	18"		✓		SW		G			✓		23		✓															2-3/8"	12'	31'		
23	"Strand Street" 18+35 RT	12"	18"		✓		SW		G			✓		23		✓															2-3/8"	12'	31'		
24	"Strand Street" 16+12 RT	12"	18"		✓		SW		G			✓		24		✓															2-3/8"	12'	31'		
24	"Strand Street" 16+30 RT	12"	18"		✓		SW		G			✓		24		✓															2-3/8"	12'	31'		
24	"Strand Street" 19+07 RT	12"	18"		✓		SW		G			✓		24		✓															2-3/8"	12'	30'		
24	"Strand Street" 19+09 LT	12"	18"		✓		SW		G			✓		24		✓															2-3/8"	12'	32'		
24	"Strand Street" 19+28 RT	12"	18"		✓		SW		G			✓		24		✓															2-3/8"	12'	30'		
24	"Strand Street" 19+30 LT	12"	18"		✓		SW		G			✓		24		✓															2-3/8"	12'	32'		
25	"Strand Street" 20+19 RT	30"	30"		✓		SW		SW			✓		25		✓															2-3/8"	12'	28'		
27	"Strand Street" 20+12 RT	30"	36"		✓		SW		BK			✓		27																			17'		
28	"Strand Street" 20+19 RT	36"	12"		✓		BK		BK			✓		28																			18'		
29	"Strand Street" 18+88 LT	12"	18"		✓		SW		G			✓		29		✓															2-3/8"	12'	32'		
29	"Strand Street" 18+98 LT	12"	18"		✓		SW		G			✓		29		✓															2-3/8"	12'	32'		
30	"1St Street" 19+12 LT	15"	16"		✓		SW		R			✓		30		✓															2-3/8"	12'	33'		
30	"1St Street" 19+22 LT	15"	16"		✓		SW		R			✓		30		✓															2-3/8"	12'	33'		
30	"1St Street" 19+32 LT	15"	16"		✓		SW		R			✓		30		✓															2-3/8"	12'	33'		
30	"1St Street" 19+42 LT	15"	16"		✓		SW		R			✓		30		✓															2-3/8"	12'	33'		
31	"1st Street" 36+43 LT	12"	9"		✓		BL		SW			✓		31																			14'		MOUNT WITH SIGN 5 & 22

1/
BK=BLACK
BL=BLUE
BR=BROWN
FY=FLUORESCENT YELLOW
G=GREEN
O=ORANGE
P=PURPLE
R=RED
RB=RED-BLUE
SW=SILVER WHITE
W=WHITE
Y=YELLOW

2/
NOTE: L.C.R ARE LOCATIONS OF POSTS FACING THE SIGN.

L = LEFT POST
C = CENTER POST
R = RIGHT POST

3/
DISTANCE FROM EDGE OF PAVEMENT, FACE OF CURB, GUARDRAIL, OR BARRIER TO THE CENTERLINE OF FOOTING. FOR ADDITIONAL INFORMATION SEE STANDARD DRAWINGS TM600, TM602, AND TM635

4/
NOTE: THE LOCATIONS SHOWN ARE APPROXIMATE EXCEPT FOR SPEED ZONES, SCHOOL ZONES, OBJECT MARKERS AND MILEPOST MARKERS. EXACT LOCATIONS ARE TO BE DETERMINED BY THE ENGINEER

5/
MINIMUM DEPTH OF FOOTING FOR TRIANGULAR BASE BREAKAWAY AND MULTI-POST BREAKAWAY INSTALLATIONS IS FOR A 2' DIAMETER FOOTING. FOR ADDITIONAL INFORMATION SEE STANDARD DRAWINGS TM601 AND TM602.

City of St. Helens
FOUNDED 1850

REGISTERED PROFESSIONAL ENGINEER
74348
OREGON
JUNE 12, 2013
STEVEN J. BOICE
EXPIRES: DEC. 31, 2023
90% DESIGN

DKS
720 SW Washington St, Suite 500
Portland, Oregon 97205
www.dksassociates.com

S. 1ST AND STRAND STREETS ROAD AND UTILITY EXTENSIONS
ST. HELENS, OREGON
SIGNING AND STRIPING PLANS
SIGNING DETAILS
TITLE

#	DATE	DESCRIPTION

REVISIONS

DATUM

RAS — DRAWN BY
SJB — CHECKED BY

90% DESIGN — STATUS

JANUARY 10, 2022 — DATE

19823 — PROJECT NUMBER

SS15

© 2021 OTAK, INC.
If this drawing is not 22" x 34", it has been reduced/enlarged. Scale accordingly.
Plotted: Jan 09, 2022 - 9:20pm George Angelis X:\Projects\2021\P21058-000 (St Helens 1st and Strand)\CAD\SS15.dwg Layout Name: SS11

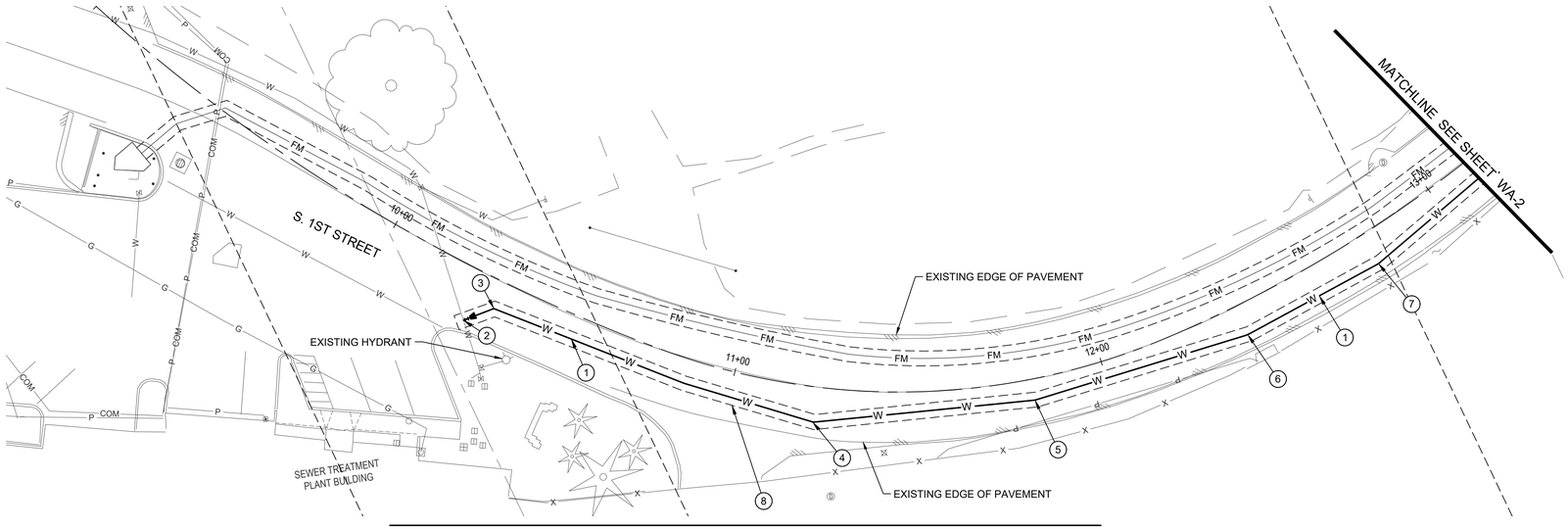

S. 1ST STREET STA 9+25 TO 13+25

0 20 40
SCALE IN FEET

WATER CONSTRUCTION KEY NOTES

1. INSTL NEW 8" DI CL-52, ALL JOINTS TO BE MECHANICALLY RESTRAINED
2. STA 10+30, 14.8' RT
   VALVE ASSY, HOT TAP EXISTING MAIN
   1 ~ 6" HOT TAP SLEEVE
   1 ~ 6" GTV, FLG x MJ
   1 ~ 8" x 6" RDCR MJ
3. STA 10+35, 7.7' RT
   INSTL 8" 45° BEND, ROTATE AS NEEDED FOR VERT DEFLECTION
4. STA 11+23, 9.5' RT
   INSTL 8" 22.5° BEND, ROTATE AS NEEDED FOR VERT DEFLECTION
5. STA 11+90, 5.7' RT
   INSTL 8" 11.25° BEND, ROTATE AS NEEDED FOR VERT DEFLECTION
6. STA 12+38', 8.1' RT
   INSTL 8" 11.25° BEND, ROTATE AS NEEDED FOR VERT DEFLECTION
7. STA 12+77', 9.1' RT
   INSTL 8" 11.25° BEND, ROTATE AS NEEDED FOR VERT DEFLECTION
8. TRENCH REPAIR PER CITY STANDARD DETAIL 300.

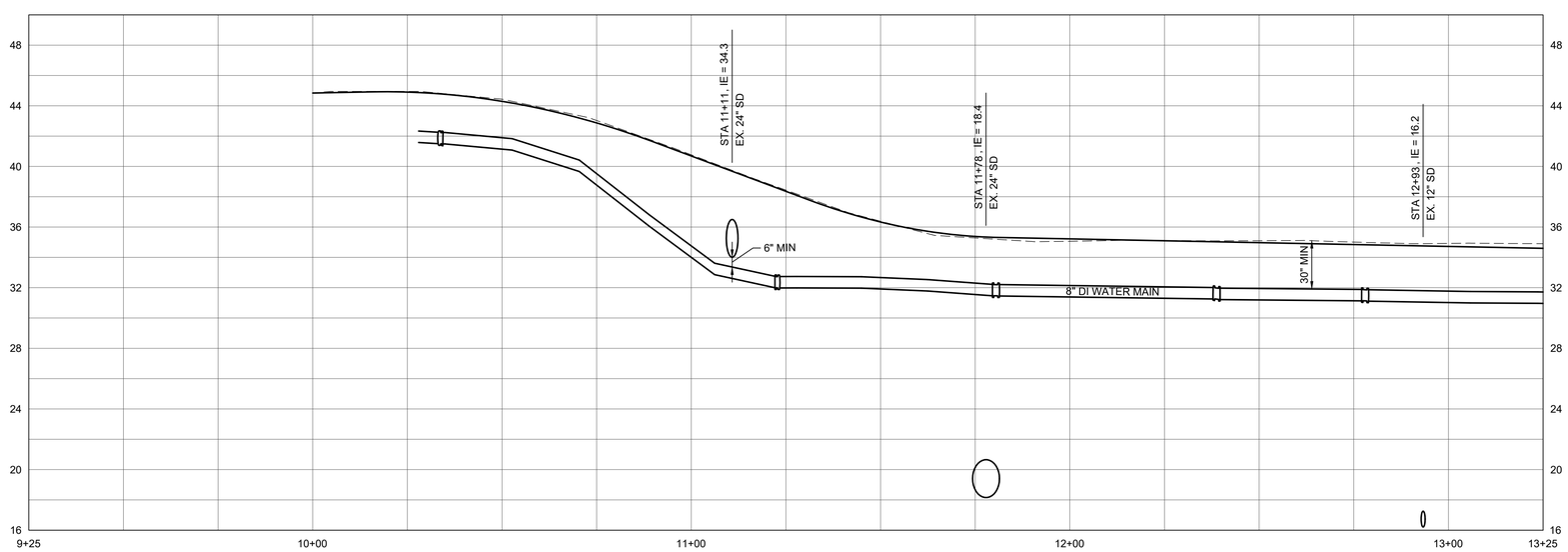

S. 1ST STREET STA 9+25 TO 13+25

HORZ 0 20 40
VERT 0 5 10
SCALE IN FEET

PRELIMINARY

LEEWAY engineering solutions

S. 1ST AND STRAND STREETS ROAD AND UTILITY EXTENSIONS
ST. HELENS, OREGON
WATER PLAN & PROFILE
S. 1ST STREET STA 9+25 TO 13+25

TITLE

.	DATE	DESCRIPTION

REVISIONS

DATUM

OTAK CAD — KJB
DRAWN BY — CHECKED BY

90% DESIGN
STATUS

JANUARY 10, 2022
DATE

19823
PROJECT NUMBER

WA-1

© 2021 OTAK, INC.

If this drawing is not 22" x 34", it has been reduced/enlarged. Scale accordingly.

Plotted: Jan 10, 2022 - 2:15pm Nathan G:\Shared drives\Gravity\Projects\21054_1st and Strand Utility Improvements\500 CAD\501 Plan Sheets\21054_W PAP SHEETS.dwg Layout Name: WA-1 S. 1ST STREET STA 9+25 TO 13+25

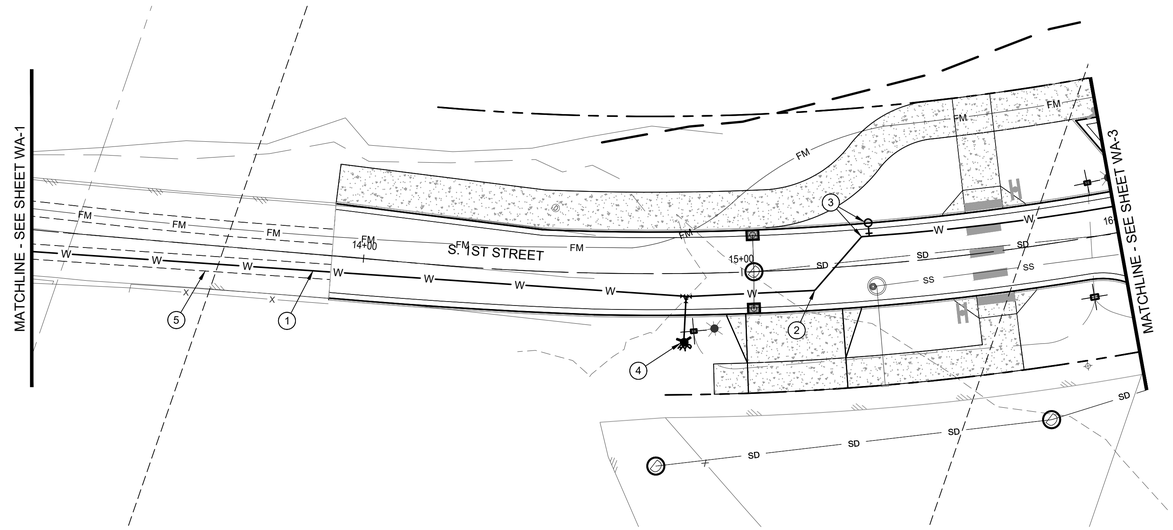

S. 1ST STREET STA 13+25 TO 16+00

0 20 40
SCALE IN FEET

WATER CONSTRUCTION KEY NOTES

1. INSTL NEW 8" DI CL-52, ALL JOINTS TO BE MECHANICALLY RESTRAINED
2. STA 15+19, 5.6' RT
   INSTL 8" 45° BEND, ROTATE AS NEEDED FOR VERT DEFLECTION
3. STA 15+33, 7.6' LT
   INSTL 8" 45° BEND, ROTATE AS NEEDED FOR VERT DEFLECTION
   INSTL PERMANENT 2" BLOW OFF ASSY PER STD DWG 420
4. STA 14+90, 18.5 RT
   INSTL FH ASSY, SEE ODOT STD DWG RD254
   1 ~ 8" x 6" TEE, MJ x FLG
   1 ~ 6" GTV, FLG x MJ
   12' ~ 6" DI WATER LINE
   SET HYDRANTS A MIN OF 2' FROM FOC OR EP
5. TRENCH REPAIR PER CITY STANDARD DETAIL 300

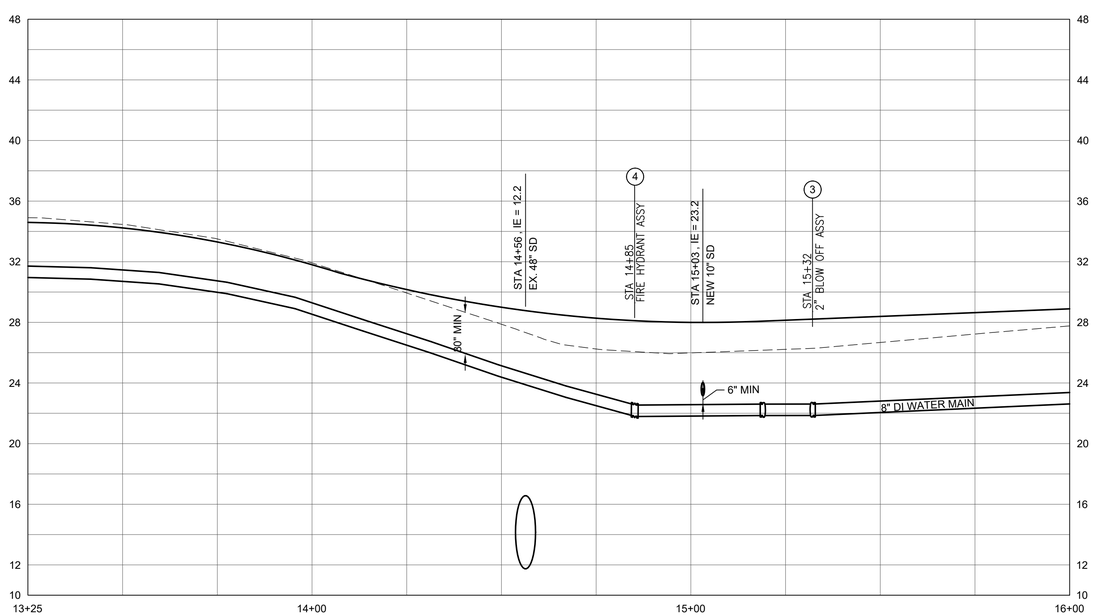

S. 1ST STREET STA 13+25 TO 16+00

HORZ 0 20 40
VERT 0 5 10
SCALE IN FEET

PRELIMINARY

LEEWAY engineering solutions

S. 1ST AND STRAND STREETS ROAD AND UTILITY EXTENSIONS

ST. HELENS, OREGON
WATER PLAN & PROFILE

S. 1ST STREET STA 13+25 TO 16+00

TITLE

#	DATE	DESCRIPTION

REVISIONS

DATUM

OTAK CAD — KJB
DRAWN BY — CHECKED BY

90% DESIGN
STATUS

JANUARY 10, 2022
DATE

19823
PROJECT NUMBER

WA-2

© 2021 OTAK, INC.

If this drawing is not 22" x 34", it has been reduced/enlarged. Scale accordingly.

Plotted: Jan 10, 2022 - 2:16pm Nathan G:\Shared drives\Grading\Projects\21054_1st and Strand Utility Improvements\500 CAD\501 Plan Sheets\21054 W P&P SHEETS.dwg Layout Name: WA-2 S. 1ST STREET STA 13+25 TO 16+00

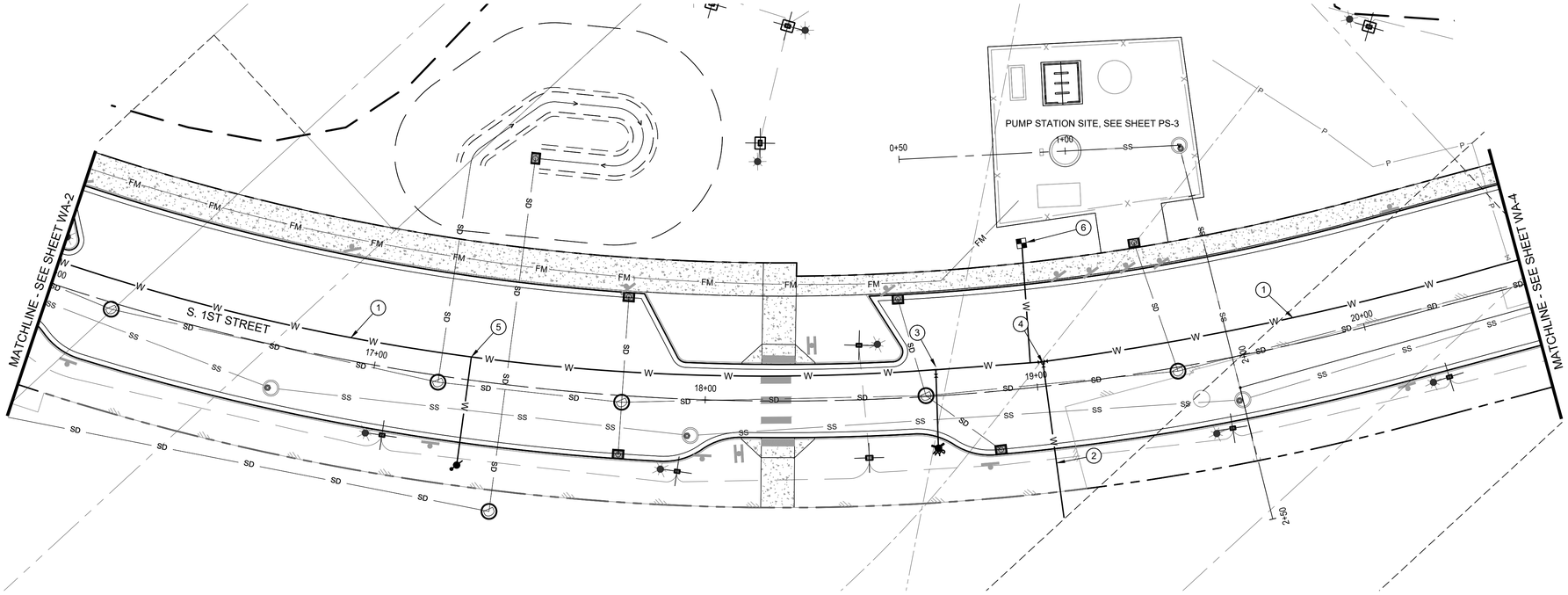

S. 1ST STREET STA 16+00 TO 20+50

0 20 40
SCALE IN FEET

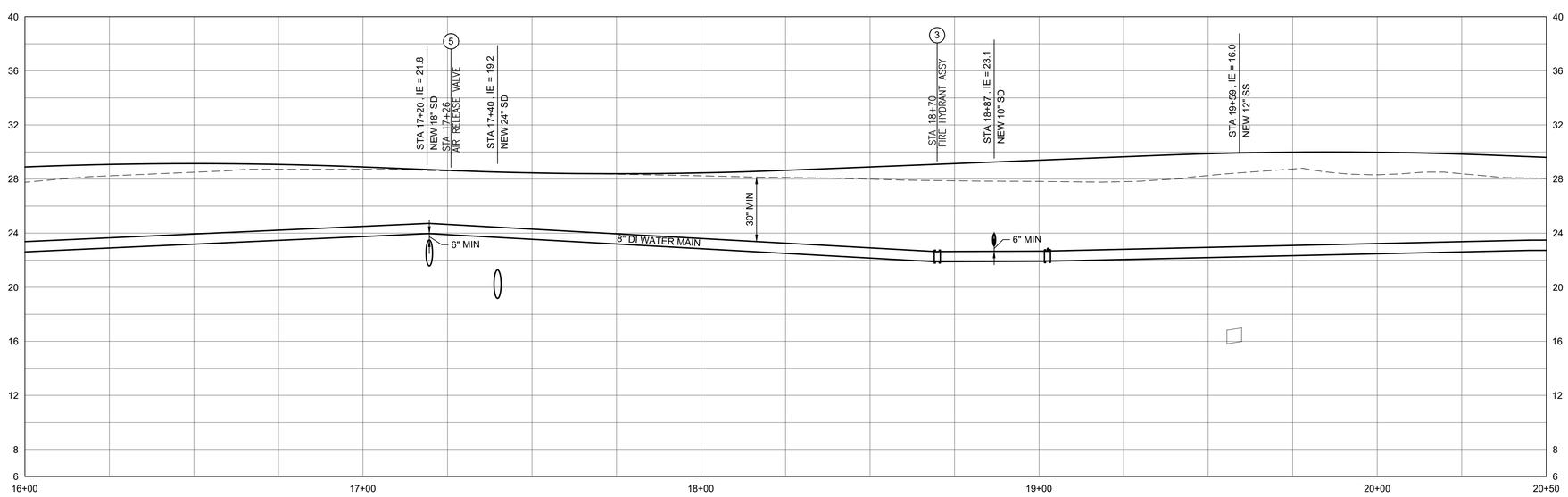

S. 1ST STREET STA 16+00 TO 20+50

HORZ 0 20 40
VERT 0 5 10
SCALE IN FEET

WATER CONSTRUCTION KEY NOTES

1. INSTL NEW 8" DI CL-52, ALL JOINTS TO BE MECHANICALLY RESTRAINED
2. INSTL NEW 6" DI PIPE
3. STA 18+68, 15.8' RT
   INSTL FH ASSY, SEE ODOT STD DWG RD254
   1 ~ 8" x 6"TEE, MJ x FLG
   1 ~ 6" GTV, FLG x MJ
   6" DI WATER LINE - 23.0'
   SET HYDRANTS A MIN OF 2' FROM FOC OR EP
4. STA 19+03, 7.0' LT
   INSTL 8" WATER LINE
   1 ~ 8" x 6" TEE, MJ x FLG
   1 ~ 6" GTV, FLG x MJ
   2 ~ 8" GTV, FLG x MJ
   6" DI WATER LINE - 46.8'
5. STA 17+30, 6.6' LT
   INSTL AIR RELEASE VALVE PER STD DWG 415
6. STA 18.95, 35' LT
   INSTL STD 1" WS, NEW WM BOX, APPROX 35 FT LENGTH, SEE STD DWG 405 SINGLE WATER SERVICE INSTALLATION

City of St. Helens
FOUNDED 1850

PRELIMINARY

LEEWAY
engineering solutions

S. 1ST AND STRAND STREETS ROAD AND UTILITY EXTENSIONS

ST. HELENS, OREGON
WATER PLAN & PROFILE

S. 1ST STREET STA 16+00 TO 20+50

TITLE

#	DATE	DESCRIPTION

REVISIONS

DATUM

OTAK CAD — KJB
DRAWN BY — CHECKED BY

90% DESIGN
STATUS

JANUARY 10, 2022
DATE

19823
PROJECT NUMBER

WA-3

© 2021 OTAK, INC.

If this drawing is not 22" x 34", it has been reduced/enlarged. Scale accordingly.

Plotted: Jan 10, 2022 - 2:16pm Nathan G:\Shared drives\Grading\Projects\21054_1st and Strand Utility Improvements\500-CAD\50.1 Plan Sheets\21054 W P&P SHEETS.dwg Layout Name: WA-3 S. 1ST STREET STA 16+00 TO 20+50

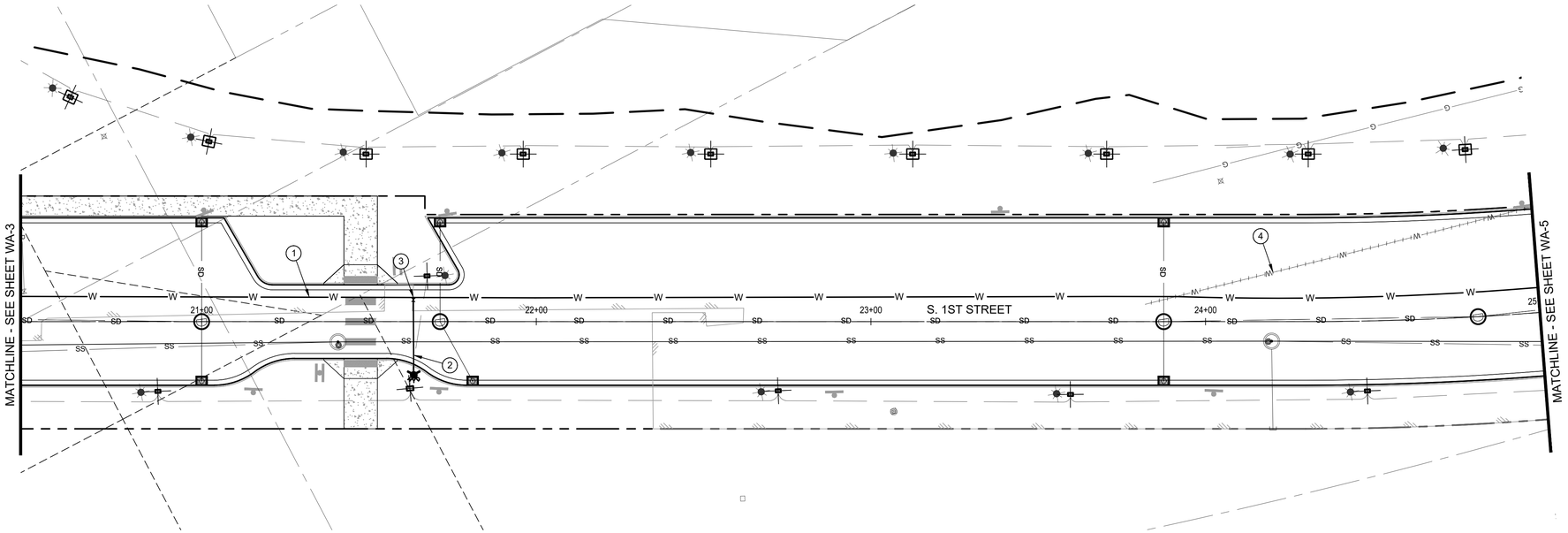

S. 1ST STREET STA 20+50 TO 25+00

0 20 40
SCALE IN FEET

WATER CONSTRUCTION KEY NOTES

1. INSTL NEW 8" DI CL-52, ALL JOINTS TO BE MECHANICALLY RESTRAINED
2. INSTL NEW 6" DI
3. STA 21+64, 19.0' RT
   INSTL FH ASSY, SEE ODOT STD DWG RD254
   1 ~ 8" x 6"TEE, MJ x FLG
   1 ~ 6" GTV, FLG x MJ
   6" DI WATER LINE - 22.0'
   SET HYDRANTS A MIN OF 2' FROM FOC OR EP
4. ABANDON EXISTING PIPE

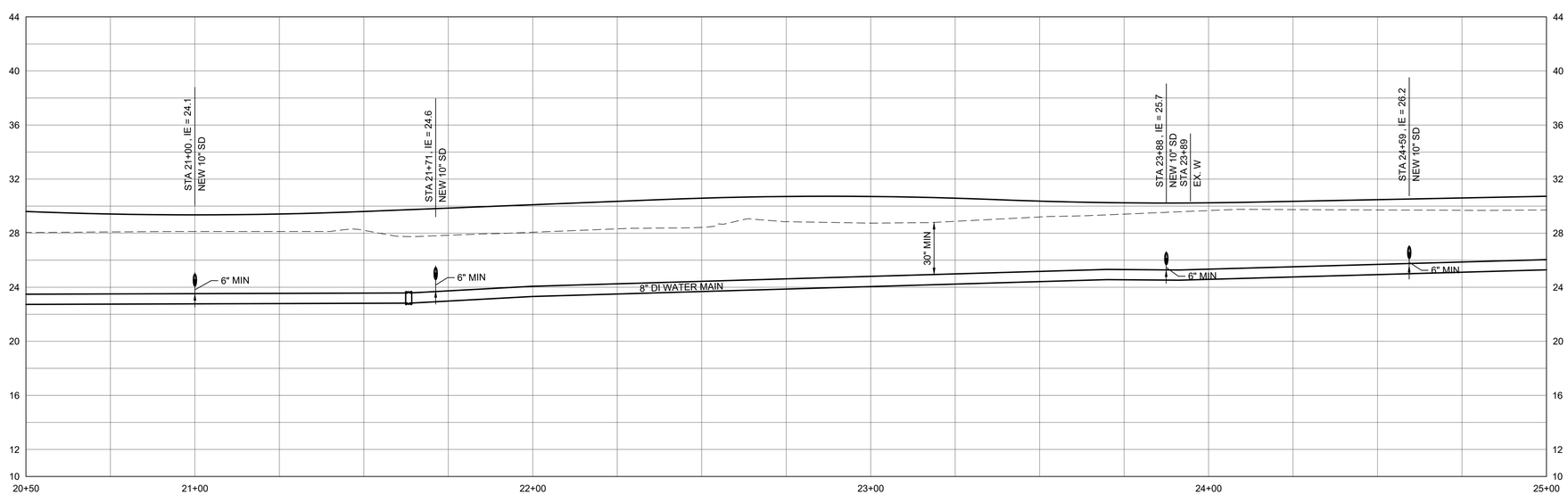

S. 1ST STREET STA 20+50 TO 25+00

HORZ 0 20 40
VERT 0 5 10
SCALE IN FEET

PRELIMINARY

LEEWAY engineering solutions

S. 1ST AND STRAND STREETS ROAD AND UTILITY EXTENSIONS

ST. HELENS, OREGON
WATER PLAN & PROFILE

S. 1ST STREET STA 20+50 TO 25+00

TITLE

#	DATE	DESCRIPTION

REVISIONS

DATUM

OTAK CAD — KJB
DRAWN BY — CHECKED BY

90% DESIGN
STATUS

JANUARY 10, 2022
DATE

19823
PROJECT NUMBER

WA-4

© 2021 OTAK, INC.

If this drawing is not 22" x 34", it has been reduced/enlarged. Scale accordingly.

Plotted: Jan 10, 2022 - 2:16pm Nathan G:\Shared drives\Grading\Projects\2105A 1st and Strand Utility Improvements\500 CAD\501 Plan Sheets\2105A WP&P SHEETS.dwg Layout Name: WA-4 S. 1ST STREET STA 20+50 TO 25+00

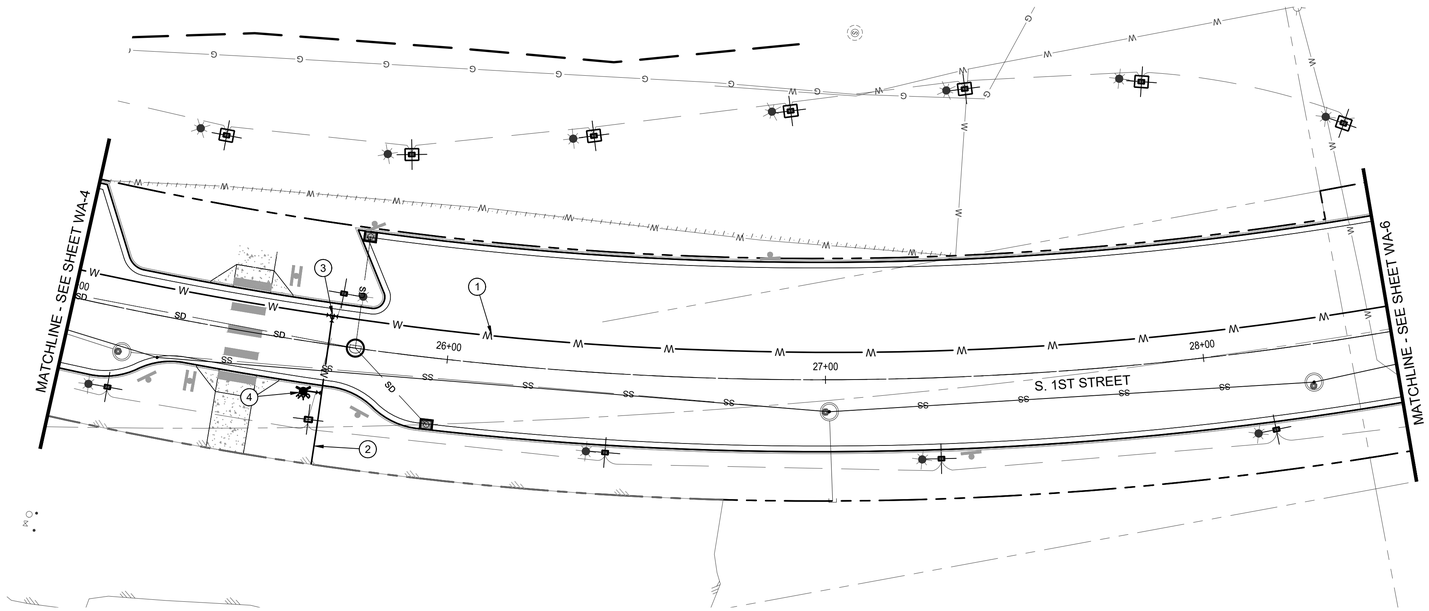

S. 1ST STREET STA 25+00 TO 28+50

0 20 40
SCALE IN FEET

WATER CONSTRUCTION KEY NOTES

1. INSTL NEW 8" DI CL-52, ALL JOINTS TO BE MECHANICALLY RESTRAINED
2. INSTL NEW 6" DI
3. STA 25+68, 7.5' LT
   1-8"X6" TEE, MJXFLG
   2-8" GTV, FLGXMJ
   1-6" GTV, FLGXMJ
   6" DI WATER LINE - 40'
4. STA 25+60, 17.1' RT
   INSTL FH ASSY, SEE ODOT STD DWG RD254
   1-6"TEE, MJXFLG
   1-6" GTV, FLGXMJ
   6" DI WATER LINE - 6'
   SET HYDRANTS A MIN OF 2' FROM FOC OR EP

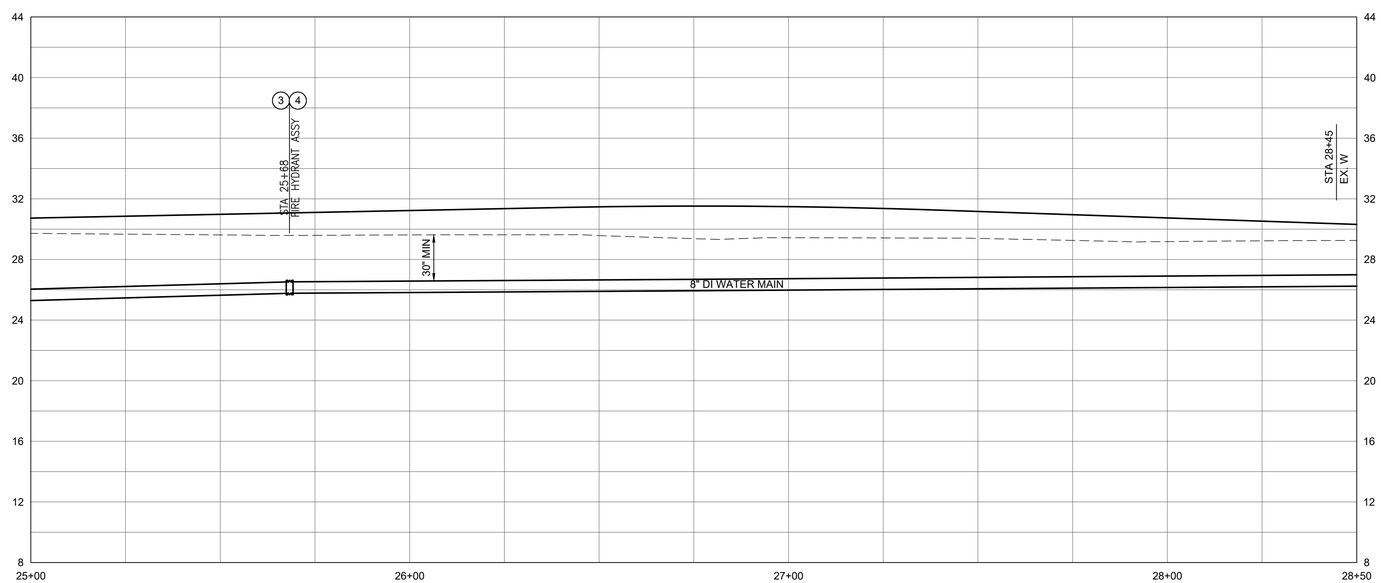

S. 1ST STREET STA 25+00 TO 28+50

HORZ 0 20 40
VERT 0 5 10
SCALE IN FEET

PRELIMINARY

LEEWAY engineering solutions

S. 1ST AND STRAND STREETS ROAD AND UTILITY EXTENSIONS
ST. HELENS, OREGON
WATER PLAN & PROFILE

S. 1ST STREET STA 25+00 TO 28+50

TITLE

#	DATE	DESCRIPTION

REVISIONS

DATUM

OTAK CAD — KJB
DRAWN BY — CHECKED BY

90% DESIGN
STATUS

JANUARY 10, 2022
DATE

19823
PROJECT NUMBER

WA-5

© 2021 OTAK, INC.

If this drawing is not 22" x 34", it has been reduced/enlarged. Scale accordingly.

Plotted: Jan 10, 2022 - 2:16pm Nathan G:\Shared drives\Grading\Projects\2105A 1st and Strand Utility Improvements\500-CAD\501 Plan Sheets\2105A WP&P SHEETS.dwg Layout Name: WA-5 S. 1ST STREET STA 25+00 TO 28+50

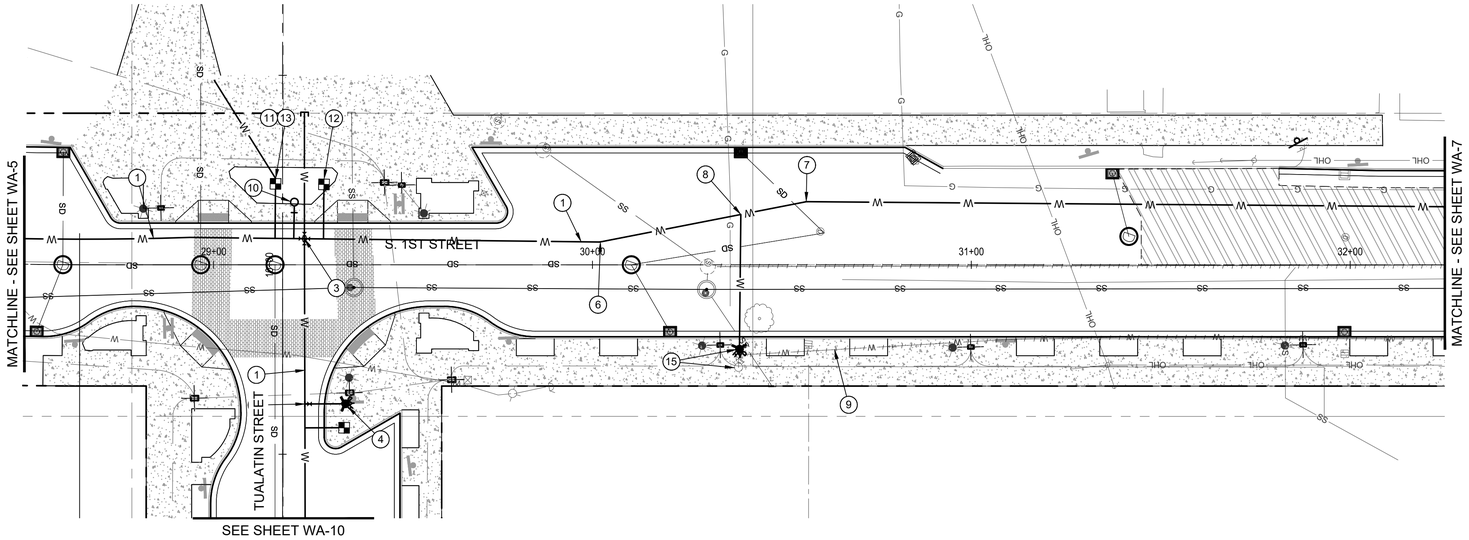

S. 1ST STREET STA 28+50 TO 32+25

0 20 40
SCALE IN FEET

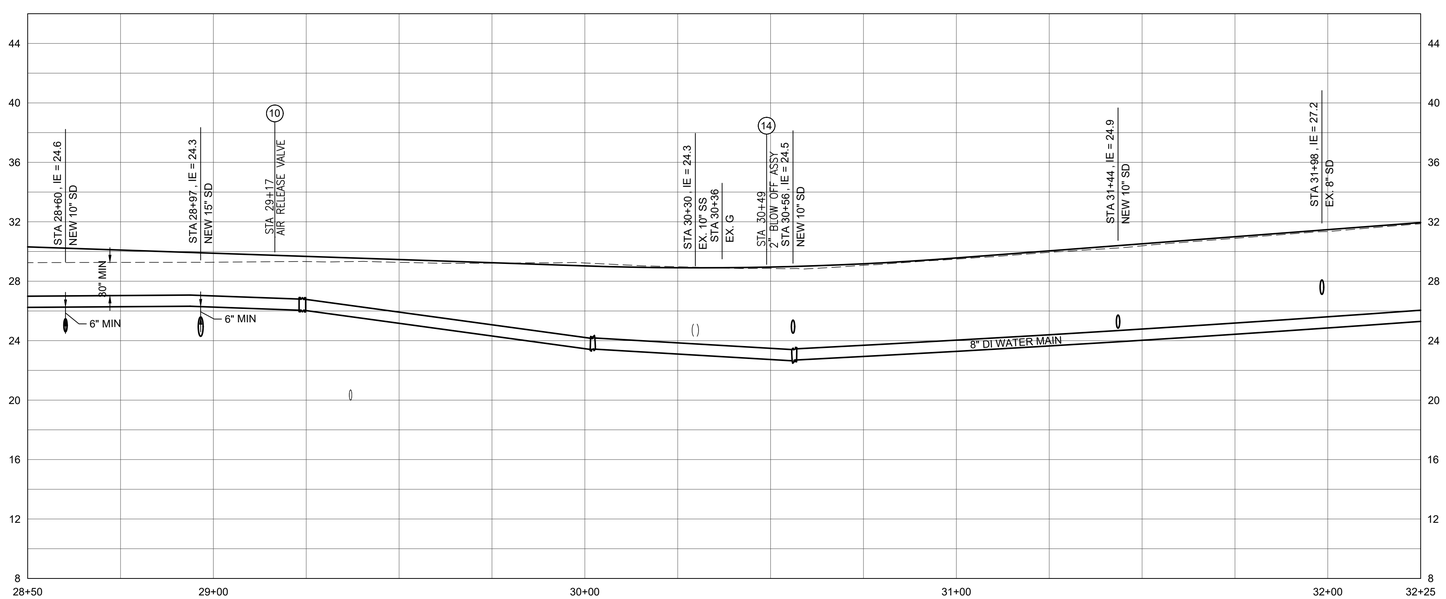

S. 1ST STREET STA 28+50 TO 32+25

HORZ 0 20 40
VERT 0 5 10
SCALE IN FEET

WATER CONSTRUCTION KEY NOTES

1. INSTL NEW 8" DI CL-52, ALL JOINTS TO BE MECHANICALLY RESTRAINED
2. INSTL NEW 6" DI
3. STA 29+24, 6.8 LT
   1 ~ 8" CROSS, FLG
   4 ~ 8" GTV, FLG x MJ
4. STA 29+24, 36.8' RT
   INSTL FH ASSY, SEE ODOT STD DWG RD254
   1 ~ 8"x6"TEE, MJ x FLG
   1 ~ 6" GTV, FLG x MJ
   6" DI WATER LINE - 10.4'
   SET HYDRANTS A MIN OF 2' FROM FOC OR EP
5. SAWCUT & RECONSTRUCT 6' LENGTH OF CURB CENTERED OVER FH XING
6. STA 30+02, 6.1' LT
   INSTL 8" 22.5° BEND, ROTATE AS NEEDED FOR VERT DEFLECTION
7. STA 30+57, 16.8' LT
   INSTL 8" 22.5° BEND, ROTATE AS NEEDED FOR VERT DEFLECTION
8. STA 30+37, 13.3LT
   1 ~ 8" x 6" TEE, MJ x FLG
   6" DI WATER LINE - 38'
   CONNECT TO EXISTING 6" GTV
9. ABANDON EXISTING PIPE
10. STA 29+17, 6.8' LT
    INSTL AIR RELEASE VALVE PER STD DWG 415
11. STA 29+13, 6.8'
    INSTL STD 1" WS, NEW WM BOX, APPROX 12 FT LENGTH, SEE STD DWG 405 SINGLE WATER SERVICE INSTALLATION
12. STA 33+00, 6.8'
    INSTL STD 1" WS, NEW WM BOX, APPROX 12 FT LENGTH, SEE STD DWG 405 SINGLE WATER SERVICE INSTALLATION
13. STA 29+13, 6.8'
    INSTL STD 1" WS FROM NEW WM BOX TO CONNECT TO THE NEW WATER FOUNTAIN, APPROX 30 FT LENGTH
14. STA 30+35, 9.5' LT
    INSTL PERMANENT 2" BLOW OFF ASSY PER STD DWG 420
15. RELOCATE EXISTING FIRE HYDRANT TO 3' FROM FOC

City of St. Helens
FOUNDED 1850

PRELIMINARY

LEEWAY
engineering solutions

S. 1ST AND STRAND STREETS ROAD AND UTILITY EXTENSIONS

ST. HELENS, OREGON
WATER PLAN & PROFILE

S. 1ST STREET STA 28+50 TO 32+25

TITLE

#	DATE	DESCRIPTION

REVISIONS

DATUM

OTAK CAD — KJB
DRAWN BY — CHECKED BY

90% DESIGN
STATUS

JANUARY 10, 2022
DATE

19823
PROJECT NUMBER

WA-6

© 2021 OTAK, INC.

If this drawing is not 22" x 34", it has been reduced/enlarged. Scale accordingly.

Plotted: Jan 10, 2022 - 2:16pm Nathan G:\Shared drives\Grading\Projects\2105A 1st and Strand Utility Improvements\500 CAD\501 Plan Sheets\2105A WP&P SHEETS.dwg Layout Name: WA-6 S. 1ST STREET STA 28+50 TO 32+25

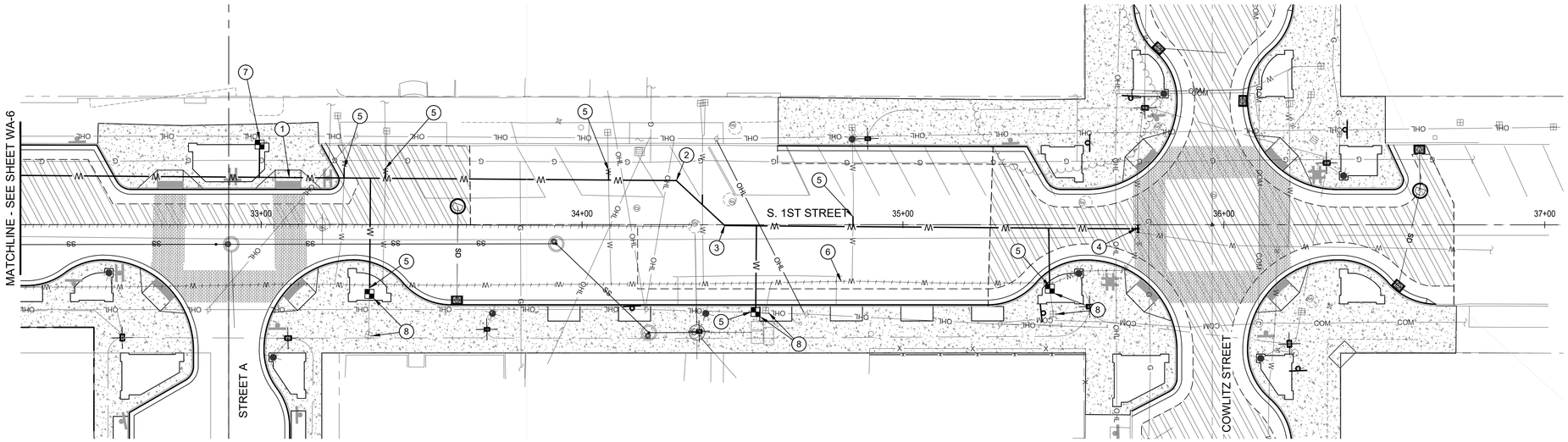

S. 1ST STREET STA 33+50 TO 37+00

0 20 40
SCALE IN FEET

WATER CONSTRUCTION KEY NOTES

1. INSTL NEW 8" DI CL-52, ALL JOINTS TO BE MECHANICALLY RESTRAINED
2. STA 34+29, 13.9' LT
   INSTL 8" 45° BEND, ROTATE AS NEEDED FOR VERT DEFLECTION
3. STA 34+45
   INSTL 8" 45° BEND, ROTATE AS NEEDED FOR VERT DEFLECTION
4. STA 35+73, 1.3' RT
   VALVE ASSY, HOT TAP INTO EXISTING WATER MAIN
   1 ~ 12" x 8" HOT TAP SLEEVE
   1 ~ 8" GV, FLG x MJ
5. INSTL STD 1" WS TO CONNECT TO EXISTING WATER SERVICE. APPROX SERV LENGTH PER SERV SCH.
6. ABANDON EXISTING PIPE
7. STA 33+00, 13.9'
   INSTL STD 1" WS, NEW WM BOX, APPROX SERV LENGTH PER SERV SCH, SEE STD DWG 405 SINGLE WATER SERVICE INSTALLATION
8. RELOCATE EXISTING WM BOX

WATER SERVICE SCHEDULE

STA	SERVICE DIA (IN)	APPROX LENGTH (FT)
33+00	1	10
33+38	1	33
33+43	1	5
34+13	1	5
34+59	1	20
34+85	1	5
35+46	1	17

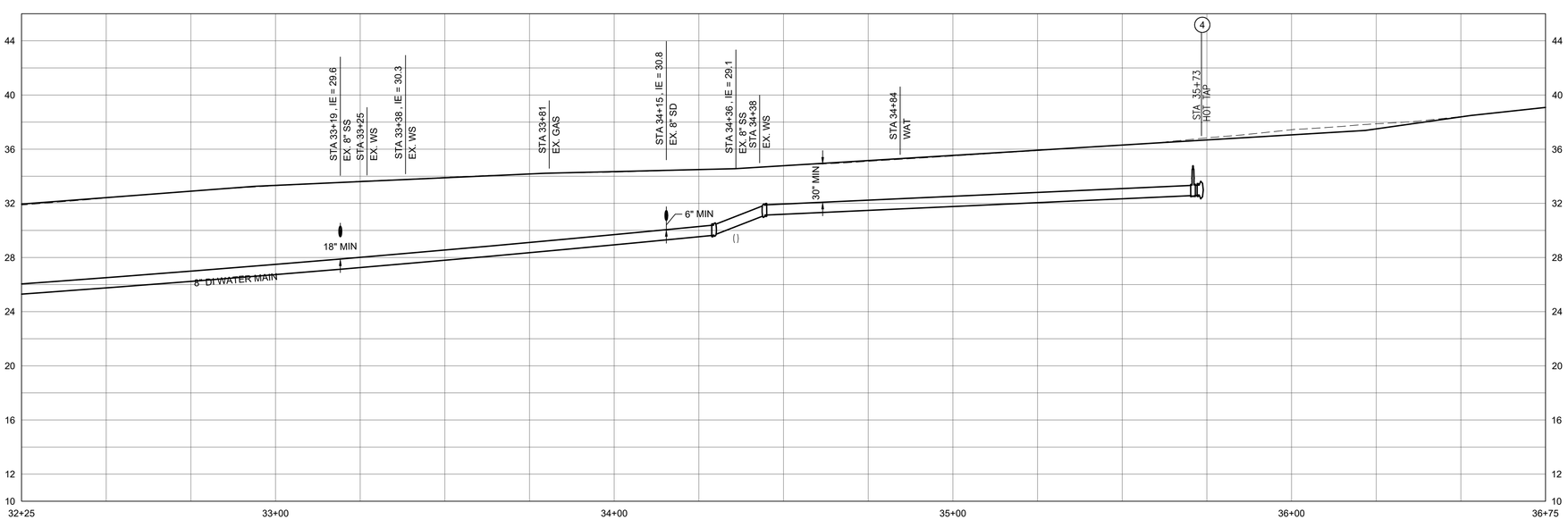

S. 1ST STREET STA 33+50 TO 37+00

HORZ 0 20 40
VERT 0 5 10
SCALE IN FEET

City of St. Helens FOUNDED 1850

PRELIMINARY

LEEWAY engineering solutions

S. 1ST AND STRAND STREETS ROAD AND UTILITY EXTENSIONS

ST. HELENS, OREGON
WATER PLAN & PROFILE

S. 1ST STREET STA 32+25 TO 36+75

TITLE

#	DATE	DESCRIPTION

REVISIONS

DATUM

OTAK CAD — KJB
DRAWN BY — CHECKED BY

90% DESIGN
STATUS

JANUARY 10, 2022
DATE

19823
PROJECT NUMBER

WA-7

© 2021 OTAK, INC.

If this drawing is not 22" x 34", it has been reduced/enlarged. Scale accordingly.

Plotted: Jan 10, 2022 - 2:17pm Nathan G:\Shared drives\Grading\Projects\21054 1st and Strand Utility Improvements\500 CAD\501 Plan Sheets\21054 W P&P SHEETS.dwg Layout Name: WA-7 S. 1ST STREET STA 32+25 TO 36+75

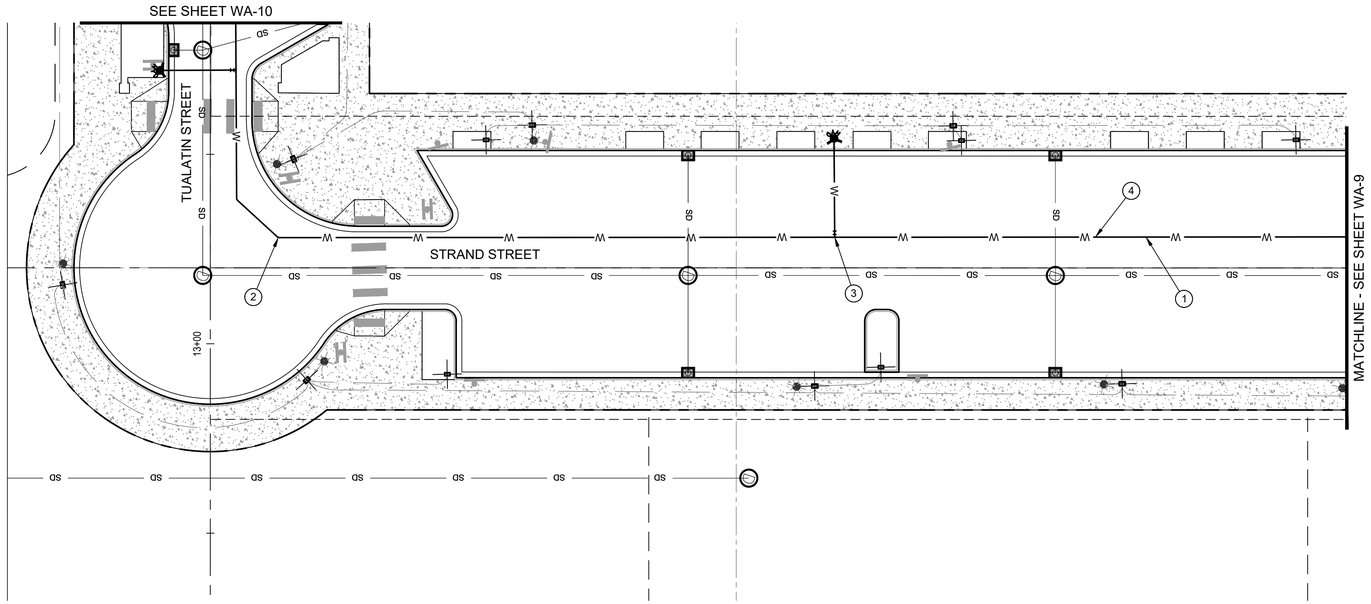

STRAND STREET STA 9+50 TO 13+00

0 20 40
SCALE IN FEET

WATER CONSTRUCTION KEY NOTES

1. INSTL NEW 8" DI CL-52, ALL JOINTS TO BE MECHANICALLY RESTRAINED
2. STA 10+20, 8.0' LT
   INSTL 8" 45° BEND, ROTATE AS NEEDED FOR VERT DEFLECTION
3. STA 11+64, 8.1' LT
   INSTL FH ASSY, SEE ODOT STD DWG RD254
   1 ~ 6" x 8" TEE, MJX x FLG
   1 ~ 6" GTV, FLG x MJ
   6" DI WATER LINE - 27.9'
   SET HYDRANTS A MIN OF 2' FROM FOC OR EP
4. STA 12+40, 8.1' LT
   INSTL PERMANENT 2" BLOW OFF ASSY PER STD DWG 420

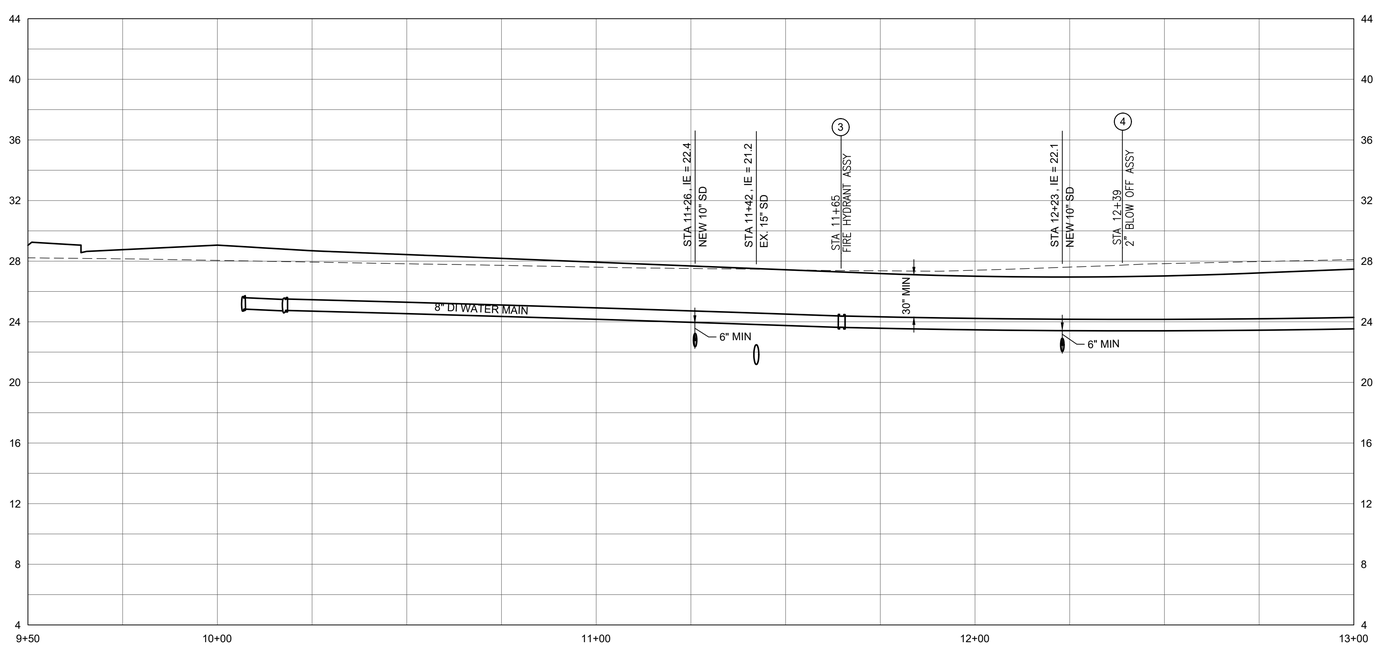

STRAND STREET STA 9+50 TO 13+00

HORZ 0 20 40
VERT 0 5 10
SCALE IN FEET

PRELIMINARY

LEEWAY engineering solutions

S. 1ST AND STRAND STREETS ROAD AND UTILITY EXTENSIONS

ST. HELENS, OREGON
WATER PLAN & PROFILE

STRAND STREET STA 9+50 TO 13+00

TITLE

#	DATE	DESCRIPTION

REVISIONS

DATUM

OTAK CAD — KJB
DRAWN BY — CHECKED BY

90% DESIGN
STATUS

JANUARY 10, 2022
DATE

19823
PROJECT NUMBER

WA-8

© 2021 OTAK, INC.

If this drawing is not 22" x 34", it has been reduced/enlarged. Scale accordingly.

Plotted: Jan 10, 2022 - 2:17pm Nathan G:\Shared drives\Grayling\Projects\21054 1st and Strand Utility Improvements\500 CAD\501 Plan Sheets\21054 W P&P SHEETS.dwg Layout Name: WA-8 STRAND STREET STA 9+50 TO 13+00

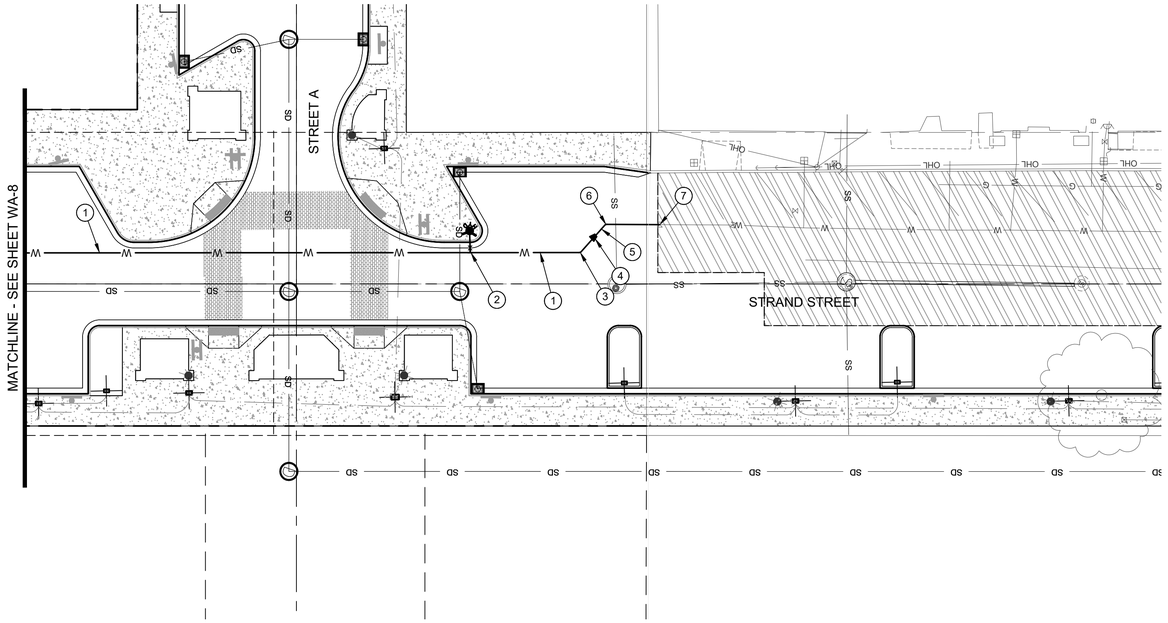

STRAND STREET STA 13+00 TO 16+00

0 20 40
SCALE IN FEET

WATER CONSTRUCTION KEY NOTES

1. INSTL NEW 8" DI CL-52, ALL JOINTS TO BE MECHANICALLY RESTRAINED
2. STA14+18, 8.2' LT
   INSTL FH ASSY, SEE ODOT STD DWG RD254
   1 ~ 6" x 8" TEE, MJ x FLG
   1 ~ 6" GTV, FLG x MJ
   6" DI WATER LINE - 6.0'
   SET HYDRANTS A MIN OF 2' FROM FOC OR EP
3. STA 14+60, 8.6' LT
   INSTL 8" 45° BEND, ROTATE AS NEEDED FOR VERT DEFLECTION
4. STA 14+66, 10' LT
   INSTL 8" x 6" REDUCER, MJ
5. INSTL NEW 6" DI
6. STA 14+68, 15.7' LT
   INSTL 6" 45° BEND, ROTATE AS NEEDED FOR VERT DEFLECTION
7. STA 14+71, 15.5' LT
   CONNECT TO EXISTING 6" GATE VALVE

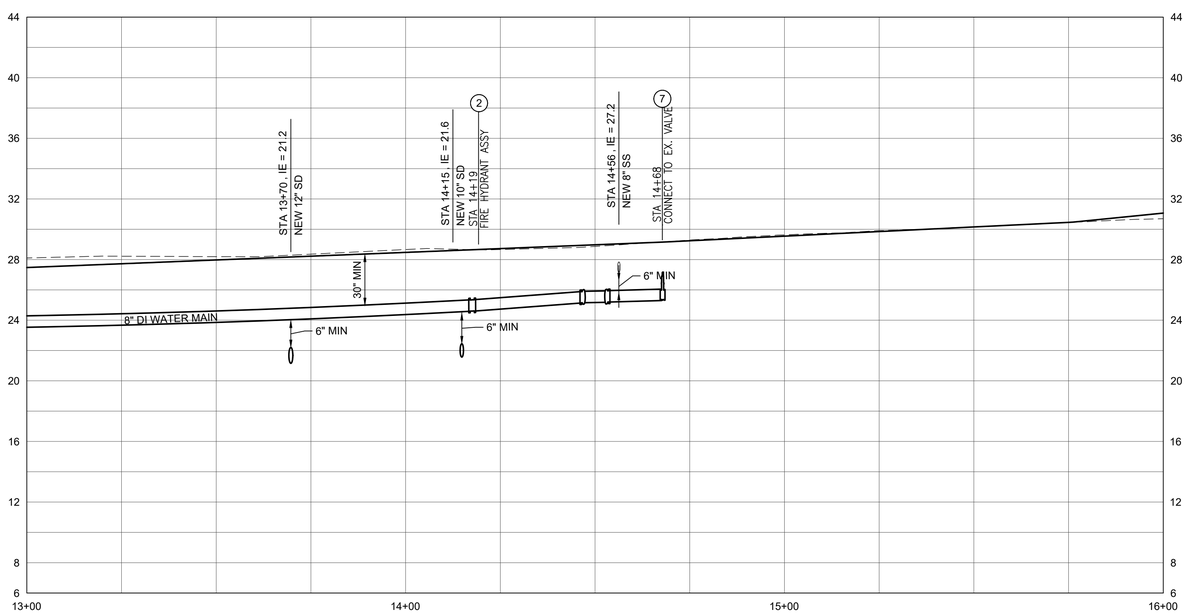

STRAND STREET STA 13+00 TO 16+00

HORZ 0 20 40
VERT 0 5 10
SCALE IN FEET

PRELIMINARY

LEEWAY engineering solutions

S. 1ST AND STRAND STREETS ROAD AND UTILITY EXTENSIONS

ST. HELENS, OREGON
WATER PLAN & PROFILE

STRAND STREET STA 13+00 TO 16+00

#	DATE	DESCRIPTION

REVISIONS

DATUM

OTAK CAD — KJB
DRAWN BY — CHECKED BY

90% DESIGN
STATUS

JANUARY 10, 2022
DATE

19823
PROJECT NUMBER

WA-9

© 2021 OTAK, INC.

If this drawing is not 22" x 34", it has been reduced/enlarged. Scale accordingly.

Plotted: Jan 10, 2022 - 2:17pm Nathan G:\Shared drives\Gravity\Projects\2105A 1st and Strand Utility Improvements\500 CAD\501 Plan Sheets\2105A W PAP SHEETS.dwg Layout Name: WA-9 STRAND STREET STA 13+00 TO 16+00

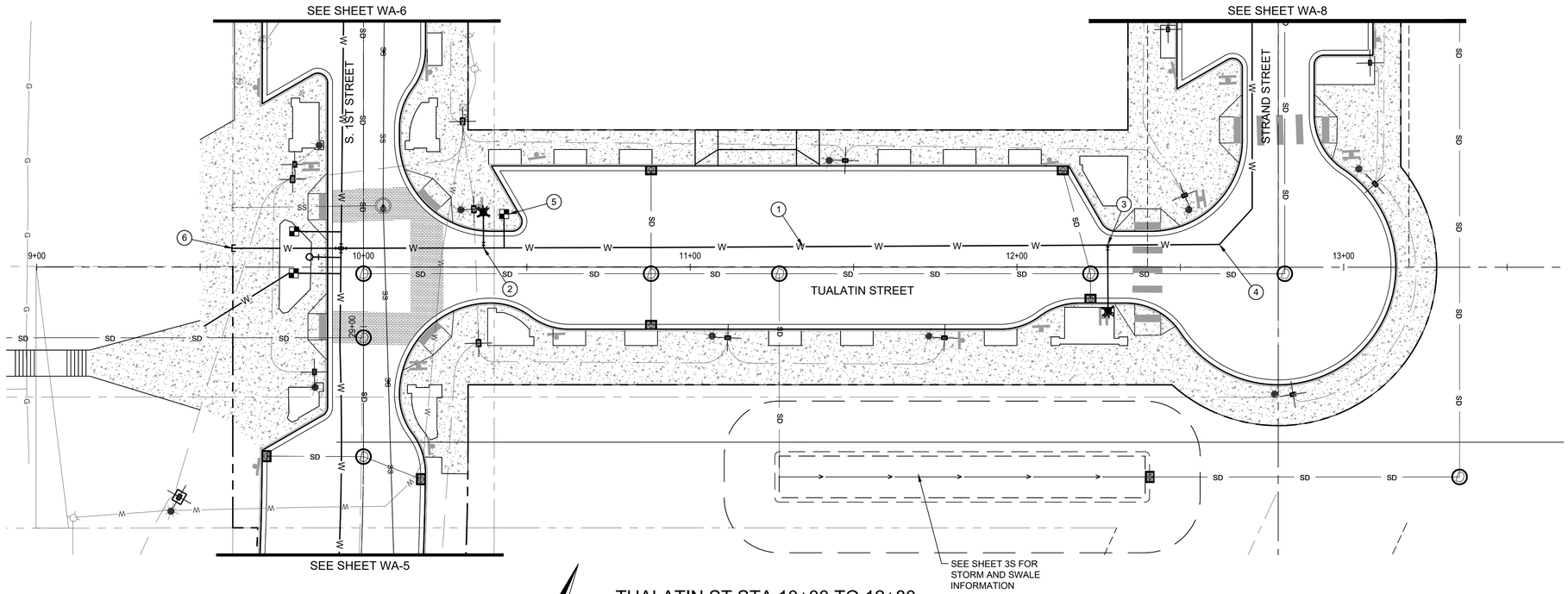

TUALATIN ST STA 10+00 TO 12+80

0 20 40
SCALE IN FEET

WATER CONSTRUCTION KEY NOTES

1. INSTL NEW 8" DI CL-52, ALL JOINTS TO BE MECHANICALLY RESTRAINED
2. STA 9+93, 7.0' LT
   INSTL FH ASSY, SEE ODOT STD DWG RD254
   1 ~ 6" x 8" TEE, MJ x FLG
   1 ~ 6" GTV, FLG x MJ
   6" DI WATER LINE - 10.7'
   SET HYDRANTS A MIN OF 2' FROM FOC OR EP
3. STA 12+28, 6.8' LT
   INSTL FH ASSY, SEE ODOT STD DWG RD254
   1 ~ 6" x 8" TEE, MJ x FLG
   1 ~ 6" GTV, FLG x MJ
   6" DI WATER LINE - 20.1'
   SET HYDRANTS A MIN OF 2' FROM FOC OR EP
4. STA 12+72, 12.0' LT
   INSTL 8" 45° BEND, ROTATE AS NEEDED FOR VERT DEFLECTION
5. STA 10+43, 5.8'
   INSTL STD 1" WS, NEW WM BOX, APPROX 8 FT LENGTH, SEE STD DWG 405 SINGLE WATER SERVICE INSTALLATION
6. STA 12+40, 8.1' LT
   INSTL TEMPORARY 2" BLOW OFF ASSY PER STD DWG 422

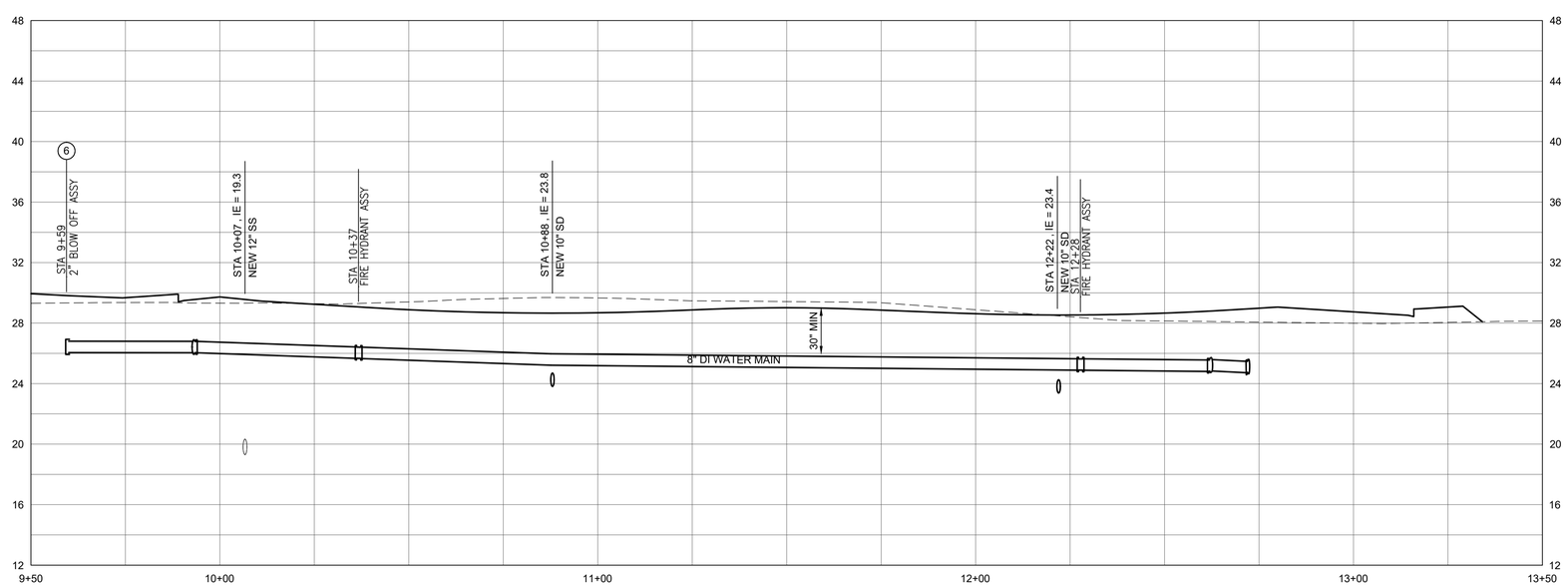

TUALATIN ST STA 10+00 TO 12+80

HORZ 0 20 40
VERT 0 5 10
SCALE IN FEET

PRELIMINARY

LEEWAY engineering solutions

S. 1ST AND STRAND STREETS ROAD AND UTILITY EXTENSIONS

ST. HELENS, OREGON
WATER PLAN & PROFILE

TUALATIN ST STA 10+00 TO 12+80

TITLE

#	DATE	DESCRIPTION

REVISIONS

DATUM

OTAK CAD — KJB
DRAWN BY — CHECKED BY

90% DESIGN
STATUS

JANUARY 10, 2022
DATE

19823
PROJECT NUMBER

WA-10

© 2021 OTAK, INC.

If this drawing is not 22" x 34", it has been reduced/enlarged. Scale accordingly.

Plotted: Jan 10, 2022 - 2:17pm Nathan G:\Shared drives\Gravity\Projects\2105A 1st and Strand Utility Improvements\500-CAD\501-Plan Sheets\2105A W-PAP SHEETS.dwg Layout Name: WA-10 TUALATIN ST STA 10+00 TO 12+80

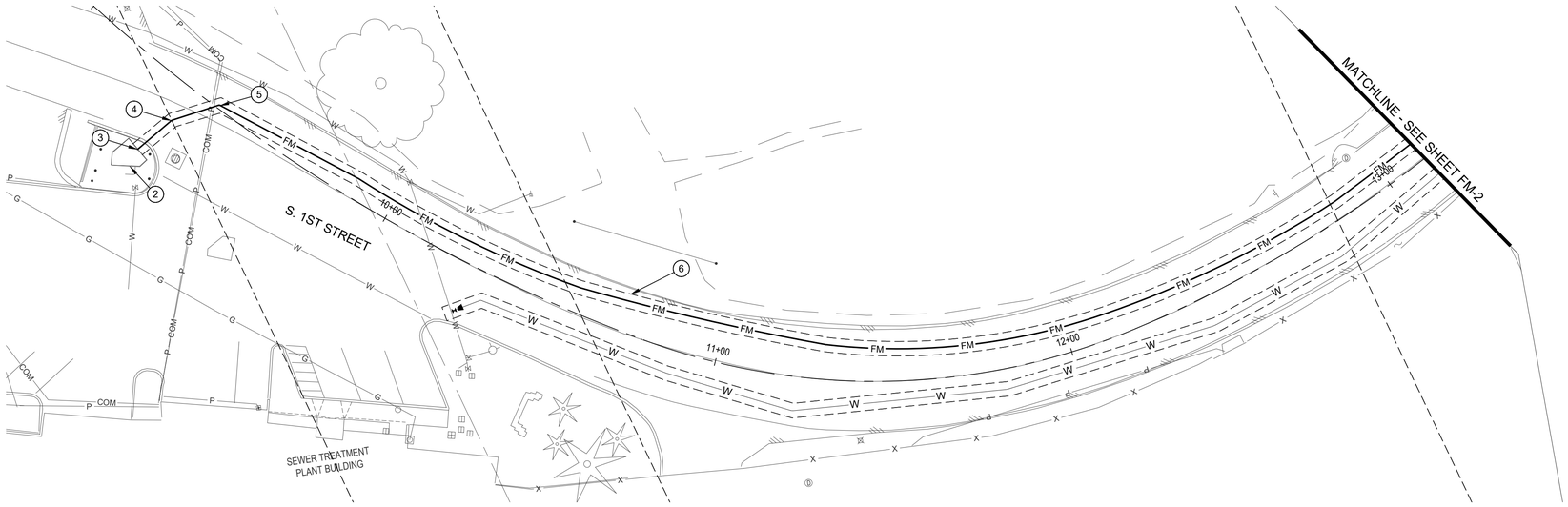

S. 1ST STREET STA 9+25 TO 13+25

0 20 40
SCALE IN FEET

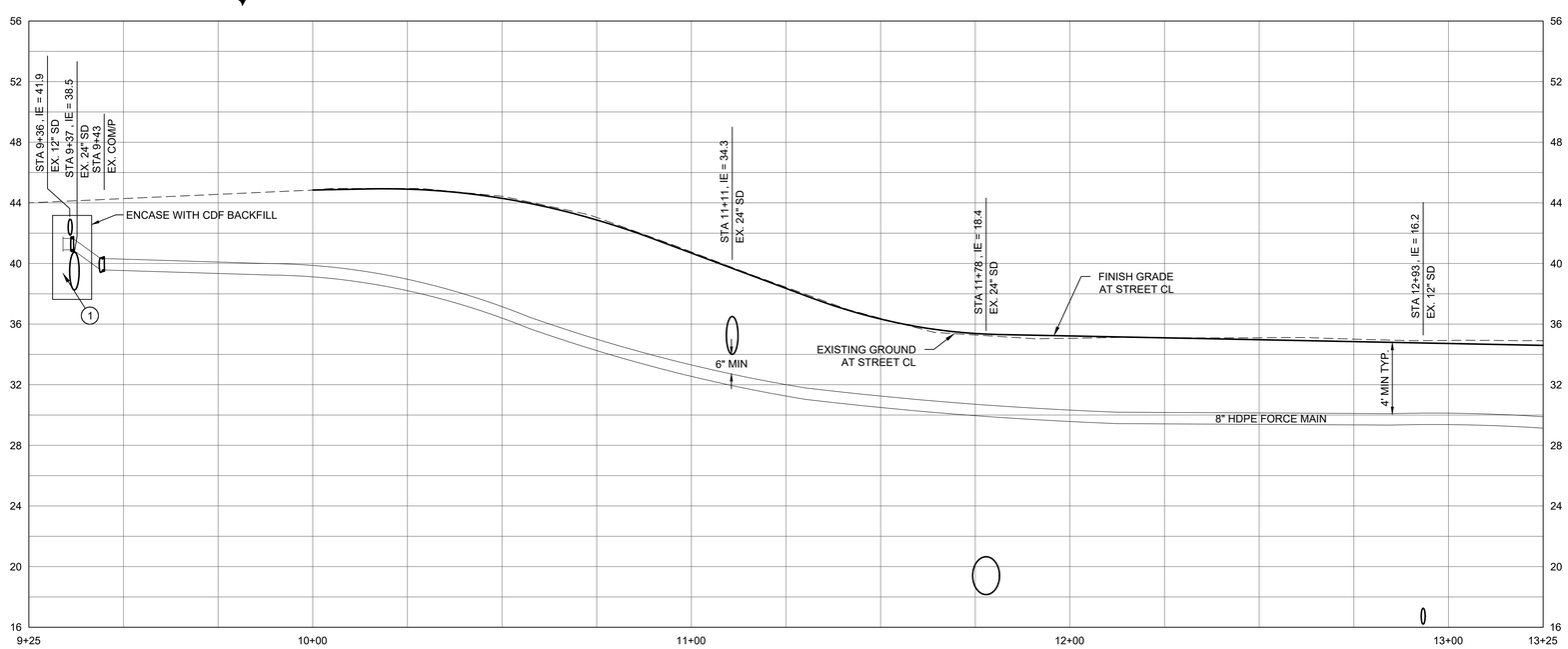

S. 1ST STREET STA 9+25 TO 13+25

HORZ 0 20 40
VERT 0 5 10
SCALE IN FEET

FORCE MAIN CONSTRUCTION KEY NOTES

1. START FORCEMAIN AT STA 9+36. PROVIDE HDPE FLANGE ADAPTER WITH BACKER RING AND WOOD/PLYWOOD BLIND FLANGE. BRING TONER WIRE TO AGREED UPON LOCATION OFF OF PAVED STREET.
2. REMOVE WASTEWATER TREATMENT PLANT JUNCTION BOX SLIDE GATE.
3. CONNECT TO WASTEWATER TREAMENT PLANT JUNCTION STRUCTURE, SEE DETAIL 1, SHEET FM-4
4. 8" DR 17 HDPE 22.5° BEND
5. 8" DR 17 HDPE 45° BEND
6. TRENCH REPAIR PER CITY STANDARD DETAIL 300

GENERAL NOTES

1. NOT ALL WATER SERVICE AND SANITARY SERVICE LATERALS ARE SHOWN.
2. FORCE MAIN TO BE CONSTRUCTED WITH 8" (O.D.) IPS, DR-17 HDPE PIPE.
3. UNLESS SPECIFICALLY CALLED OUT, ALL PIPE BENDS ARE TO BE MADE BY GRADUAL/SMOOTH BENDING OF HDPE PIPE. BENDING SHALL NOT EXCEED 50% OF THE MANUFACTURER'S ALLOWED BENDING RADII.

City of St. Helens
FOUNDED 1850

PRELIMINARY

LEEWAY
engineering solutions

S. 1ST AND STRAND STREETS
ROAD AND UTILITY EXTENSIONS
ST. HELENS, OREGON
FORCE MAIN PLAN & PROFILE
S. 1ST STREET STA 9+25 TO 13+25

TITLE

.	DATE	DESCRIPTION

REVISIONS

DATUM

OTAK CAD — KB—
DRAWN BY — CHECKED BY

90% DESIGN
STATUS

JANUARY 10, 2022
DATE

19823
PROJECT NUMBER

FM-1

© 2021 OTAK, INC.

If this drawing is not 22" x 34", it has been reduced/enlarged. Scale accordingly.

Plotted: Jan 10, 2022 - 3:49pm Nathan G:\Shared drives\Gravity\Projects\21054_1st and Strand Utility Improvements\500 CAD\501 Plan Sheets\21054 FM P&P SHEETS.dwg Layout Name: FM-1 S. 1ST STREET STA 9+25 TO 13+25

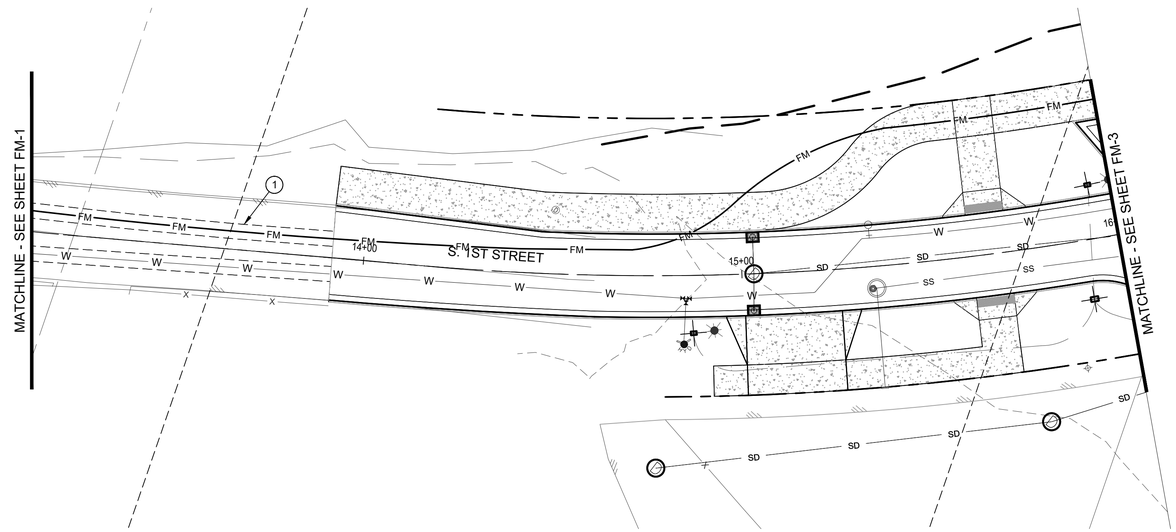

S. 1ST STREET STA 13+25 TO 16+00

0 20 40
SCALE IN FEET

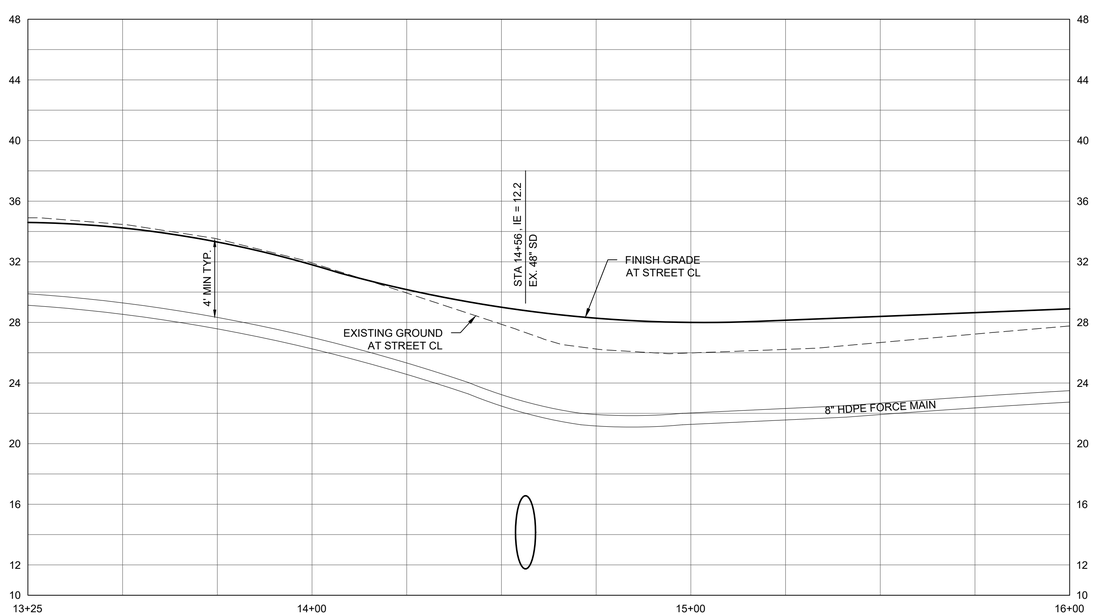

S. 1ST STREET STA 13+25 TO 16+00

HORZ 0 20 40
VERT 0 5 10
SCALE IN FEET

FORCE MAIN CONSTRUCTION KEY NOTES

1. TRENCH REPAIR PER CITY STANDARD DETAIL 300

GENERAL NOTES

1. NOT ALL WATER SERVICE AND SANITARY SERVICE LATERALS ARE SHOWN.
2. FORCE MAIN TO BE CONSTRUCTED WITH 8" (O.D.) IPS, DR-17 HDPE PIPE.
3. UNLESS SPECIFICALLY CALLED OUT, ALL PIPE BENDS ARE TO BE MADE BY GRADUAL/SMOOTH BENDING OF HDPE PIPE. BENDING SHALL NOT EXCEED 50% OF THE MANUFACTURER'S ALLOWED BENDING RADII.

City of St. Helens
FOUNDED 1850

PRELIMINARY

LEEWAY
engineering solutions

S. 1ST AND STRAND STREETS
ROAD AND UTILITY EXTENSIONS
ST. HELENS, OREGON
FORCE MAIN PLAN & PROFILE
S. 1ST STREET STA 13+25 TO 16+00

TITLE

#	DATE	DESCRIPTION

REVISIONS

DATUM

OTAK CAD — KJB
DRAWN BY — CHECKED BY

90% DESIGN
STATUS

JANUARY 10, 2022
DATE

19823
PROJECT NUMBER

FM-2

© 2021 OTAK, INC.

If this drawing is not 22" x 34", it has been reduced/enlarged. Scale accordingly.

Plotted: Jan 10, 2022 - 3:50pm Nathan G:\Shared drives\Grading\Projects\21054_1st and Strand Utility Improvements\500 CAD\501 Plan Sheets\21054 FM PKP SHEETS.dwg Layout Name: FM-2 S. 1ST STREET STA 13+25 TO 16+00

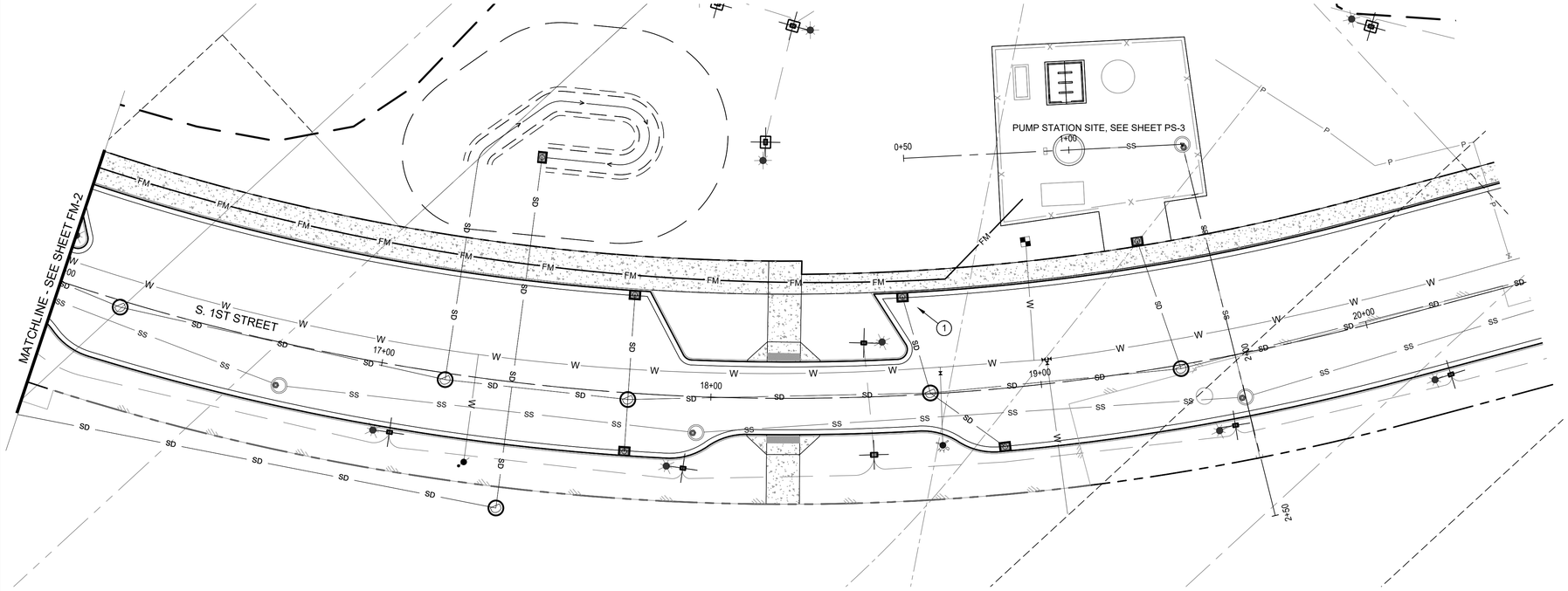

S. 1ST STREET STA 16+00 TO 20+50

0 20 40
SCALE IN FEET

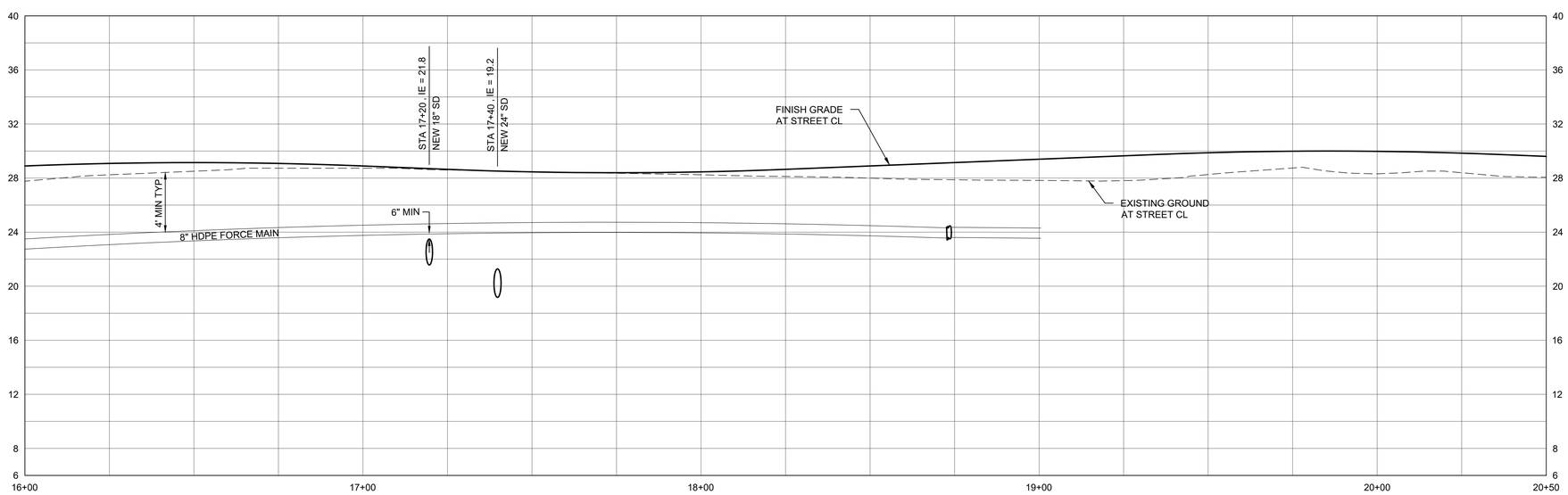

S. 1ST STREET STA 16+00 TO 20+50

HORZ 0 20 40
VERT 0 5 10
SCALE IN FEET

FORCE MAIN CONSTRUCTION KEY NOTES

1. 8" DR 17 HDPE 45° BEND

GENERAL NOTES

1. NOT ALL WATER SERVICE AND SANITARY SERVICE LATERALS ARE SHOWN.
2. FORCE MAIN TO BE CONSTRUCTED WITH 8" (O.D.) IPS, DR-17 HDPE PIPE.
3. UNLESS SPECIFICALLY CALLED OUT, ALL PIPE BENDS ARE TO BE MADE BY GRADUAL/SMOOTH BENDING OF HDPE PIPE.

City of St. Helens FOUNDED 1850

PRELIMINARY

LEEWAY engineering solutions

S. 1ST AND STRAND STREETS ROAD AND UTILITY EXTENSIONS

ST. HELENS, OREGON
FORCE MAIN PLAN & PROFILE

S. 1ST STREET STA 16+00 TO 20+50

TITLE

#	DATE	DESCRIPTION

REVISIONS

DATUM

OTAK CAD — KJB
DRAWN BY — CHECKED BY

90% DESIGN
STATUS

JANUARY 10, 2022
DATE

19823
PROJECT NUMBER

FM-3

© 2021 OTAK, INC.

If this drawing is not 22" x 34", it has been reduced/enlarged. Scale accordingly.

Plotted: Jan 10, 2022 - 3:50pm Nathan G:\Shared drives\Grading\Projects\21054_1st and Strand Utility Improvements\500 CAD\50 Plan Sheets\21054 FM P&P SHEETS.dwg Layout Name: FM-3 S. 1ST STREET STA 16+00 TO 20+50

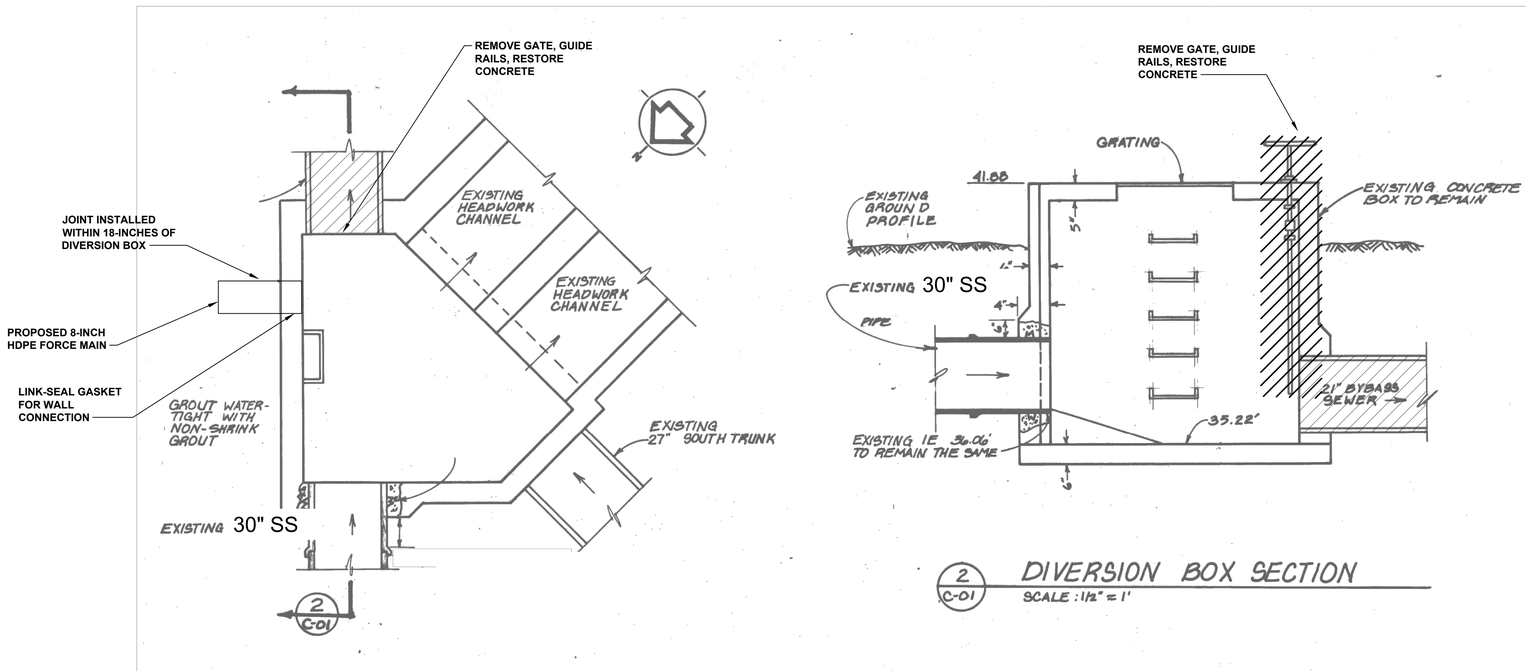

1 / FM-1 DIVERSION BOX MODIFICATIONS

SCALE: NTS

PRELIMINARY

LEEWAY engineering solutions

S. 1ST AND STRAND STREETS ROAD AND UTILITY EXTENSIONS

ST. HELENS, OREGON
FORCE MAIN DETAILS

DIVERSION BOX MODIFICATIONS

TITLE

#	DATE	DESCRIPTION

REVISIONS

DATUM

OTAK CAD — KJB

DRAWN BY — CHECKED BY

90% DESIGN

STATUS

JANUARY 10, 2022

DATE

19823

PROJECT NUMBER

FM-4

© 2021 OTAK, INC.

If this drawing is not 22" x 34", it has been reduced/enlarged. Scale accordingly.

Plotted: Jan 10, 2022 - 3:50pm Nathan G:\Shared drives\Grading\Projects\2105A 1st and Strand Utility Improvements\500 CAD\501 Plan Sheets\2105A DEMO SHEETS.dwg Layout Name: FM-4 DIVERSION BOX MODIFICATIONS

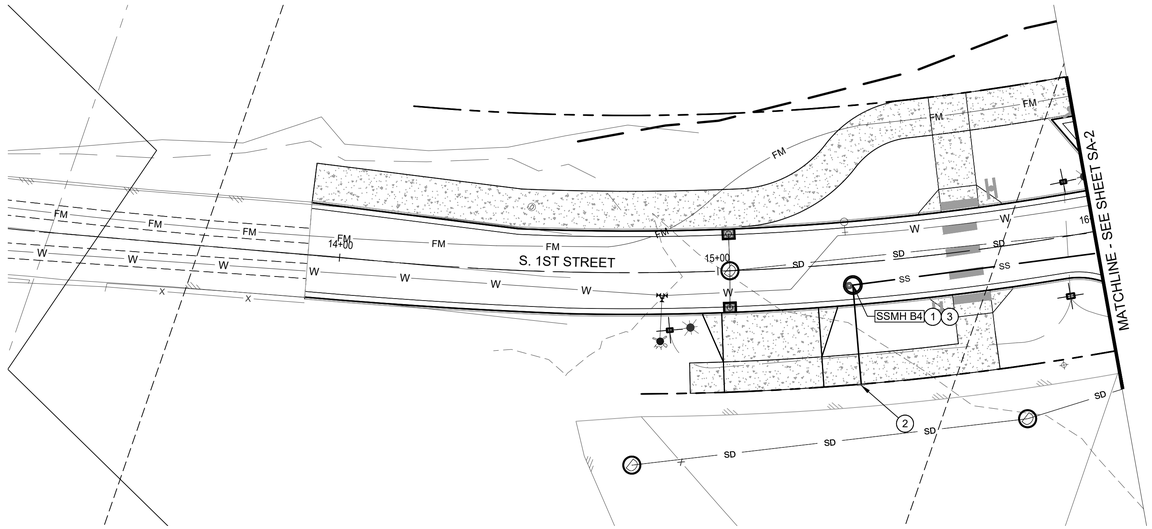

S. 1ST STREET STA 13+25 TO 16+00

0 20 40
SCALE IN FEET

SEWER CONSTRUCTION KEY NOTES

1. CONSTRUCT MANHOLE PER CITY OF ST. HELENS STD DETAIL 350, SHEET 2B-3. SEE PROFILE FOR SIZE, RIM, AND INVERT INFORMATION.
2. CONSTRUCT NEW SERVICE LATERAL TO PROPERTY LINE WITH TEMPORARY PLUG.
3. MAJOR MANHOLE ADJUSTMENT WITH 1ST STREET CONSTRUCTION TO BRING THE RIM TO THE PROPOSED GRADE

MANHOLE COORDINATES TABLE

SSMH ID	NORTHING	EASTING
B4	587369.52	603664.38

NEW LATERAL TABLE

MAIN STA, OF TEE	APPROX, LENGTH	SLOPE	INV, ELEV, @END
15+35	38'	2.00%	19.93

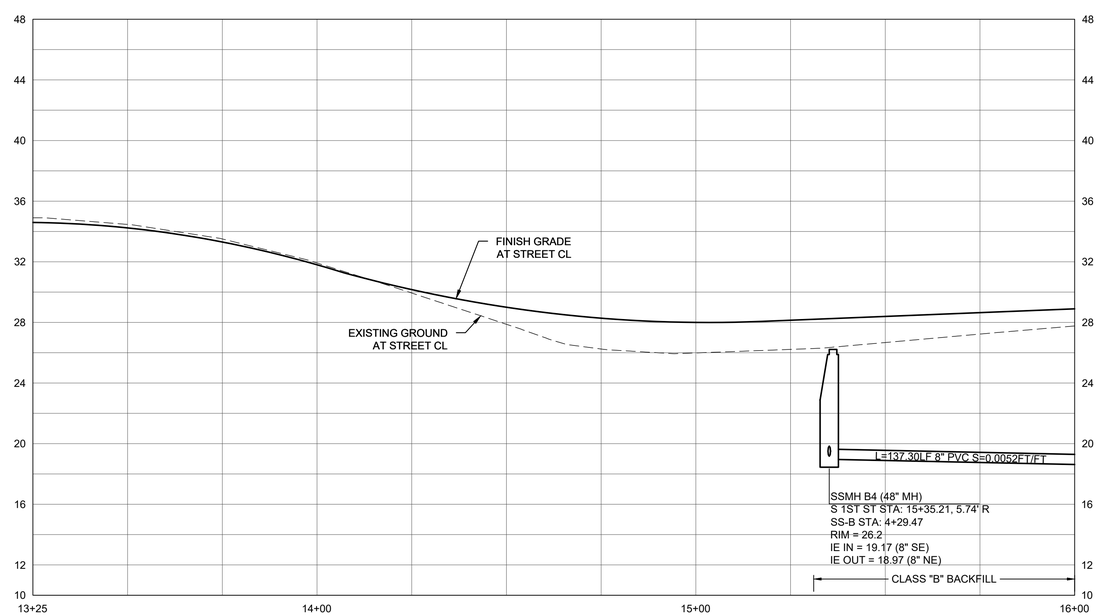

S. 1ST STREET STA 13+25 TO 16+00

HORZ 0 20 40
VERT 0 5 10
SCALE IN FEET

PRELIMINARY

LEEWAY engineering solutions

S. 1ST AND STRAND STREETS ROAD AND UTILITY EXTENSIONS
ST. HELENS, OREGON
SANITARY SEWER PLAN & PROFILE

S. 1ST STREET STA 13+25 TO 16+00

TITLE

#	DATE	DESCRIPTION

REVISIONS

DATUM

OTAK CAD — KJB
DRAWN BY — CHECKED BY

90% DESIGN
STATUS

JANUARY 10, 2022
DATE

19823
PROJECT NUMBER

SA-1

© 2021 OTAK, INC.

If this drawing is not 22" x 34", it has been reduced/enlarged. Scale accordingly.

Plotted: Jan 10, 2022 - 3:57pm Nathan G:\Shared drives\Grading\Projects\21054 1st and Strand Utility Improvements\500 CAD\501 Plan Sheets\21054 SS P&P SHEETS.dwg Layout Name: SA-1 S. 1ST STREET STA 13+25 TO 16+00

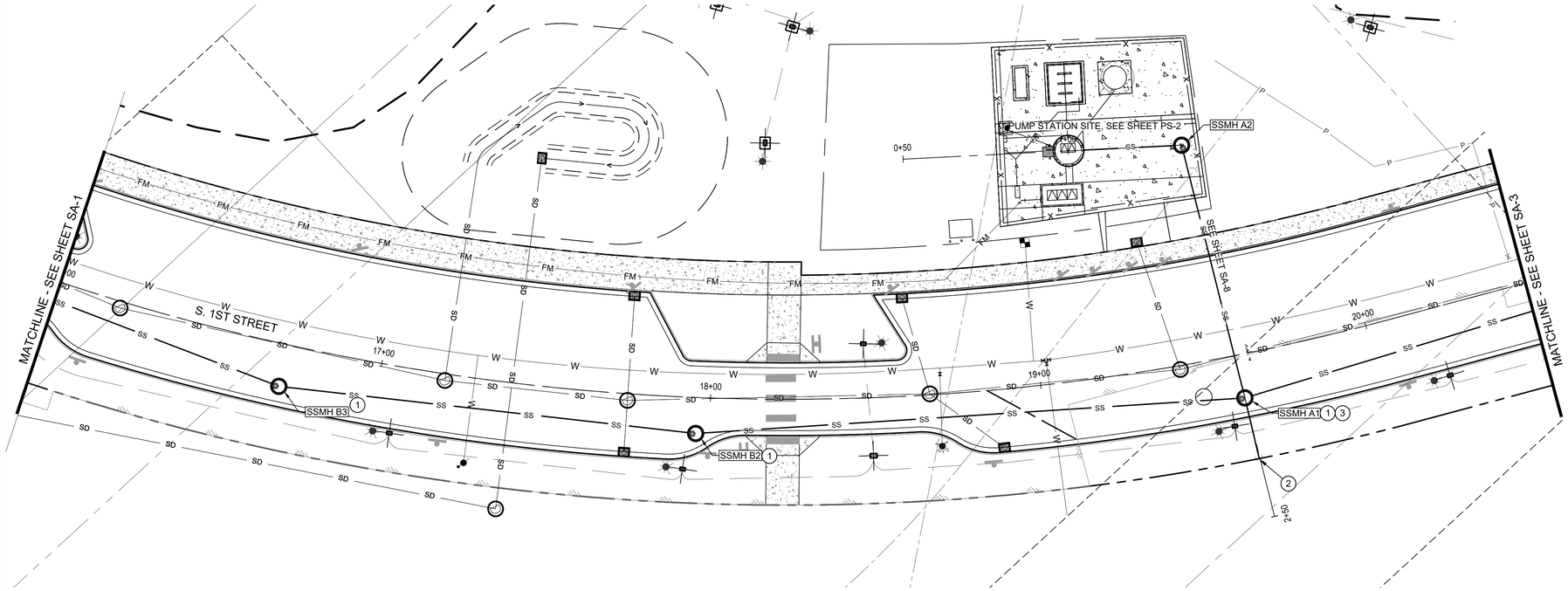

S. 1ST STREET STA 16+00 TO 20+50

0 20 40
SCALE IN FEET

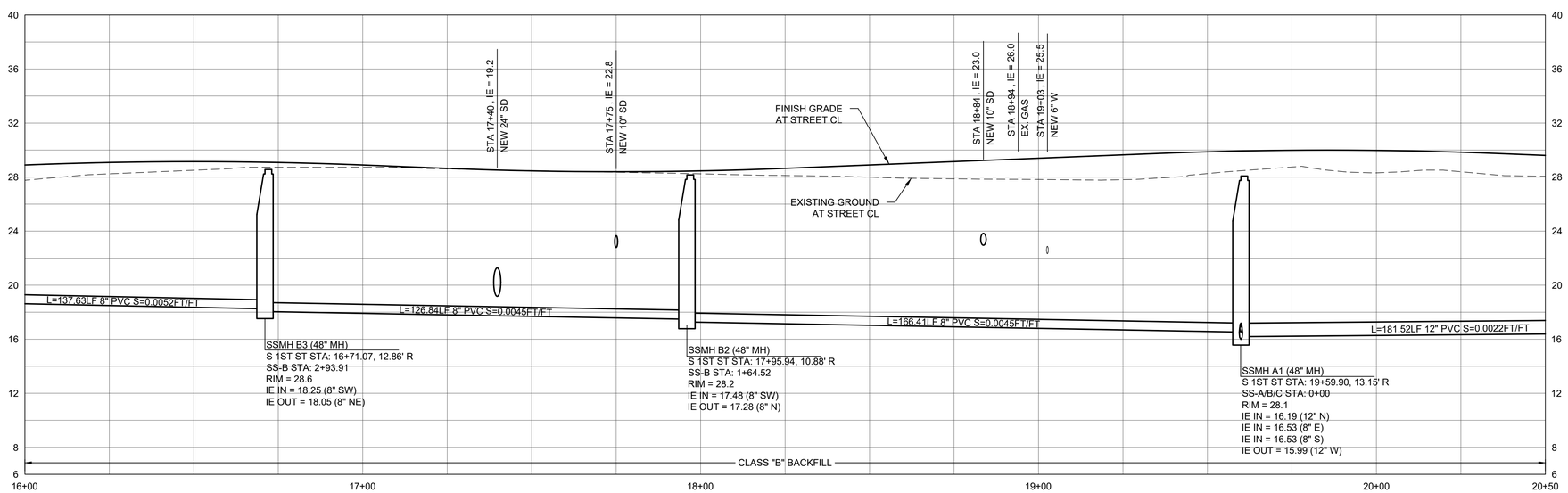

S. 1ST STREET STA 16+00 TO 20+50

HORZ 0 20 40
VERT 0 5 10
SCALE IN FEET

SEWER CONSTRUCTION KEY NOTES

1. CONSTRUCT MANHOLE PER CITY OF ST. HELENS STD DETAIL 350, SHEET 2B-3. SEE PROFILE FOR SIZE, RIM, AND INVERT INFORMATION.
2. CONSTRUCT NEW SEWER MAIN TO EDGE OF RIGHT-OF-WAY WITH TEMPORARY PLUG.
3. MAJOR MANHOLE ADJUSTMENT WITH 1ST STREET CONSTRUCTION TO BRING THE RIM TO THE PROPOSED GRADE

MANHOLE COORDINATES TABLE

SSMH ID	NORTHING	EASTING
B3	587464.17	603764.30
B2	587571.69	603831.58
A1	587726.11	603893.60

NEW LATERAL TABLE

MAIN STA, OF TEE	APPROX, LENGTH	SLOPE	INV, ELEV, @END
19+60	18'	2.00%	16.89

City of St. Helens
FOUNDED 1850

PRELIMINARY

LEEWAY
engineering solutions

S. 1ST AND STRAND STREETS ROAD AND UTILITY EXTENSIONS
ST. HELENS, OREGON
SANITARY SEWER PLAN & PROFILE
S. 1ST STREET STA 16+00 TO 20+50

TITLE

#	DATE	DESCRIPTION

REVISIONS

DATUM

OTAK CAD KJB
DRAWN BY CHECKED BY

90% DESIGN
STATUS

JANUARY 10, 2022
DATE

19823
PROJECT NUMBER

SA-2

© 2021 OTAK, INC.

If this drawing is not 22" x 34", it has been reduced/enlarged. Scale accordingly.

Plotted: Jan 10, 2022 - 3:57pm Nathan G:\Shared drives\Grading\Projects\2105A 1st and Strand Utility Improvements\500 CAD\501 Plan Sheets\2105A SS PAP SHEETS.dwg Layout Name: SA-2 S. 1ST STREET STA 16+00 TO 20+50

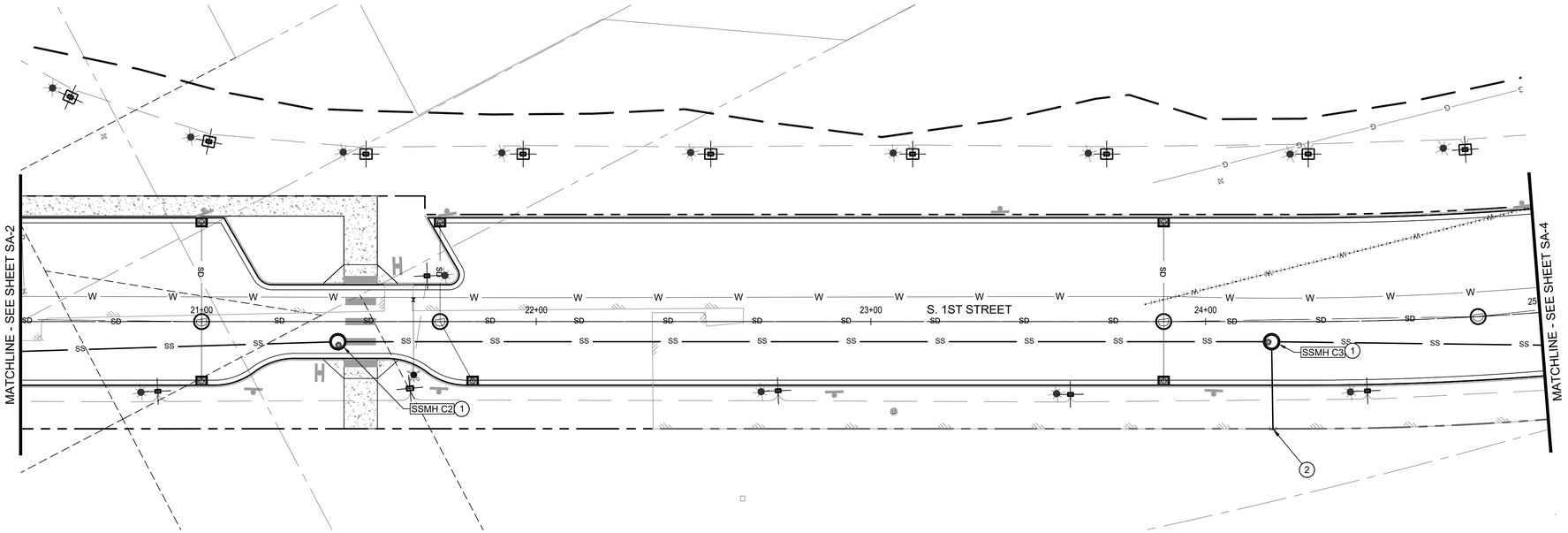

S. 1ST STREET STA 20+50 TO 25+00

0 20 40
SCALE IN FEET

SEWER CONSTRUCTION KEY NOTES

1. CONSTRUCT MANHOLE PER CITY OF ST. HELENS STD DETAIL 350, SHEET 2B-3. SEE PROFILE FOR SIZE, RIM, AND INVERT INFORMATION.
2. CONSTRUCT NEW SEWER MAIN TO EDGE OF RIGHT-OF-WAY WITH TEMPORARY PLUG.

MANHOLE COORDINATES TABLE

SSMH ID	NORTHING	EASTING
C2	587905.71	603921.47
C3	588180.04	603972.40

NEW LATERAL TABLE

MAIN STA, OF TEE	APPROX, LENGTH	SLOPE	INV, ELEV, @END
24+20	24'	2.00%	18.42

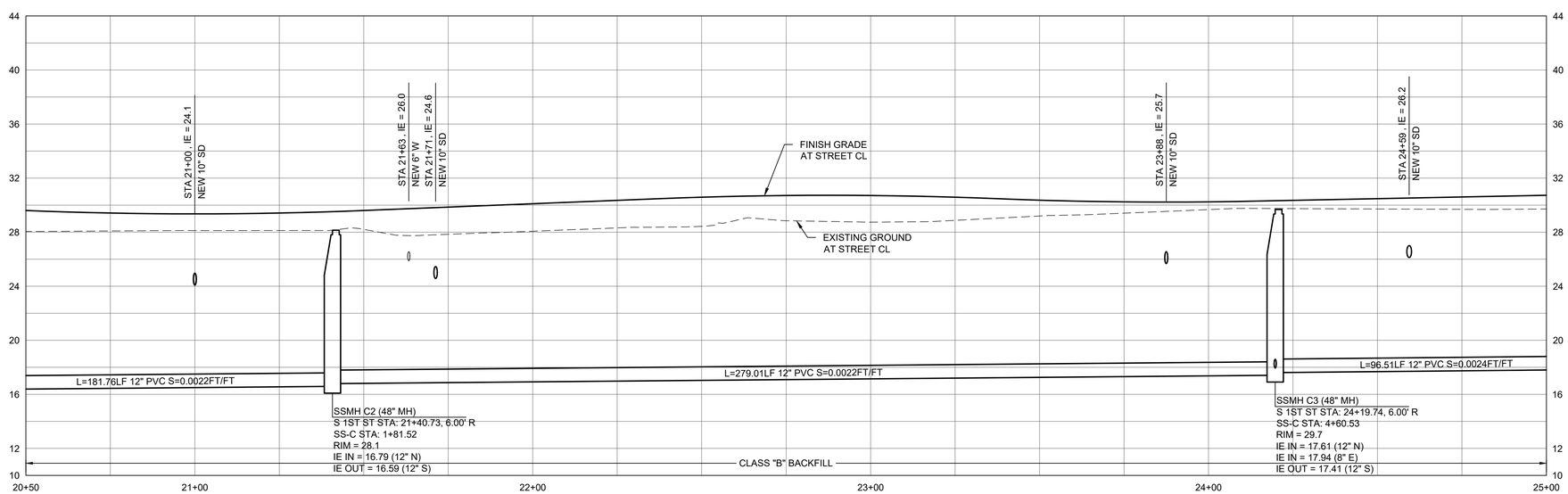

S. 1ST STREET STA 20+50 TO 25+00

HORZ 0 20 40
VERT 0 5 10
SCALE IN FEET

PRELIMINARY

LEEWAY engineering solutions

S. 1ST AND STRAND STREETS ROAD AND UTILITY EXTENSIONS

ST. HELENS, OREGON
SANITARY SEWER PLAN & PROFILE

S. 1ST STREET STA 20+50 TO 25+00

TITLE

#	DATE	DESCRIPTION

REVISIONS

DATUM

OTAK CAD KJB
DRAWN BY CHECKED BY

90% DESIGN
STATUS

JANUARY 10, 2022
DATE

19823
PROJECT NUMBER

SA-3

© 2021 OTAK, INC.

If this drawing is not 22" x 34", it has been reduced/enlarged. Scale accordingly.

Plotted: Jan 10, 2022 - 3:37pm Nathan G:\Shared drives\Grading\Projects\2105A 1st and Strand Utility Improvements\500 CAD\501 Plan Sheets\2105A SS P&P SHEETS.dwg Layout Name: SA-3 S. 1ST STREET STA 20+50 TO 25+00

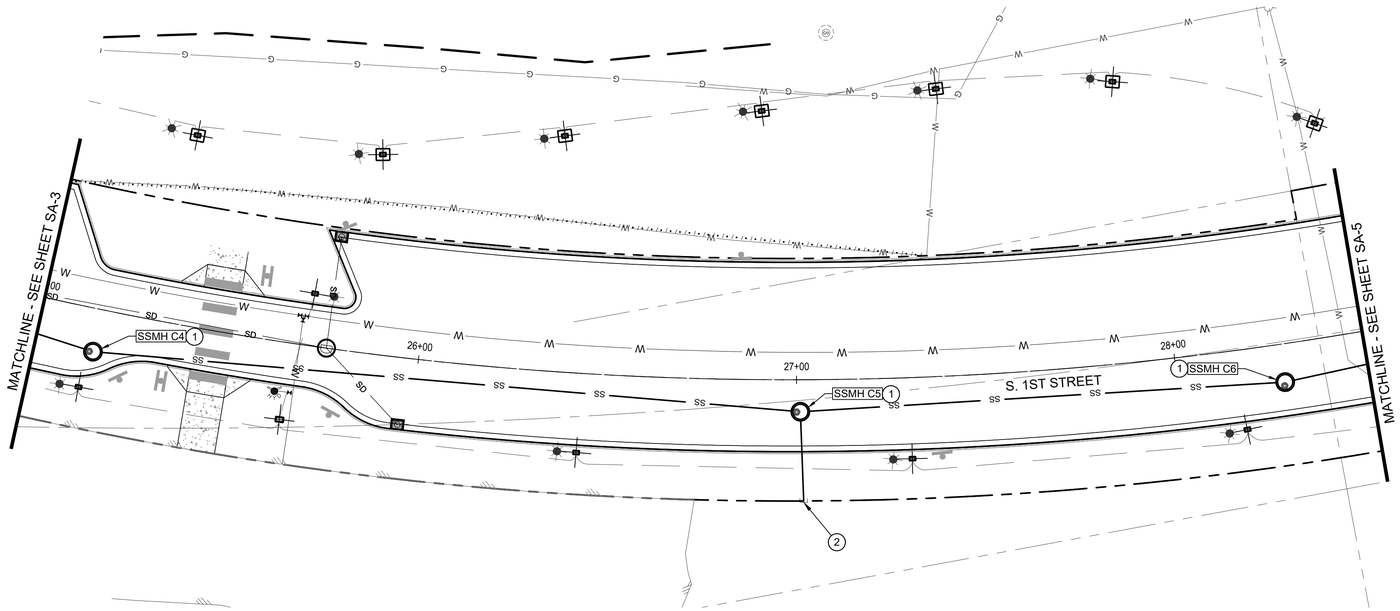

S. 1ST STREET STA 25+00 TO 28+50

0 20 40
SCALE IN FEET

SEWER CONSTRUCTION KEY NOTES

1. CONSTRUCT MANHOLE PER CITY OF ST. HELENS STD DETAIL 350, SHEET 2B-3. SEE PROFILE FOR SIZE, RIM, AND INVERT INFORMATION.
2. CONSTRUCT NEW SEWER MAIN TO EDGE OF RIGHT-OF-WAY WITH TEMPORARY PLUG.

MANHOLE COORDINATES TABLE

SSMH ID	NORTHING	EASTING
C4	588284.05	603991.92
C5	588461.99	603986.01
C6	588588.24	603963.71

NEW LATERAL TABLE

MAIN STA, OF TEE	APPROX, LENGTH	SLOPE	INV, ELEV, @END
27+01	21'	2.00%	19.39

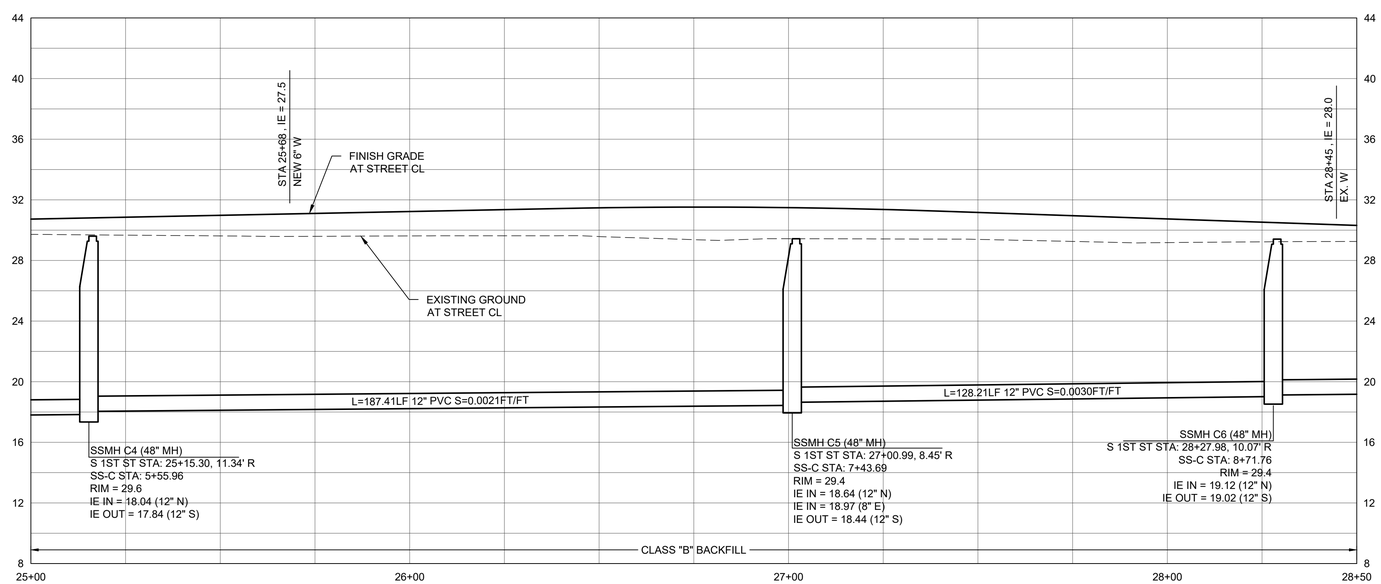

S. 1ST STREET STA 25+00 TO 28+50

HORZ 0 20 40
VERT 0 5 10
SCALE IN FEET

PRELIMINARY

LEEWAY engineering solutions

S. 1ST AND STRAND STREETS ROAD AND UTILITY EXTENSIONS
ST. HELENS, OREGON
SANITARY SEWER PLAN & PROFILE
S. 1ST STREET STA 25+00 TO 28+50

TITLE

#	DATE	DESCRIPTION

REVISIONS

DATUM

OTAK CAD — KJB
DRAWN BY — CHECKED BY

90% DESIGN
STATUS

JANUARY 10, 2022
DATE

19823
PROJECT NUMBER

SA-4

© 2021 OTAK, INC.

If this drawing is not 22" x 34", it has been reduced/enlarged. Scale accordingly.

Plotted: Jan 10, 2022 - 3:58pm Nathan G:\Shared drives\Grading\Projects\2105A 1st and Strand Utility Improvements\500 CAD\501 Plan Sheets\2105A SS PAP SHEETS.dwg Layout Name: SA-4 S. 1ST STREET STA 25+00 TO 28+50

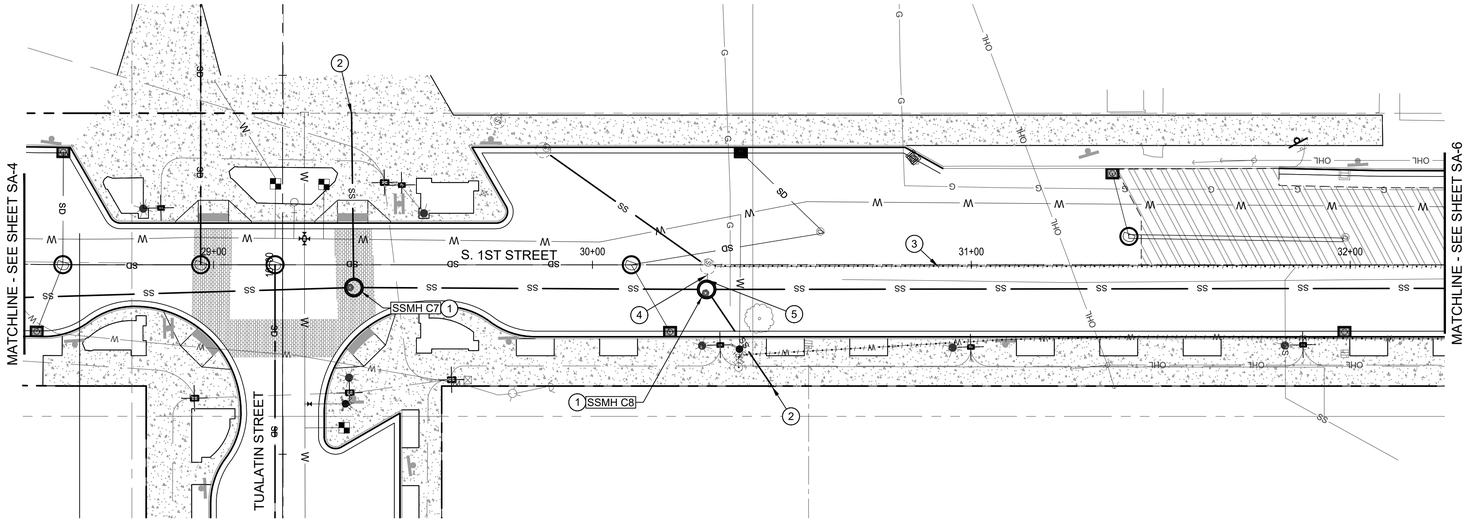

S. 1ST STREET STA 28+50 TO 32+25

0 20 40
SCALE IN FEET

SEWER CONSTRUCTION KEY NOTES

1. CONSTRUCT MANHOLE PER CITY OF ST. HELENS STD DETAIL 350, SHEET 2B-3. SEE PROFILE FOR SIZE, RIM, AND INVERT INFORMATION.
2. CONSTRUCT NEW SEWER MAIN TO EDGE OF RIGHT-OF-WAY WITH TEMPORARY PLUG.
3. ABANDON PIPE PER SECTION 00490 OF THE OREGON STANDARD SPECIFICATIONS FOR CONSTRUCTION
4. CONSTRUCT 12" PVC SEWER TO CONNECT THE EXISTING MANHOLE TO THE PROPOSED MANHOLE WITH CLASS "B" BACKFILL
5. CONSTRUCT 8" INSIDE DROP PER CITY OF ST. HELENS STD DETAIL 354

MANHOLE COORDINATES TABLE

SSMH ID	NORTHING	EASTING
C7	588691.85	603928.34
C8	588780.99	603901.42

NEW LATERAL TABLE

MAIN STA, OF TEE	APPROX, LENGTH	SLOPE	INV, ELEV, @END
29+37	44'	2.00%	20.77
30+30	29'	2.00%	20.88

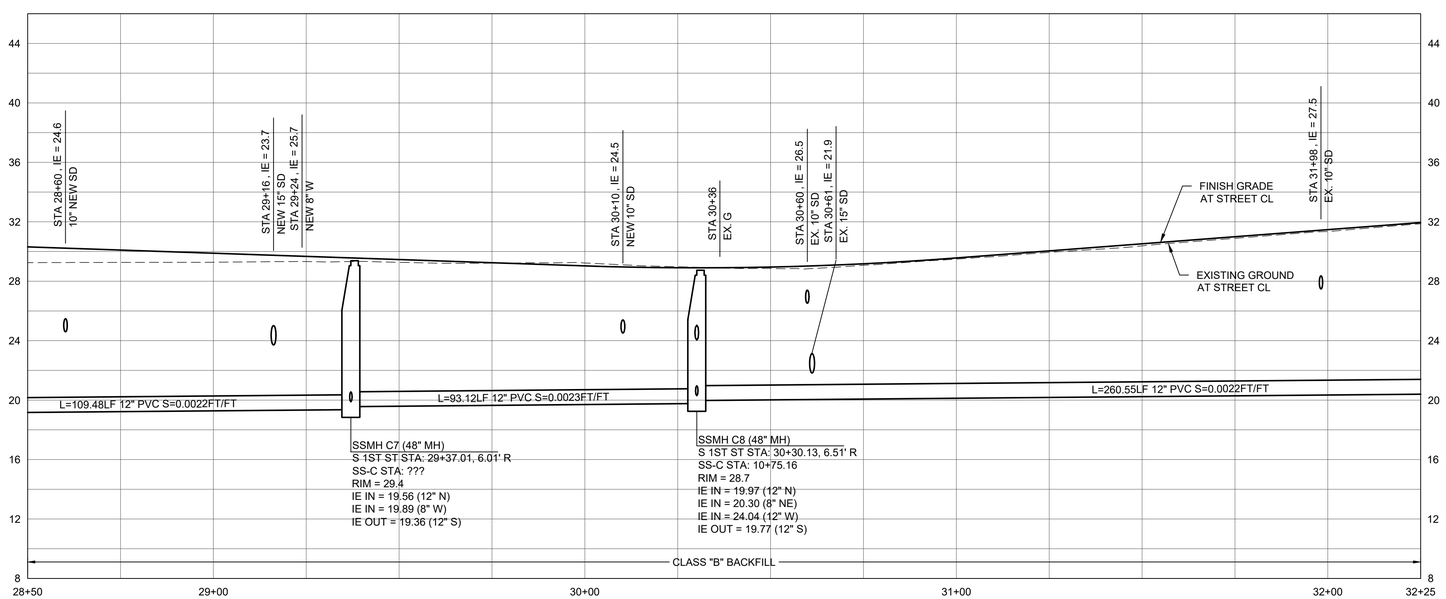

S. 1ST STREET STA 28+50 TO 32+25

HORZ 0 20 40
VERT 0 5 10
SCALE IN FEET

PRELIMINARY

LEEWAY engineering solutions

S. 1ST AND STRAND STREETS ROAD AND UTILITY EXTENSIONS

ST. HELENS, OREGON
SANITARY SEWER PLAN & PROFILE

S. 1ST STREET STA 28+50 TO 32+25

TITLE

#	DATE	DESCRIPTION

REVISIONS

DATUM

OTAK CAD — KJB
DRAWN BY — CHECKED BY

90% DESIGN
STATUS

JANUARY 10, 2022
DATE

19823
PROJECT NUMBER

SA-5

© 2021 OTAK, INC.

If this drawing is not 22" x 34", it has been reduced/enlarged. Scale accordingly.

Plotted: Jan 10, 2022 - 3:58pm Nathan G:\Shared drives\Grading\Projects\2105A 1st and Strand Utility Improvements\500 CAD\501 Plan Sheets\2105A SS P&P SHEETS.dwg Layout Name: SA-5 S. 1ST STREET STA 28+50 TO 32+25

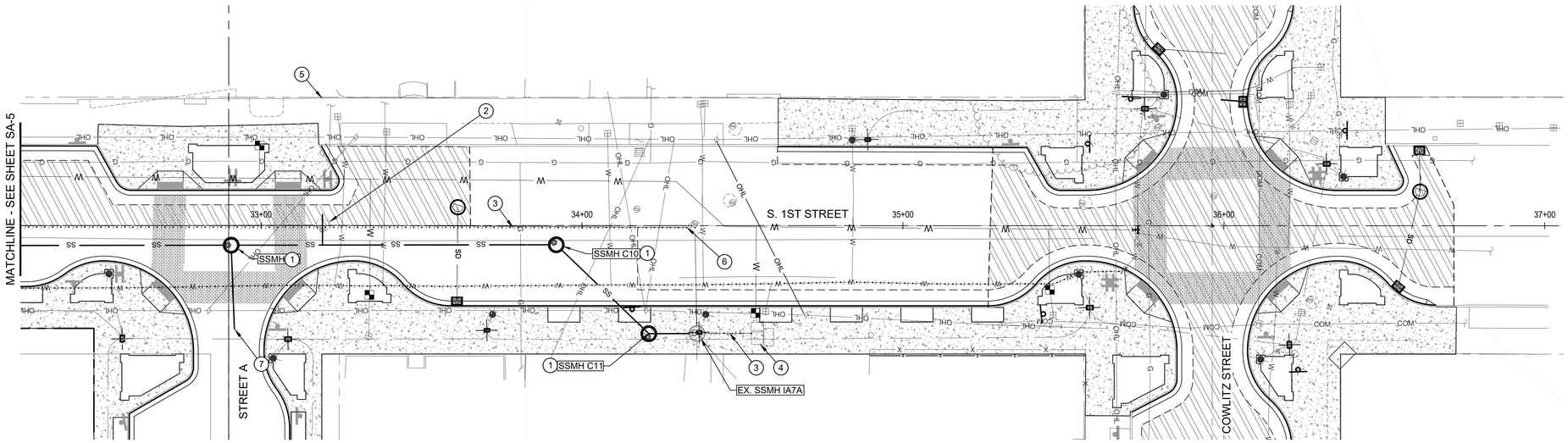

SEWER CONSTRUCTION KEY NOTES

1. CONSTRUCT MANHOLE PER CITY OF ST. HELENS STD DETAIL 350, SHEET 2B-3. SEE PROFILE FOR SIZE, RIM, AND INVERT INFORMATION.
2. REMOVE EXISTING MANHOLE PER SECTION 00490 OF THE OREGON STANDARD SPECIFICATIONS FOR CONSTRUCTION
3. ABANDON PIPE
4. DECOMMISSION EXISTING PUMP STATION, SEE DETAIL SHEET SA-9
5. CONSTRUCT NEW SERVICE LATERAL TO CONNECT TO THE EXISTING SERVICE LATERAL
6. CONSTRUCT CONCRETE PLUG
7. CONSTRUCT NEW SEWER MAIN TO EDGE OF INTERSECTION

MANHOLE COORDINATES TABLE

SSMH ID	NORTHING	EASTING
C9	589025.36	603825.78
C10	589126.66	603794.41
C11	589162.37	603812.39

S. 1ST STREET STA 33+50 TO 37+00

0 20 40
SCALE IN FEET

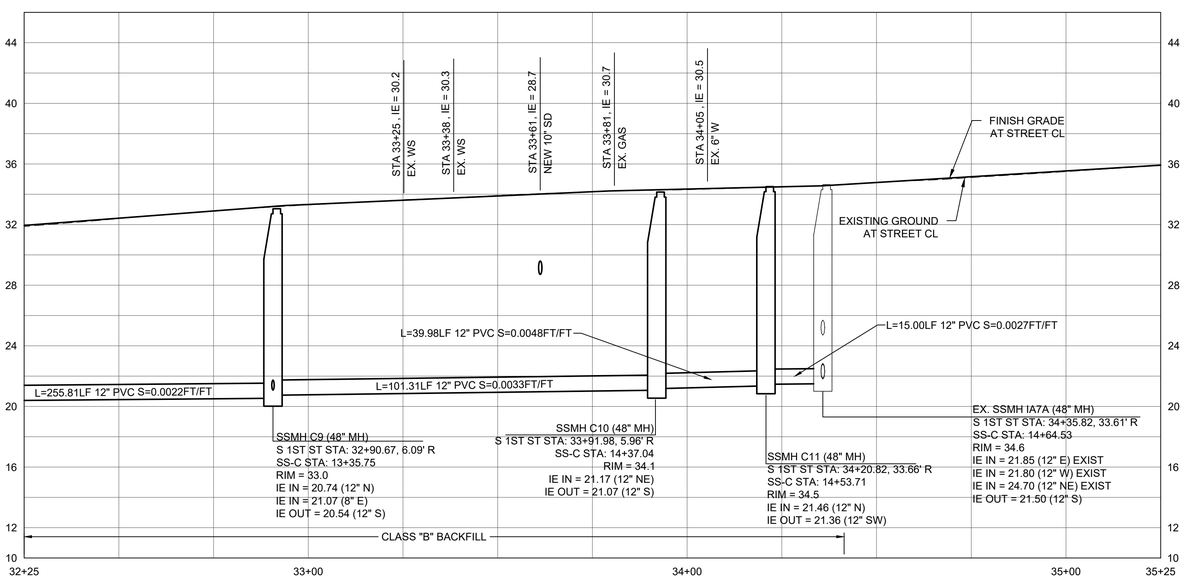

S. 1ST STREET STA 33+50 TO 37+00

HORZ 0 20 40
VERT 0 5 10
SCALE IN FEET

PRELIMINARY

LEEWAY engineering solutions

S. 1ST AND STRAND STREETS ROAD AND UTILITY EXTENSIONS

ST. HELENS, OREGON
SANITARY SEWER PLAN & PROFILE

S. 1ST STREET STA 32+50 TO 36+75

TITLE

#	DATE	DESCRIPTION

REVISIONS

DATUM

OTAK CAD — KJB
DRAWN BY — CHECKED BY

90% DESIGN
STATUS

JANUARY 10, 2022
DATE

19823
PROJECT NUMBER

SA-6

© 2021 OTAK, INC.

If this drawing is not 22" x 34", it has been reduced/enlarged. Scale accordingly.

Plotted: Jan 10, 2022 - 3:58pm Nathan G:\Shared drives\Grading\Projects\2105A 1st and Strand Utility Improvements\500-CAD\501 Plan Sheets\2105A SS PAP SHEETS.dwg Layout Name: SA4 S. 1ST STREET STA 32+50 TO 36+75

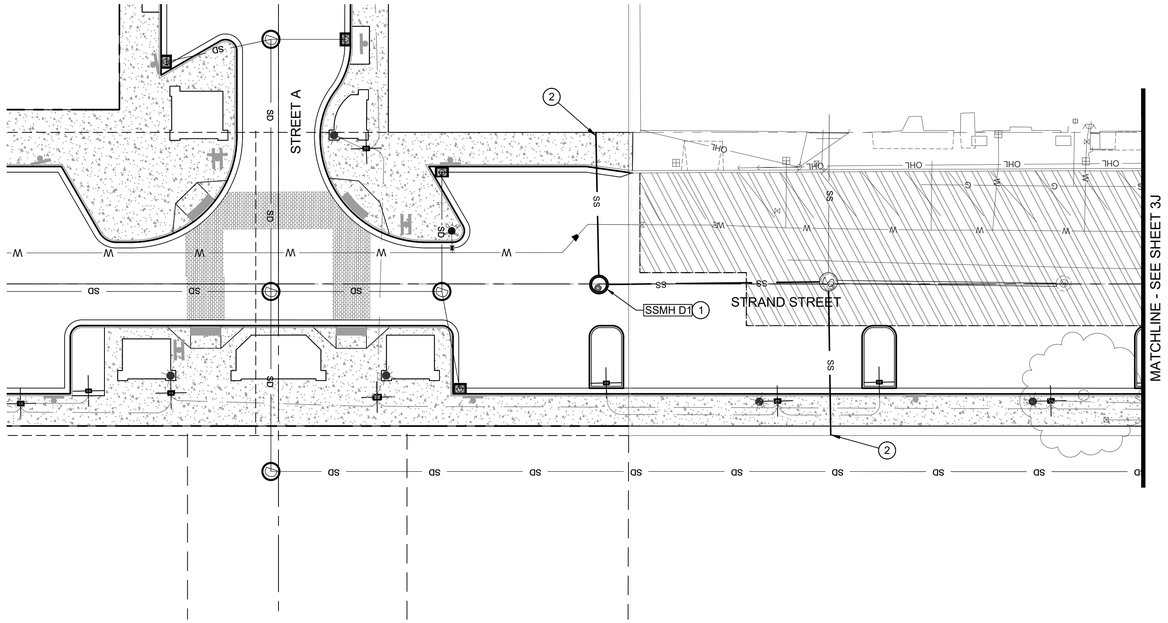

STRAND STREET STA 13+00 TO 16+00

0 20 40
SCALE IN FEET

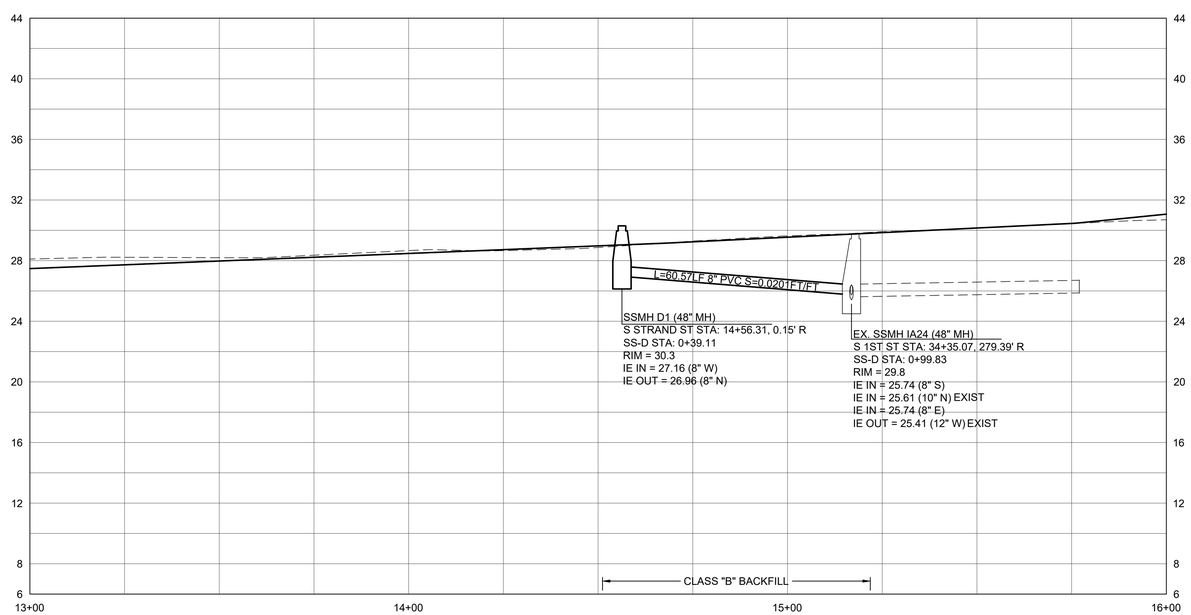

STRAND STREET STA 13+00 TO 16+00

HORZ 0 20 40
VERT 0 5 10
SCALE IN FEET

SEWER CONSTRUCTION KEY NOTES

1. CONSTRUCT MANHOLE PER CITY OF ST HELENS STD DETAIL 350, SHEET 2B-3. SEE PROFILE FOR SIZE, RIM, AND INVERT INFORMATION.
2. CONSTRUCT NEW SERVICE LATERAL TO PROPERTY LINE WITH TEMPORARY PLUG

MANHOLE COORDINATES TABLE

SSMH ID	NORTHING	EASTING
D1	589190.64	604061.56

NEW LATERAL TABLE

MAIN STA, OF MH	APPROX, LENGTH	SLOPE	INV, ELEV, @END
14+56	40'	2.00%	27.97
30+30	40'	2.00%	26.55

PRELIMINARY

LEEWAY engineering solutions

S. 1ST AND STRAND STREETS ROAD AND UTILITY EXTENSIONS
ST. HELENS, OREGON
SANITARY SEWER PLAN & PROFILE
STRAND ST STA 13+00 TO 16+00

TITLE

#	DATE	DESCRIPTION

REVISIONS

DATUM

DRAWN BY: OTAK CAD — CHECKED BY: KJB

STATUS: 90% DESIGN

DATE: JANUARY 10, 2022

PROJECT NUMBER: 19823

SA-7

© 2021 OTAK, INC.

If this drawing is not 22" x 34", it has been reduced/enlarged. Scale accordingly.

Plotted: Jan 10, 2022 - 3:58pm Nathan G:\Shared drives\Grading\Projects\2105A 1st and Strand Utility Improvements\500 CAD\501 Plan Sheets\2105A SS P&P SHEETS.dwg Layout Name: SA-7 STRAND ST STA 13+00 TO 16+00

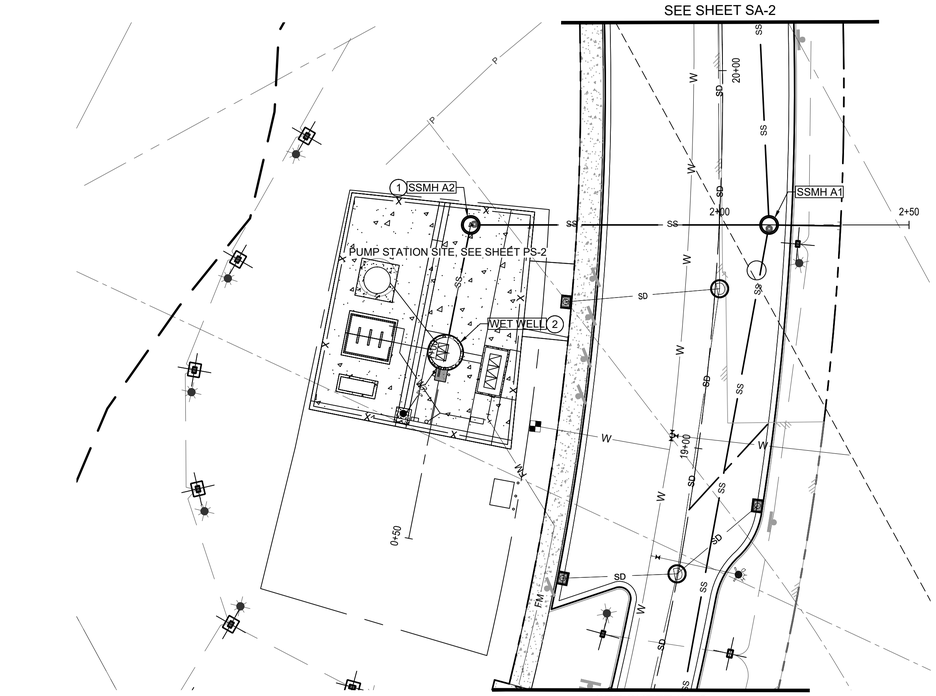

S. 1ST STREET STA 16+00 TO 20+50

0 20 40
SCALE IN FEET

SEWER CONSTRUCTION KEY NOTES

1. CONSTRUCT MANHOLE PER CITY OF ST. HELENS STD DETAIL 350, SHEET 2B-3. SEE PROFILE FOR SIZE, RIM, AND INVERT INFORMATION.
2. CONSTRUCT WET WELL, SEE SHEET PS-3

MANHOLE COORDINATES TABLE

SSMH ID	NORTHING	EASTING
A2	587741.84	603816.44

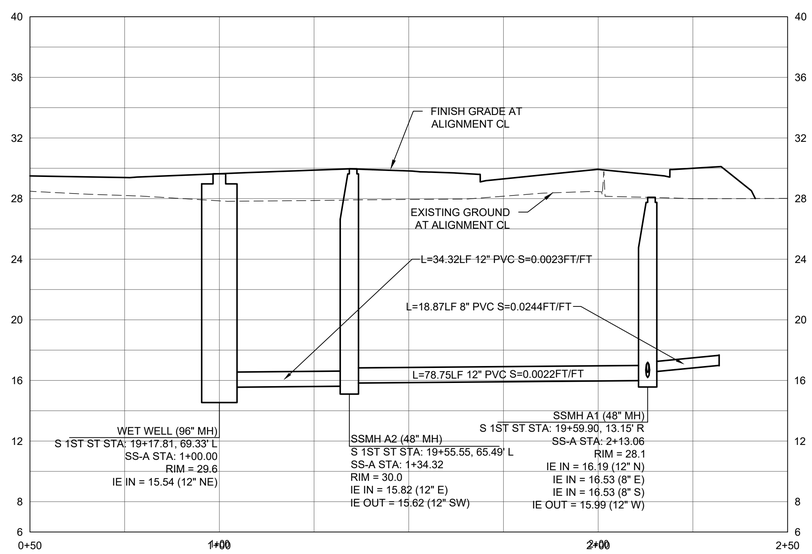

SA-A ALIGNMENT 0+00 TO 2+50

HORZ 0 20 40
VERT 0 5 10
SCALE IN FEET

PRELIMINARY

LEEWAY engineering solutions

S. 1ST AND STRAND STREETS ROAD AND UTILITY EXTENSIONS

ST. HELENS, OREGON
SANITARY SEWER PLAN & PROFILE

SA ALIGNMENT 0+50 TO 2+50

TITLE

#	DATE	DESCRIPTION

REVISIONS

DATUM

OTAK CAD — DRAWN BY
KJB — CHECKED BY

90% DESIGN
STATUS

JANUARY 10, 2022
DATE

19823
PROJECT NUMBER

SA-8

© 2021 OTAK, INC.

If this drawing is not 22" x 34", it has been reduced/enlarged. Scale accordingly.

Plotted: Jan 10, 2022 - 3:58pm Nathan G:\Shared drives\Grading\Projects\21054_1st and Strand Utility Improvements\500 CAD\501 Plan Sheets\21054 SS P&P SHEETS.dwg Layout Name: SA-8 SA ALIGNMENT 0+50 TO 2+50

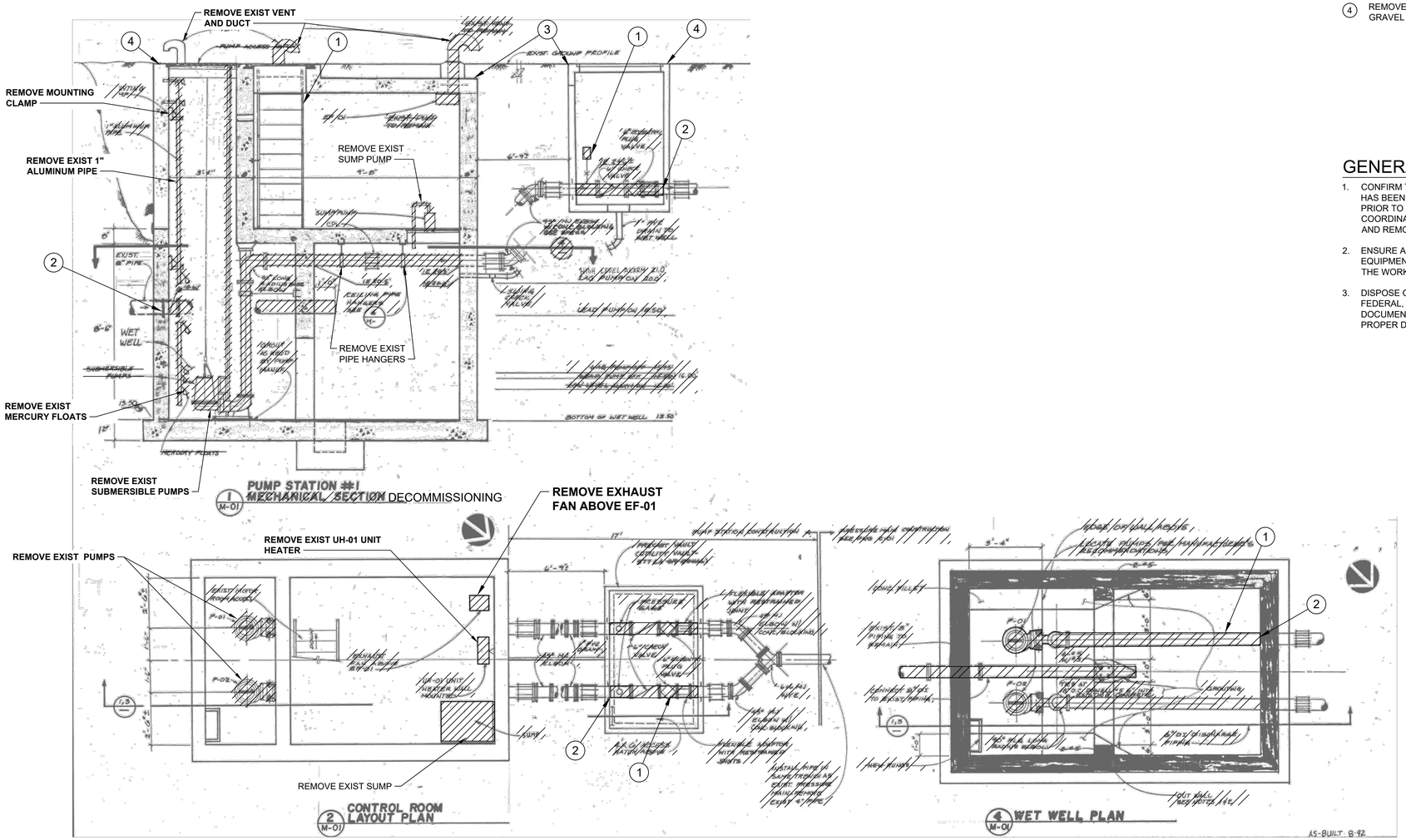

1 # EXISTING PUMP STATION DEMOLITION

SCALE: NTS

DEMOLITION KEY NOTES

1. REMOVE FOR DISPOSAL CHAINS AND RAILS, PIPING, ELECTRICAL WIRING, CONTROL DEVICES, AND MERCURY SWITCHES. CUT AND REMOVE PIPING TO FLUSH w/ WALL.
2. POUR CONCRETE PLUG, GROUTING, OR MECHANICAL CAP AS APPROVED BY ENGINEER AT ALL PIPE PENETRATIONS INTO STRUCTURES, INCLUDING SEWER AND FORCE MAIN.
3. REMOVE ANY REMAINING STRUCTURES AND APPURTENANCES TO A DEPTH OF 2 FEET AND BACKFILL PER SPECIFICATIONS.
4. REMOVE CONCRETE PAVEMENT WITHIN EXTENTS. FINISH SURFACE w/ GRAVEL TO A DEPTH OF 6". MATCH EXISTING GRADE.

GENERAL NOTE:

1. CONFIRM THAT GRAVITY SERVICE AND THE NEW PUMP STATION HAS BEEN PLACED INTO OPERATION AND TESTED/ INSPECTED PRIOR TO COMMENCING DEMOLITION ACTIVITIES AND COORDINATE WITH ELECTRICITY PROVIDER TO DISCONNECT AND REMOVE ALL POWER SERVICE FACILITIES.
2. ENSURE APPROPRIATE REGULATORY REQUIRED SAFETY EQUIPMENT AND PROCEDURES ARE IN PLACE FOR CONDUCTING THE WORK.
3. DISPOSE OF MATERIALS AND EQUIPMENT IN ACCORDANCE WITH FEDERAL, STATE, AND LOCAL REGULATIONS. PROVIDE CITY w/ DOCUMENTATION (MANIFESTS, BILLS OF LADING) EVIDENCING PROPER DISPOSAL.

City of St. Helens FOUNDED 1850

PRELIMINARY

LEEWAY engineering solutions

S. 1ST AND STRAND STREETS ROAD AND UTILITY EXTENSIONS

ST. HELENS, OREGON
SANITARY SEWER DETAILS

EXISTING PUMP STATION DEMOLITION

TITLE

#	DATE	DESCRIPTION

REVISIONS

DATUM

OTAK CAD — KJB
DRAWN BY — CHECKED BY

90% DESIGN
STATUS

JANUARY 10, 2022
DATE

19823
PROJECT NUMBER

SA-9

© 2021 OTAK, INC.

If this drawing is not 22" x 34", it has been reduced/enlarged. Scale accordingly.

Plotted: Jan 10, 2022 - 3:55pm Nathan G:\Shared drives\Grayling\Projects\2105A 1st and Strand Utility Improvements\500 CAD\501 Plan Sheets\2105A DEMO SHEETS.dwg Layout Name: SA-9 EXISTING PUMP STATION DEMOLITION

EROSION AND SEDIMENT CONTROL PLANS

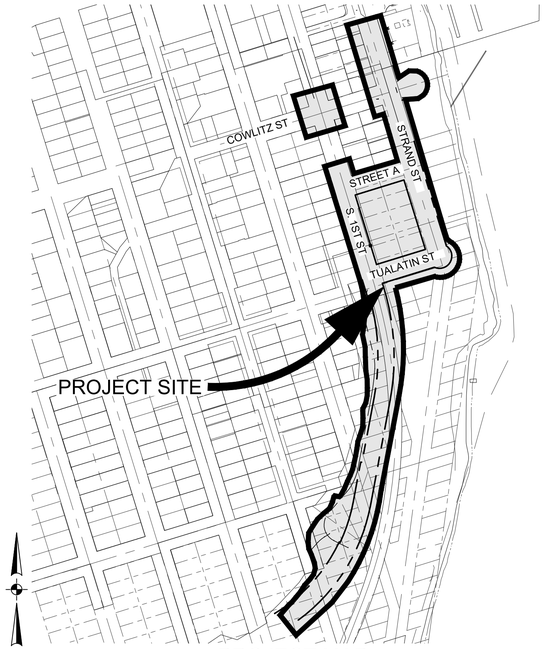

PROJECT MAP

N.T.S.

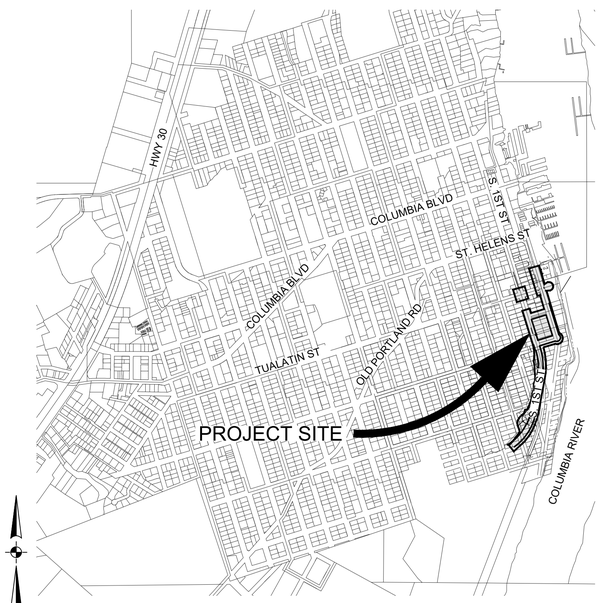

VICINITY MAP

N.T.S.

PROJECT LOCATION:

NEAR S. 1ST STREET AND COWLITZ STREET
ST. HELENS, OREGON
LATITUDE =45°51'34"N,
LONGITUDE =122°47'48"W

PROPERTY DESCRIPTION:

WILLAMETTE MERIDIAN, COLUMBIA
COUNTY, OREGON
T4N R1W SEC 3 TL 100, S. 1ST STREET,
COWLITZ STREET, STRAND STREET R/W

ATTENTION EXCAVATORS:

OREGON LAW REQUIRES YOU TO FOLLOW RULES ADOPTED BY THE OREGON UTILITY NOTIFICATION CENTER. THOSE RULES ARE SET FORTH IN OAR 952-001-0010 THROUGH OAR 952-001-0090. YOU MAY OBTAIN COPIES OF THESE RULES FROM THE CENTER BY CALLING 503-232-1987. IF YOU HAVE ANY QUESTIONS ABOUT THE RULES, YOU MAY CONTACT THE CENTER. YOU MUST NOTIFY THE CENTER AT LEAST TWO BUSINESS DAYS, BEFORE COMMENCING AN EXCAVATION. CALL 503-246-6699.

OWNER

NAME:	CITY OF ST. HELENS
CONTACT:	MOUHAMAD ZAHER, PE
ADDRESS:	265 STRAND STREET
	ST. HELENS, OR 97051
PHONE:	(503) 366-8223
FAX:	

ENGINEERING FIRM

NAME:	OTAK INC.
ENGINEER:	KEITH BUISMAN, P.E.
ADDRESS:	808 SW THIRD AVENUE, SUITE 800
	PORTLAND, OR 97204
PHONE:	(503) 287-6825
FAX:	503-415-2304

NARRATIVE DESCRIPTIONS

EXISTING SITE CONDITIONS
* VACANT INDUSTRIAL SITE

DEVELOPED CONDITIONS
* NEW STREET/UTILITY INFRASTRUCTURE INCLUDING PUMP STATION

NATURE OF CONSTRUCTION ACTIVITY AND ESTIMATED TIME TABLE
* CLEARING (MAY 2022)
* MASS GRADING (MAY-JULY 2022)
* UTILITY INSTALLATION (AUGUST-DECEMBER 2022)
* STREET CONSTRUCTION (JANUARY-MARCH 2023)
* FINAL STABILIZATION (APRIL-MAY 2023)

TOTAL SITE AREA = ___._ ACRES
TOTAL DISTURBED AREA = __.__ ACRES

SITE SOIL CLASSIFICATION:
45 - ROCK OUTCROP-XERUMBREPTS COMPLEX, UNDULATING
46 - SAUVIE SILT LOAM

ON-SITE SOILS HAVE A SLIGHT EROSION POTENTIAL. ALL FILL MATERIAL SHALL BE GENERATED ON-SITE FROM GRADING EXCAVATION AND UTILITY TRENCH SPOILS.

RECEIVING WATER BODIES:
COLUMBIA RIVER

PERMITTEE'S SITE INSPECTOR:

NAME: HAILEY SIBERT
COMPANY/AGENCY: OTAK, INC
PHONE: 503-853-9547
FAX: 503-415-2304
E-MAIL: HAILEY.SIBERT@OTAK.COM
CERTIFICATION ID: CESCL ID# - ECO-3-8101809 (Exp. __/__/____)
DESCRIPTION OF EXPERIENCE:
1 YEAR FIELD EXPERIENCE AS EROSION CONTROL AND CONSTRUCTION INPSECTOR.

INSPECTION FREQUENCY:

SITE CONDITION	MINIMUM FREQUENCY
1. ACTIVE PERIOD	-ON THE INITIAL DATE THAT LAND DISTURBANCE ACTIVITIES COMMENCE. -WITHIN 24 HOURS OF ANY STORM EVENT, INCLUDING RUNOFF FROM SNOW MELT, THAT RESULTS IN DISCHARGE FROM THE SITE. -AT LEAST ONCE EVERY 14 DAYS, REGARDLESS OF WHETHER STROMWATER RUNOFF IS OCCURRING.
2. INACTIVE PERIODS GREATER THAN 14 CONSECUTIVE CALENDAR DAYS.	THE INSPECTOR MAY REDUCE THE FREQUENCY OF INSPECTIONS IN ANY AREA OF THE SITE WHERE THE STABILIZATION STEPS IN SECTION 2.2.20 HAVE BEEN COMPLETED TO TWICE PER MONTH FOR THE FIRST MONTH, NO LESS THAN 14 CALENDAR DAYS APART, THEN ONCE PER MONTH
3. PERIODS DURING WHICH THE SITE IS INACCESSIBLE DUE TO INCLEMENT WEATHER.	IF SAFE, ACCESSIBLE AND PRACTICAL, INSPECTIONS MUST OCCUR DAILY AT A RELEVANT DISCHARGE POINT OR DOWNSTREAM LOCATION OF THE RECEIVING WATERBODY.
4. PERIODS DURING WHICH CONSTRUCTION ACTIVITIES ARE SUSPENDED AND RUNOFF IS UNLIKELY DUE TO FROZEN CONDITIONS.	VISUAL MONITORING INSPECTIONS MAY BE TEMPORARILY SUSPENDED. IMMEDIATELY RESUME MONITORING UPON THAWING, OR WHEN WEATHER CONDITIONS MAKE DISCHARGES LIKELY.
5. PERIODS DURING WHICH CONSTRUCTION ACTIVITIES ARE CONDUCTED AND RUNOFF IS UNLIKELY DURING FROZEN CONDITIONS.	VISUAL MONITORING INSPECTIONS MAY BE REDUCED TO ONCE A MONTH. IMMEDIATELY RESUME MONITORING UPON THAWING, OR WHEN WEATHER CONDITIONS MAKE DISCHARGES LIKELY.

STANDARD EROSION AND SEDIMENT CONTROL PLAN DRAWING NOTES:

1. ONCE KNOWN, INCLUDE A LIST OF ALL CONTRACTORS THAT WILL ENGAGE IN CONSTRUCTION ACTIVITIES ON SITE, AND THE AREAS OF THE SITE WHERE THE CONTRACTOR(S) WILL ENGAGE IN CONSTRUCTION ACTIVITIES. REVISE THE LIST AS APPROPRIATE UNTIL PERMIT COVERAGE IS TERMINATED (SECTION 4.4.C.I). IN ADDITION, INCLUDE A LIST OF ALL PERSONNEL (BY NAME AND POSITION) THAT ARE RESPONSIBLE FOR THE DESIGN, INSTALLATION AND MAINTENANCE OF STORMWATER CONTROL MEASURES (E.G. ESCP DEVELOPER, BMP INSTALLER (SEE SECTION 4.10), AS WELL AS THEIR INDIVIDUAL RESPONSIBILITIES. (SECTION 4.4.C.II)
2. VISUAL MONITORING INSPECTION REPORTS MUST BE MADE IN ACCORDANCE WITH DEQ 1200-C PERMIT REQUIREMENTS. (SECTION 6.5)
3. INSPECTION LOGS MUST BE KEPT IN ACCORDANCE WITH DEQ'S 1200-C PERMIT REQUIREMENTS. (SECTION 6.5.Q)
4. RETAIN A COPY OF THE ESCP AND ALL REVISIONS ON SITE AND MAKE IT AVAILABLE ON REQUEST TO DEQ, AGENT, OR THE LOCAL MUNICIPALITY. (SECTION 4.7)
5. THE PERMIT REGISTRANT MUST IMPLEMENT THE ESCP. FAILURE TO IMPLEMENT ANY OF THE CONTROL MEASURES OR PRACTICES DESCRIBED IN THE ESCP IS A VIOLATION OF THE PERMIT. (SECTIONS 4 AND 4.11)
6. THE ESCP MUST BE ACCURATE AND REFLECT SITE CONDITIONS. (SECTION 4.8)
7. SUBMISSION OF ALL ESCP REVISIONS IS NOT REQUIRED. SUBMITTAL OF THE ESCP REVISIONS IS ONLY UNDER SPECIFIC CONDITIONS. SUBMIT ALL NECESSARY REVISION TO DEQ OR AGENT WITHIN 10 DAYS. (SECTION 4.9)
8. SEQUENCE CLEARING AND GRADING TO THE MAXIMUM EXTENT PRACTICAL TO PREVENT EXPOSED INACTIVE AREAS FROM BECOMING A SOURCE OF EROSION. (SECTION 2.2.2)
9. CREATE SMOOTH SURFACES BETWEEN SOIL SURFACE AND EROSION AND SEDIMENT CONTROLS TO PREVENT STORMWATER FROM BYPASSING CONTROLS AND PONDING. (SECTION 2.2.3)
10. IDENTIFY, MARK, AND PROTECT (BY CONSTRUCTION FENCING OR OTHER MEANS) CRITICAL RIPARIAN AREAS AND VEGETATION INCLUDING IMPORTANT TREES AND ASSOCIATED ROOTING ZONES, AND VEGETATION AREAS TO BE PRESERVED. IDENTIFY VEGETATIVE BUFFER ZONES BETWEEN THE SITE AND SENSITIVE AREAS (E.G., WETLANDS), AND OTHER AREAS TO BE PRESERVED, ESPECIALLY IN PERIMETER AREAS. (SECTION 2.2.1)
11. PRESERVE EXISTING VEGETATION WHEN PRACTICAL AND RE-VEGETATE OPEN AREAS. RE-VEGETATE OPEN AREAS WHEN PRACTICABLE BEFORE AND AFTER GRADING OR CONSTRUCTION. IDENTIFY THE TYPE OF VEGETATIVE SEED MIX USED. (SECTION 2.2.5)
12. MAINTAIN AND DELINEATE ANY EXISTING NATURAL BUFFER WITHIN THE 50-FEET OF WATERS OF THE STATE. (SECTION 2.2.4)
13. INSTALL PERIMETER SEDIMENT CONTROL, INCLUDING STORM DRAIN INLET PROTECTION AS WELL AS ALL SEDIMENT BASINS, TRAPS, AND BARRIERS PRIOR TO LAND DISTURBANCE. (SECTIONS 2.1.3)
14. CONTROL BOTH PEAK FLOW RATES AND TOTAL STORMWATER VOLUME, TO MINIMIZE EROSION AT OUTLETS AND DOWNSTREAM CHANNELS AND STREAMBANKS. (SECTIONS 2.1.1. AND 2.2.16)
15. CONTROL SEDIMENT AS NEEDED ALONG THE SITE PERIMETER AND AT ALL OPERATIONAL INTERNAL STORM DRAIN INLETS AT ALL TIMES DURING CONSTRUCTION, BOTH INTERNALLY AND AT THE SITE BOUNDARY. (SECTIONS 2.2.6 AND 2.2.13)
16. ESTABLISH CONCRETE TRUCK AND OTHER CONCRETE EQUIPMENT WASHOUT AREAS BEFORE BEGINNING CONCRETE WORK. (SECTION 2.2.14)
17. APPLY TEMPORARY AND/OR PERMANENT SOIL STABILIZATION MEASURES IMMEDIATELY ON ALL DISTURBED AREAS AS GRADING PROGRESSES. TEMPORARY OR PERMANENT STABILIZATIONS MEASURES ARE NOT REQUIRED FOR AREAS THAT ARE INTENDED TO BE LEFT UNVEGETATED, SUCH AS DIRT ACCESS ROADS OR UTILITY POLE PADS.(SECTIONS 2.2.20 AND 2.2.21)
18. ESTABLISH MATERIAL AND WASTE STORAGE AREAS, AND OTHER NON-STORMWATER CONTROLS. (SECTION 2.3.7)
19. KEEP WASTE CONTAINER LIDS CLOSED WHEN NOT IN USE AND CLOSE LIDS AT THE END OF THE BUSINESS DAY FOR THOSE CONTAINERS THAT ARE ACTIVELY USED THROUGHOUT THE DAY. FOR WASTE CONTAINERS THAT DO NOT HAVE LIDS, PROVIDE EITHER (1) COVER (E.G., A TARP, PLASTIC SHEETING, TEMPORARY ROOF) TO PREVENT EXPOSURE OF WASTES TO PRECIPITATION, OR (2) A SIMILARLY EFFECTIVE MEANS DESIGNED TO PREVENT THE DISCHARGE OF POLLUTANTS (E.G., SECONDARY CONTAINMENT). (SECTION 2.3.7)
20. PREVENT TRACKING OF SEDIMENT ONTO PUBLIC OR PRIVATE ROADS USING BMPS SUCH AS: CONSTRUCTION ENTRANCE, GRAVELED (OR PAVED) EXITS AND PARKING AREAS, GRAVEL ALL UNPAVED ROADS LOCATED ONSITE, OR USE AN EXIT TIRE WASH. THESE BMPS MUST BE IN PLACE PRIOR TO LAND- DISTURBING ACTIVITIES. (SECTION 2.2.7)
21. WHEN TRUCKING SATURATED SOILS FROM THE SITE, EITHER USE WATER-TIGHT TRUCKS OR DRAIN LOADS ON SITE. (SECTION 2.2.7.F)
22. CONTROL PROHIBITED DISCHARGES FROM LEAVING THE CONSTRUCTION SITE, I.E., CONCRETE WASH-OUT, WASTEWATER FROM CLEANOUT OF STUCCO, PAINT AND CURING COMPOUNDS. (SECTIONS 1.5 AND 2.3.9)
23. ENSURE THAT STEEP SLOPE AREAS WHERE CONSTRUCTION ACTIVITIES ARE NOT OCCURRING ARE NOT DISTURBED. (SECTION 2.2.10)
24. PREVENT SOIL COMPACTION IN AREAS WHERE POST-CONSTRUCTION INFILTRATION FACILITIES ARE TO BE INSTALLED. (SECTION 2.2.12)
25. USE BMPS TO PREVENT OR MINIMIZE STORMWATER EXPOSURE TO POLLUTANTS FROM SPILLS; VEHICLE AND EQUIPMENT FUELING, MAINTENANCE, AND STORAGE; OTHER CLEANING AND MAINTENANCE ACTIVITIES; AND WASTE HANDLING ACTIVITIES. THESE POLLUTANTS INCLUDE FUEL, HYDRAULIC FLUID, AND OTHER OILS FROM VEHICLES AND MACHINERY, AS WELL AS DEBRIS, FERTILIZER, PESTICIDES AND HERBICIDES, PAINTS, SOLVENTS, CURING COMPOUNDS AND ADHESIVES FROM CONSTRUCTION OPERATIONS. (SECTIONS 2.2.15 AND 2.3)
26. PROVIDE PLANS FOR SEDIMENTATION BASINS THAT HAVE BEEN DESIGNED PER SECTION 2.2.17 AND STAMPED BY AN OREGON PROFESSIONAL ENGINEER. (SEE SECTION 2.2.17.A)
27. IF ENGINEERED SOILS ARE USED ON SITE, A SEDIMENTATION BASIN/IMPOUNDMENT MUST BE INSTALLED. (SEE SECTIONS 2.2.17 AND 2.2.18)
28. PROVIDE A DEWATERING PLAN FOR ACCUMULATED WATER FROM PRECIPITATION AND UNCONTAMINATED GROUNDWATER SEEPAGE DUE TO SHALLOW EXCAVATION ACTIVITIES. (SEE SECTION 2.4)
29. IMPLEMENT THE FOLLOWING BMPS WHEN APPLICABLE: WRITTEN SPILL PREVENTION AND RESPONSE PROCEDURES, EMPLOYEE TRAINING ON SPILL PREVENTION AND PROPER DISPOSAL PROCEDURES, SPILL KITS IN ALL VEHICLES, REGULAR MAINTENANCE SCHEDULE FOR VEHICLES AND MACHINERY, MATERIAL DELIVERY AND STORAGE CONTROLS, TRAINING AND SIGNAGE, AND COVERED STORAGE AREAS FOR WASTE AND SUPPLIES. (SECTION 2.3)
30. USE WATER, SOIL-BINDING AGENT OR OTHER DUST CONTROL TECHNIQUE AS NEEDED TO AVOID WIND-BLOWN SOIL. (SECTION 2.2.9)
31. THE APPLICATION RATE OF FERTILIZERS USED TO REESTABLISH VEGETATION MUST FOLLOW MANUFACTURER'S RECOMMENDATIONS TO MINIMIZE NUTRIENT RELEASES TO SURFACE WATERS. EXERCISE CAUTION WHEN USING TIME-RELEASE FERTILIZERS WITHIN ANY WATERWAY RIPARIAN ZONE. (SECTION 2.3.5)
32. IF AN ACTIVE TREATMENT SYSTEM (FOR EXAMPLE, ELECTRO-COAGULATION, FLOCCULATION, FILTRATION, ETC.) FOR SEDIMENT OR OTHER POLLUTANT REMOVAL IS EMPLOYED, SUBMIT AN OPERATION AND MAINTENANCE PLAN (INCLUDING SYSTEM SCHEMATIC, LOCATION OF SYSTEM, LOCATION OF INLET, LOCATION OF DISCHARGE, DISCHARGE DISPERSION DEVICE DESIGN, AND A SAMPLING PLAN AND FREQUENCY) BEFORE OPERATING THE TREATMENT SYSTEM. OBTAIN ENVIRONMENTAL MANAGEMENT PLAN APPROVAL FROM DEQ BEFORE OPERATING THE TREATMENT SYSTEM. OPERATE AND MAINTAIN THE TREATMENT SYSTEM ACCORDING TO MANUFACTURER'S SPECIFICATIONS. (SECTION 1.2.9)
33. TEMPORARILY STABILIZE SOILS AT THE END OF THE SHIFT BEFORE HOLIDAYS AND WEEKENDS, IF NEEDED. THE REGISTRANT IS RESPONSIBLE FOR ENSURING THAT SOILS ARE STABLE DURING RAIN EVENTS AT ALL TIMES OF THE YEAR. (SECTION 2.2)
34. AS NEEDED BASED ON WEATHER CONDITIONS, AT THE END OF EACH WORKDAY SOIL STOCKPILES MUST BE STABILIZED OR COVERED, OR OTHER BMPS MUST BE IMPLEMENTED TO PREVENT DISCHARGES TO SURFACE WATERS OR CONVEYANCE SYSTEMS LEADING TO SURFACE WATERS. (SECTION 2.2.8)
35. SEDIMENT FENCE: REMOVE TRAPPED SEDIMENT BEFORE IT REACHES ONE THIRD OF THE ABOVE GROUND FENCE HEIGHT AND BEFORE FENCE REMOVAL. (SECTION 2.1.5.B)
36. OTHER SEDIMENT BARRIERS (SUCH AS BIOBAGS): REMOVE SEDIMENT BEFORE IT REACHES TWO INCHES DEPTH ABOVE GROUND HEIGHT AND BEFORE BMP REMOVAL. (SECTION 2.1.5.C)
37. CATCH BASINS: CLEAN BEFORE RETENTION CAPACITY HAS BEEN REDUCED BY FIFTY PERCENT. SEDIMENT BASINS AND SEDIMENT TRAPS: REMOVE TRAPPED SEDIMENTS BEFORE DESIGN CAPACITY HAS BEEN REDUCED BY FIFTY PERCENT AND AT COMPLETION OF PROJECT. (SECTION 2.1.5.D)
38. WITHIN 24 HOURS, SIGNIFICANT SEDIMENT THAT HAS LEFT THE CONSTRUCTION SITE, MUST BE REMEDIATED. INVESTIGATE THE CAUSE OF THE SEDIMENT RELEASE AND IMPLEMENT STEPS TO PREVENT A RECURRENCE OF THE DISCHARGE WITHIN THE SAME 24 HOURS. ANY IN-STREAM CLEAN-UP OF SEDIMENT SHALL BE PERFORMED ACCORDING TO THE OREGON DEPARTMENT OF STATE LANDS REQUIRED TIMEFRAME. (SECTION 2.2.19.A)
39. THE INTENTIONAL WASHING OF SEDIMENT INTO STORM SEWERS OR DRAINAGE WAYS MUST NOT OCCUR. VACUUMING OR DRY SWEEPING AND MATERIAL PICKUP MUST BE USED TO CLEANUP RELEASED SEDIMENTS. (SECTION 2.2.19)
40. DOCUMENT ANY PORTION(S) OF THE SITE WHERE LAND DISTURBING ACTIVITIES HAVE PERMANENTLY CEASED OR WILL BE TEMPORARILY INACTIVE FOR 14 OR MORE CALENDAR DAYS. (SECTION 6.5.F.)
41. PROVIDE TEMPORARY STABILIZATION FOR THAT PORTION OF THE SITE WHERE CONSTRUCTION ACTIVITIES CEASE FOR 14 DAYS OR MORE WITH A COVERING OF BLOWN STRAW AND A TACKIFIER, LOOSE STRAW, OR AN ADEQUATE COVERING OF COMPOST MULCH UNTIL WORK RESUMES ON THAT PORTION OF THE SITE. (SECTION 2.2.20)
42. DO NOT REMOVE TEMPORARY SEDIMENT CONTROL PRACTICES UNTIL PERMANENT VEGETATION OR OTHER COVER OF EXPOSED AREAS IS ESTABLISHED. ONCE CONSTRUCTION IS COMPLETE AND THE SITE IS STABILIZED, ALL TEMPORARY EROSION CONTROLS AND RETAINED SOILS MUST BE REMOVED AND DISPOSED OF PROPERLY, UNLESS NEEDED FOR LONG TERM USE FOLLOWING TERMINATION OF PERMIT COVERAGE. (SECTION 2.2.21)

BMP MATRIX FOR CONSTRUCTION PHASES

REFER TO DEQ GUIDANCE MANUAL FOR A COMPREHENSIVE LIST OF AVAILABLE BMP'S.

	CLEARING	MASS GRADING	STREET/UTILITY CONSTRUCTION	FINAL STABILIZATION
EROSION PREVENTION				
PRESERVE NATURAL VEGETATION	** X	X	X	X
GROUND COVER		X	X	X
HYDRAULIC APPLICATIONS				
PLASTIC SHEETING		X	X	X
MATTING	X	X	X	X
DUST CONTROL	X	X	X	X
TEMPORARY/ PERMANENT SEEDING		X	X	X
BUFFER ZONE				
OTHER: COMPOST BLANKET	X	X	X	X
OTHER: ORANGE CONSTRUCT FENCE		X	X	X
SEDIMENT CONTROL				
SEDIMENT FENCE (PERIMETER)	** X	X	X	X
SEDIMENT FENCE (INTERIOR)		X	X	X
INLET PROTECTION	** X	X	X	X
DEWATERING				
SEDIMENT BASIN				
STRAW WATTLES	** X	X	X	X
OTHER:				
RUN OFF CONTROL				
CONSTRUCTION ENTRANCE	** X	X	X	X
PIPE SLOPE DRAIN				
OUTLET PROTECTION		X	X	X
SURFACE ROUGHENING				
CHECK DAMS				
OTHER:				
POLLUTION PREVENTION				
PROPER SIGNAGE	X	X	X	X
HAZ WASTE MGMT	X	X	X	X
SPILL KIT ON-SITE	X	X	X	X
CONCRETE WASHOUT AREA			X	X
OTHER:				

** SIGNIFIES BMP THAT WILL BE INSTALLED PRIOR TO ANY GROUND DISTURBING ACTIVITY.

THE PERMITTEE IS REQUIRED TO MEET ALL THE CONDITIONS OF THE 1200-C PERMIT. THIS ESCP AND GENERAL CONDITIONS HAVE BEEN DEVELOPED TO FACILITATE COMPLIANCE WITH THE 1200-C PERMIT REQUIREMENTS. IN CASES OF DISCREPANCIES OR OMISSIONS, THE 1200-C PERMIT REQUIREMENTS SUPERCEDE REQUIREMENTS OF THIS PLAN.

SHEET INDEX

SHEET NUMBER	SHEET TITLE
EROSION AND SEDIMENT CONTROL PLANS	
EC-00	COVER SHEET AND GENERAL NOTES
EC-10	EXISTING CONDITIONS AND DEMOLITION
EC-11	EXISTING CONDITIONS AND DEMOLITION
EC-20	GRADING CONSTRUCTION
EC-21	GRADING CONSTRUCTION
EC-22	STREET, UTILITY CONSTRUCTION PLAN
EC-23	STREET, UTILITY CONSTRUCTION PLAN
EC-30	DETAILS

RATIONALE STATEMENT

A COMPREHENSIVE LIST OF AVAILABLE BEST MANAGEMENT PRACTICES (BMP) OPTIONS BASED ON DEQ's GUIDANCE MANUAL HAS BEEN REVIEWED TO COMPLETE THIS EROSION AND SEDIMENT CONTROL PLAN. SOME OF THE ABOVE LISTED BMP's WERE NOT CHOSEN BECAUSE THEY WERE DETERMINED TO NOT EFFECTIVELY MANAGE EROSION PREVENTION AND SEDIMENT CONTROL FOR THIS PROJECT BASED ON SPECIFIC SITE CONDITIONS, INCLUDING SOIL CONDITIONS TOPOGRAPHIC CONSTRAINTS, ACCESSIBILITY TO THE SITE, AND OTHER RELATED CONDITIONS, AS THE PROJECT PROGRESSES AND THERE IS A NEED TO REVISE THE ESC PLAN, AN ACTION PLAN WILL BE SUBMITTED.

_____
INITIAL

City of St. Helens
FOUNDED 1850

REGISTERED PROFESSIONAL ENGINEER
72,629
PRELIMINARY
OREGON
JUNE 11, 2022
KEITH BUISMAN

EXPIRES: 12/31/2023

Otak

Otak, Inc.
808 SW Third Avenue, Ste. 800
Portland, OR 97204
503. 287. 6825
www.otak.com

S. 1ST AND STRAND STREETS ROAD AND UTILITY EXTENSIONS
ST. HELENS, OREGON
EROSION AND SEDIMENT CONTROL PLANS

COVER SHEET AND GENERAL NOTES

TITLE

#	DATE	DESCRIPTION

REVISIONS

NAVD88
DATUM

OTAK CAD — KJB
DRAWN BY — CHECKED BY

90% PLANS
STATUS

JANUARY 10, 2022
DATE

19823
PROJECT NUMBER

EC-00

© 2021 OTAK, INC.

If this drawing is not 22" x 34", it has been reduced/enlarged. Scale accordingly.

Plotted: Jan 10, 2022 - 7:24am keith.buisman \\Project\19880\19823\CADD\ACAD\Dwg\C19823EC00.dwg Layout Name: EC-00

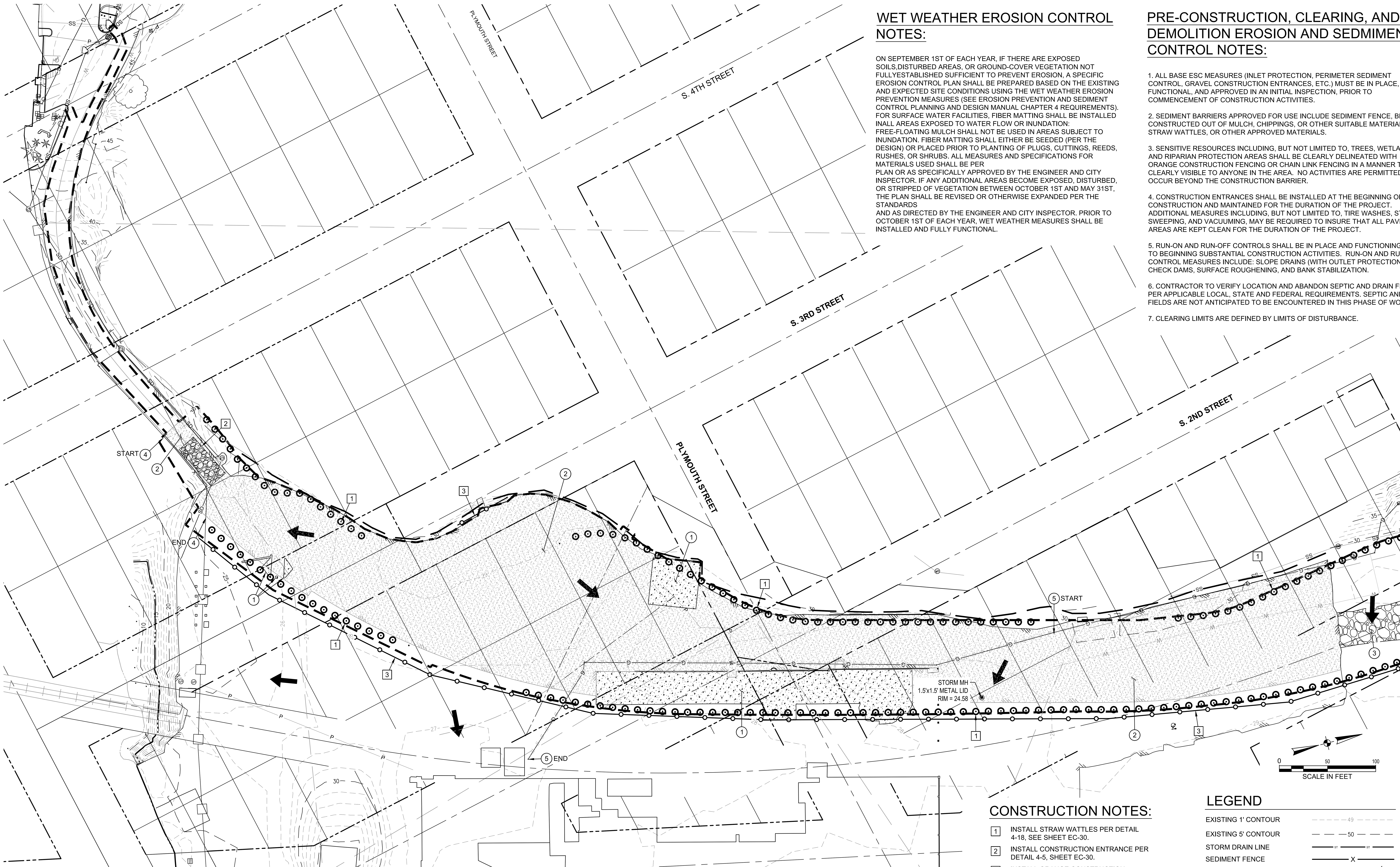

WET WEATHER EROSION CONTROL NOTES:

ON SEPTEMBER 1ST OF EACH YEAR, IF THERE ARE EXPOSED SOILS,DISTURBED AREAS, OR GROUND-COVER VEGETATION NOT FULLYESTABLISHED SUFFICIENT TO PREVENT EROSION, A SPECIFIC EROSION CONTROL PLAN SHALL BE PREPARED BASED ON THE EXISTING AND EXPECTED SITE CONDITIONS USING THE WET WEATHER EROSION PREVENTION MEASURES (SEE EROSION PREVENTION AND SEDIMENT CONTROL PLANNING AND DESIGN MANUAL CHAPTER 4 REQUIREMENTS). FOR SURFACE WATER FACILITIES, FIBER MATTING SHALL BE INSTALLED INALL AREAS EXPOSED TO WATER FLOW OR INUNDATION: FREE-FLOATING MULCH SHALL NOT BE USED IN AREAS SUBJECT TO INUNDATION. FIBER MATTING SHALL EITHER BE SEEDED (PER THE DESIGN) OR PLACED PRIOR TO PLANTING OF PLUGS, CUTTINGS, REEDS, RUSHES, OR SHRUBS. ALL MEASURES AND SPECIFICATIONS FOR MATERIALS USED SHALL BE PER PLAN OR AS SPECIFICALLY APPROVED BY THE ENGINEER AND CITY INSPECTOR. IF ANY ADDITIONAL AREAS BECOME EXPOSED, DISTURBED, OR STRIPPED OF VEGETATION BETWEEN OCTOBER 1ST AND MAY 31ST, THE PLAN SHALL BE REVISED OR OTHERWISE EXPANDED PER THE STANDARDS AND AS DIRECTED BY THE ENGINEER AND CITY INSPECTOR. PRIOR TO OCTOBER 1ST OF EACH YEAR, WET WEATHER MEASURES SHALL BE INSTALLED AND FULLY FUNCTIONAL.

PRE-CONSTRUCTION, CLEARING, AND DEMOLITION EROSION AND SEDMIMENT CONTROL NOTES:

1. ALL BASE ESC MEASURES (INLET PROTECTION, PERIMETER SEDIMENT CONTROL, GRAVEL CONSTRUCTION ENTRANCES, ETC.) MUST BE IN PLACE, FUNCTIONAL, AND APPROVED IN AN INITIAL INSPECTION, PRIOR TO COMMENCEMENT OF CONSTRUCTION ACTIVITIES.

2. SEDIMENT BARRIERS APPROVED FOR USE INCLUDE SEDIMENT FENCE, BERMS CONSTRUCTED OUT OF MULCH, CHIPPINGS, OR OTHER SUITABLE MATERIAL, STRAW WATTLES, OR OTHER APPROVED MATERIALS.

3. SENSITIVE RESOURCES INCLUDING, BUT NOT LIMITED TO, TREES, WETLANDS, AND RIPARIAN PROTECTION AREAS SHALL BE CLEARLY DELINEATED WITH ORANGE CONSTRUCTION FENCING OR CHAIN LINK FENCING IN A MANNER THAT IS CLEARLY VISIBLE TO ANYONE IN THE AREA. NO ACTIVITIES ARE PERMITTED TO OCCUR BEYOND THE CONSTRUCTION BARRIER.

4. CONSTRUCTION ENTRANCES SHALL BE INSTALLED AT THE BEGINNING OF CONSTRUCTION AND MAINTAINED FOR THE DURATION OF THE PROJECT. ADDITIONAL MEASURES INCLUDING, BUT NOT LIMITED TO, TIRE WASHES, STREET SWEEPING, AND VACUUMING, MAY BE REQUIRED TO INSURE THAT ALL PAVED AREAS ARE KEPT CLEAN FOR THE DURATION OF THE PROJECT.

5. RUN-ON AND RUN-OFF CONTROLS SHALL BE IN PLACE AND FUNCTIONING PRIOR TO BEGINNING SUBSTANTIAL CONSTRUCTION ACTIVITIES. RUN-ON AND RUN-OFF CONTROL MEASURES INCLUDE: SLOPE DRAINS (WITH OUTLET PROTECTION), CHECK DAMS, SURFACE ROUGHENING, AND BANK STABILIZATION.

6. CONTRACTOR TO VERIFY LOCATION AND ABANDON SEPTIC AND DRAIN FIELDS PER APPLICABLE LOCAL, STATE AND FEDERAL REQUIREMENTS. SEPTIC AND DRAIN FIELDS ARE NOT ANTICIPATED TO BE ENCOUNTERED IN THIS PHASE OF WORK).

7. CLEARING LIMITS ARE DEFINED BY LIMITS OF DISTURBANCE.

CONSTRUCTION NOTES:

1. INSTALL STRAW WATTLES PER DETAIL 4-18, SEE SHEET EC-30.
2. INSTALL CONSTRUCTION ENTRANCE PER DETAIL 4-5, SHEET EC-30.
3. INSTALL ORANGE CONSTRUCTION FENCE.

DEMOLITION KEY NOTES:

1. REMOVE EXISTING CONCRETE PAD.
2. REMOVE EXISTING ASPHALT.
3. REMOVE EXISTING GRAVEL.
4. REMOVE EXISTING FENCE.
5. REMOVE EXISTING GAS LINE.

LEGEND

- EXISTING 1' CONTOUR
- EXISTING 5' CONTOUR
- STORM DRAIN LINE
- SEDIMENT FENCE
- TREES TO REMAIN
- TREES TO BE REMOVED
- ORANGE CONST. FENCING
- LIMITS OF DISTURBANCE
- CONSTRUCTION ENTRANCE
- DRAINAGE ARROW
- STRAW WATTLES

City of St. Helens
FOUNDED 1850

REGISTERED PROFESSIONAL ENGINEER
72,629
PRELIMINARY
OREGON
JUNE 11, 2008
KEITH BUISMAN
EXPIRES: 12/31/2023

Otak

Otak, Inc.
808 SW Third Avenue, Ste. 800
Portland, OR 97204
503. 287. 6825
www.otak.com

S. 1ST AND STRAND STREETS ROAD AND UTILITY EXTENSIONS

ST. HELENS, OREGON
EROSION AND SEDIMENT CONTROL PLANS

EXISTING CONDITIONS AND DEMOLITION

TITLE

#	DATE	DESCRIPTION

REVISIONS

NAVD88
DATUM

OTAK CAD | KJB
DRAWN BY | CHECKED BY

90% PLANS
STATUS

JANUARY 10, 2022
DATE

19823
PROJECT NUMBER

EC-10

© 2021 OTAK, INC.

If this drawing is not 22" x 34", it has been reduced/enlarged. Scale accordingly.

Plotted: Jan 10, 2022 - 7:24pm keith.buisman L:\Project\19800\19823\CADD\ACAD\Dwg\C19823EC10.dwg Layout Name: EC-10

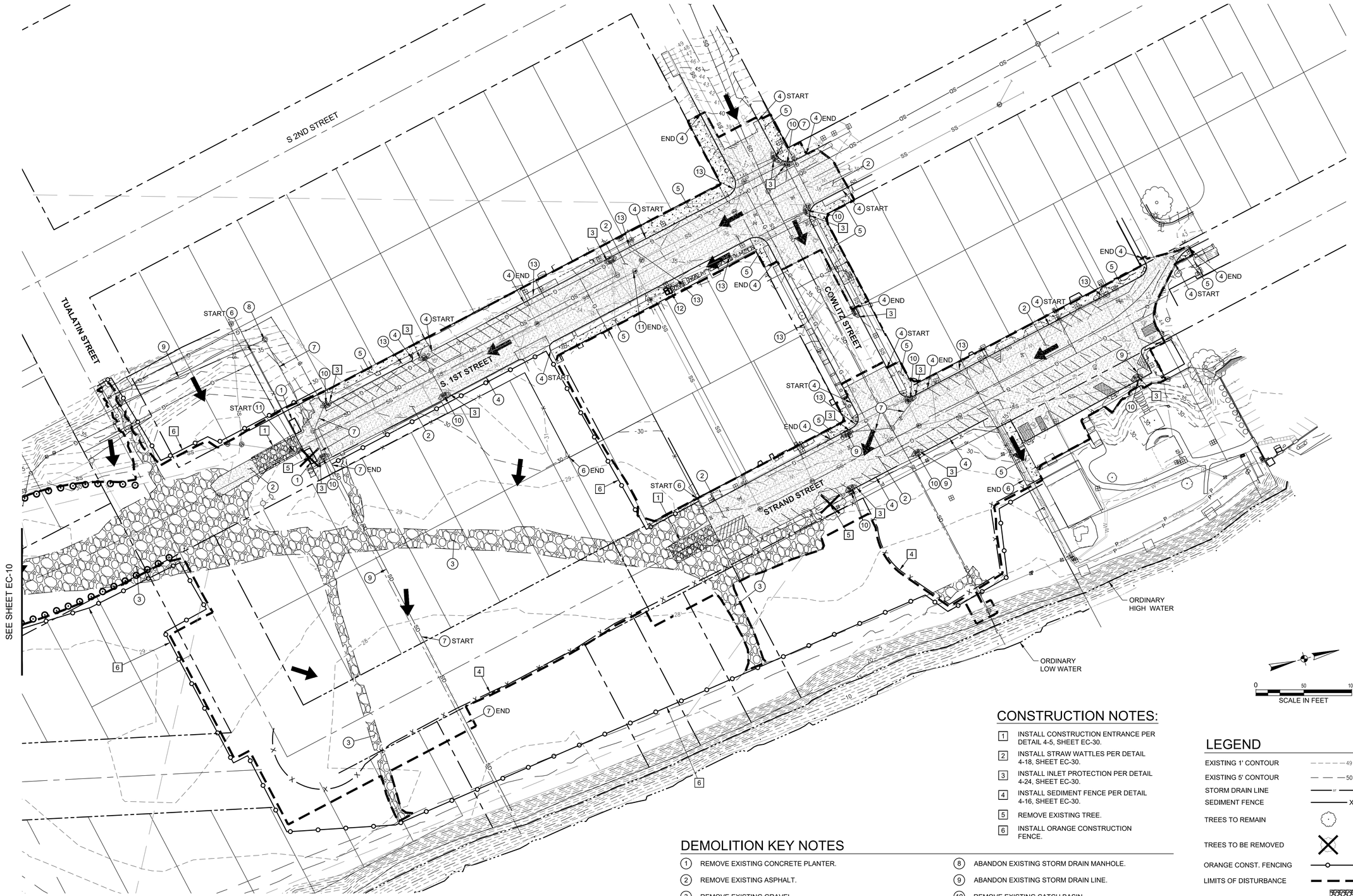

CONSTRUCTION NOTES:

1. INSTALL CONSTRUCTION ENTRANCE PER DETAIL 4-5, SHEET EC-30.
2. INSTALL STRAW WATTLES PER DETAIL 4-18, SHEET EC-30.
3. INSTALL INLET PROTECTION PER DETAIL 4-24, SHEET EC-30.
4. INSTALL SEDIMENT FENCE PER DETAIL 4-16, SHEET EC-30.
5. REMOVE EXISTING TREE.
6. INSTALL ORANGE CONSTRUCTION FENCE.

DEMOLITION KEY NOTES

1. REMOVE EXISTING CONCRETE PLANTER.
2. REMOVE EXISTING ASPHALT.
3. REMOVE EXISTING GRAVEL.
4. REMOVE EXISTING CURB LINE.
5. REMOVE EXISTING SIDEWALK.
6. REMOVE EXISTING FENCE.
7. REMOVE EXISTING STORM DRAIN LINE.
8. ABANDON EXISTING STORM DRAIN MANHOLE.
9. ABANDON EXISTING STORM DRAIN LINE.
10. REMOVE EXISTING CATCH BASIN.
11. ABANDON EXISTING SANITARY SEWER LINE.
12. REMOVE EXISTING SANITARY PUMP STATION.
13. REMOVE EXISTING POWER POLE, UNDERGROUNDING, AND OVERHEAD LINES.

LEGEND

EXISTING 1' CONTOUR	49
EXISTING 5' CONTOUR	50
STORM DRAIN LINE	st st
SEDIMENT FENCE	X
TREES TO REMAIN	
TREES TO BE REMOVED	
ORANGE CONST. FENCING	
LIMITS OF DISTURBANCE	
CONSTRUCTION ENTRANCE	
DRAINAGE ARROW	
STRAW WATTLES	

City of St. Helens FOUNDED 1850

REGISTERED PROFESSIONAL ENGINEER 72,629 OREGON JUNE 11, 2009 KEITH BUISMAN
PRELIMINARY
EXPIRES: 12/31/2023

Otak
Otak, Inc.
808 SW Third Avenue, Ste. 800
Portland, OR 97204
503. 287. 6825
www.otak.com

S. 1ST AND STRAND STREETS ROAD AND UTILITY EXTENSIONS

ST. HELENS, OREGON
EROSION AND SEDIMENT CONTROL PLANS

EXISTING CONDITIONS AND DEMOLITION

TITLE

#	DATE	DESCRIPTION

REVISIONS

NAVD88
DATUM

OTAK CAD — KJB
DRAWN BY — CHECKED BY

90% PLANS
STATUS

JANUARY 10, 2022
DATE

19823
PROJECT NUMBER

EC-11

© 2021 OTAK, INC.

If this drawing is not 22" x 34", it has been reduced/enlarged. Scale accordingly.

Plotted: Jan 10, 2022 - 1:24pm, keith.buisman L:\Project\19800\19823\CADD\ACAD\Dwg\C19823EC10.dwg Layout Name: EC-11

GRADING AND EROSION CONTROL NOTES:

1. SEED USED FOR TEMPORARY OR PERMANENT SEEDING SHALL BE COMPOSED OF ONE OF THE FOLLOWING MIXTURES, UNLESS OTHERWISE AUTHORIZED:
A. DWARF GRASS MIX (MIN. 100 LB./AC.) 1. DWARF PERENNIAL RYEGRASS (80% BY WEIGHT) 2. CREEPING RED FESCUE (20% BY WEIGHT)
B. STANDARD HEIGHT GRASS MIX (MIN. 100LB./AC.) 1. ANNUAL RYEGRASS (40% BY WEIGHT) 2. TURF-TYPE FESCUE (60% BY WEIGHT)
C. SEEDING MUST TAKE PLACE NO LATER THAN SEPTEMBER 1 TO ENSURE VEGETATION ESTABLISHMENT.

2. SLOPE TO RECEIVE TEMPORARY OR PERMANENT SEEDING SHALL HAVE THE SURFACE ROUGHENED BY MEANS OF TRACK-WALKING OR THE USE OF OTHER APPROVED IMPLEMENTS. SURFACE ROUGHENING IMPROVES SEED BEDDING AND REDUCES RUN-OFF VELOCITY.

3. LONG TERM SLOPE STABILIZATION MEASURES SHALL INCLUDE THE ESTABLISHMENT OF PERMANENT VEGETATIVE COVER VIA SEEDING WITH APPROVED MIX AND APPLICATION RATE.

4. TEMPORARY SLOPE STABILIZATION MEASURES SHALL INCLUDE: COVERING EXPOSED SOIL WITH PLASTIC SHEETING, STRAW MULCHING, WOOD CHIPS, OR OTHER APPROVED MEASURES.

5. STOCKPILED SOIL OR STRIPPINGS SHALL BE PLACED IN A STABLE LOCATION AND CONFIGURATION. DURING "WET WEATHER" PERIODS, STOCKPILES SHALL BE COVERED WITH PLASTIC SHEETING OR STRAW MULCH. SEDIMENT FENCE IS REQUIRED AROUND THE PERIMETER OF THE STOCKPILE.

6. EXPOSED CUT OR FILL AREAS SHALL BE STABILIZED THROUGH THE USE OF TEMPORARY SEEDING AND MULCHING, EROSION CONTROL BLANKETS OR MATS, MID-SLOPE SEDIMENT FENCES OR WATTLES, OR OTHER APPROPRIATE MEASURES. SLOPES EXCEEDING 4:1 MAY REQUIRE ADDITIONAL EROSION CONTROL MEASURES.

7. AREAS SUBJECT TO WIND EROSION SHALL USE APPROPRIATE DUST CONTROL MEASURES INCLUDING THE APPLICATION OF A FINE SPRAY OF WATER, PLASTIC SHEETING, STRAW MULCHING, OR OTHER APPROVED MEASURES.

8. CONSTRUCTION ENTRANCES SHALL BE INSTALLED AT THE BEGINNING OF CONSTRUCTION AND MAINTAINED FOR THE DURATION OF THE PROJECT. ADDITIONAL MEASURES INCLUDING, BUT NOT LIMITED TO, TIRE WASHES, STREET SWEEPING, AND VACUUMING MAY BE BE REQUIRED TO INSURE THAT ALL PAVED AREAS ARE KEPT CLEAN FOR THE DURATION OF THE PROJECT.

9. ACTIVE INLETS TO STORM WATER SYSTEMS SHALL BE PROTECTED THROUGH THE USE OF APPROVED INLET PROTECTION MEASURES. ALL INLET PROTECTION MEASURES ARE TO BE REGULARLY INSPECTED AND MAINTAINED AS NEEDED.

10. SATURATED MATERIALS THAT ARE HAULED OFF-SITE MUST BE TRANSPORTED IN WATER-TIGHT TRUCKS TO ELIMINATE SPILLAGE OF SEDIMENT AND SEDIMENT-LADEN WATER.

11. USE BMPS SUCH AS CHECK-DAMS, BERMS, AND INLET PROTECTION TO PREVENT RUN-OFF FROM REACHING DISCHARGE POINTS.

CONSTRUCTION NOTES:

1. INSTALL CHANNEL MATTING PER DETAIL 4-2, SHEET EC-30.
2. PROPOSED STORMWATER SWALE

EROSION CONTROL LEGEND

CONSTRUCTION LIMITS
SEDIMENT FENCE (TO BE INSTALLED PRIOR TO GRADING)
SECONDARY SEDIMENT BARRIER (TO BE INSTALLED AFTER GRADING)
STRAW WATTLES (TO BE INSTALLED AFTER GRADING)
ORANGE CONST. FENCING
CONSTRUCTION ENTRANCE
DRAINAGE FLOW DIRECTION
CHANNEL MATTING

EXISTING 1' CONTOUR
EXISTING 5' CONTOUR
PROPOSED 1' CONTOUR
PROPOSED 5' CONTOUR
STOCKPILE
CONSTRUCTION STAGING AREA (CLEAN ROCK PAD FOR SOLID & HAZARDOUS WASTE AND FUEL STORAGE)

CUT
FILL

City of St. Helens FOUNDED 1850

REGISTERED PROFESSIONAL ENGINEER 72,629 OREGON JUNE 11, 2008 KEITH BUISMAN
PRELIMINARY
EXPIRES: 12/31/2023

Otak
Otak, Inc.
808 SW Third Avenue, Ste. 800
Portland, OR 97204
503. 287. 6825
www.otak.com

S. 1ST AND STRAND STREETS ROAD AND UTILITY EXTENSIONS
ST. HELENS, OREGON
EROSION AND SEDIMENT CONTROL PLANS
GRADING CONSTRUCTION

TITLE

#	DATE	DESCRIPTION

REVISIONS

NAVD88
DATUM

OTAK CAD — KJB
DRAWN BY — CHECKED BY

90% PLANS
STATUS

JANUARY 10, 2022
DATE

19823
PROJECT NUMBER

EC-20

© 2021 OTAK, INC.

If this drawing is not 22" x 34", it has been reduced/enlarged. Scale accordingly.

Plotted: Jan 10, 2022 - 7:25am keith.buisman L:\Project\19880\19823\CADD\ACAD\Dwg\C19823EC20.dwg Layout Name: EC-20

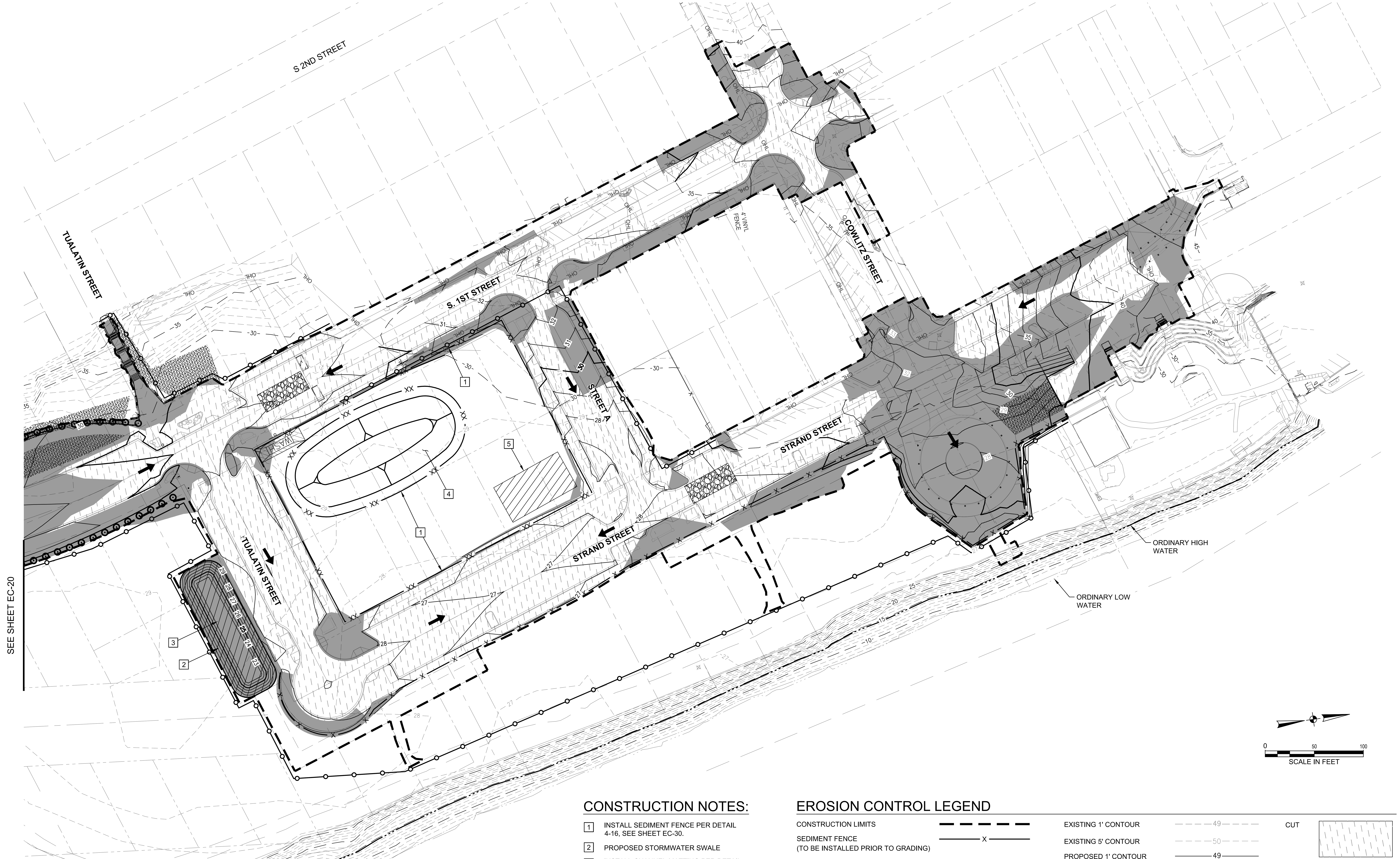

CONSTRUCTION NOTES:

1. INSTALL SEDIMENT FENCE PER DETAIL 4-16, SEE SHEET EC-30.
2. PROPOSED STORMWATER SWALE
3. INSTALL CHANNEL MATTING PER DETAIL 4-2, SHEET EC-30.
4. INSTALL STOCKPILE AREA PER DETAIL 4-4, SHEET EC-30.
5. CONSTRUCT STAGING AREA. INSTALL CLEAN ROCK PAD FOR SOLID HAZARDOUS WASTE. FUEL STORAGE, AND EQUIPMENT MAINTENANCE.
6. INSTALL SEDIMENT FENCING ALONG PERIMETER.

EROSION CONTROL LEGEND

- CONSTRUCTION LIMITS
- SEDIMENT FENCE (TO BE INSTALLED PRIOR TO GRADING)
- SECONDARY SEDIMENT BARRIER (TO BE INSTALLED AFTER GRADING)
- STRAW WATTLES (TO BE INSTALLED AFTER GRADING)
- ORANGE CONST. FENCING
- CONSTRUCTION ENTRANCE
- DRAINAGE FLOW DIRECTION
- CHANNEL MATTING
- EXISTING 1' CONTOUR — 49
- EXISTING 5' CONTOUR — 50
- PROPOSED 1' CONTOUR — 49
- PROPOSED 5' CONTOUR — 50
- STOCKPILE
- CONSTRUCTION STAGING AREA (CLEAN ROCK PAD FOR SOLID & HAZARDOUS WASTE AND FUEL STORAGE)
- CUT
- FILL

REGISTERED PROFESSIONAL ENGINEER
72,629
PRELIMINARY
OREGON
JUNE 11, 2008
KEITH BUISMAN
EXPIRES: 12/31/2023

Otak

Otak, Inc.
808 SW Third Avenue, Ste. 800
Portland, OR 97204
503. 287. 6825
www.otak.com

S. 1ST AND STRAND STREETS ROAD AND UTILITY EXTENSIONS

ST. HELENS, OREGON
EROSION AND SEDIMENT CONTROL PLANS

GRADING CONSTRUCTION

TITLE

#	DATE	DESCRIPTION

REVISIONS

NAVD88
DATUM

OTAK CAD
DRAWN BY
CHECKED BY

90% PLANS
STATUS

JANUARY 10, 2022
DATE

19823
PROJECT NUMBER

EC-21

© 2021 OTAK, INC.

If this drawing is not 22" x 34", it has been reduced/enlarged. Scale accordingly.

Plotted: Jan 10, 2022 - 7:25pm keith.buisman L:\Project\19800\19823\CADD\ACAD\Dwg\C19823EC20.dwg Layout Name: EC-21

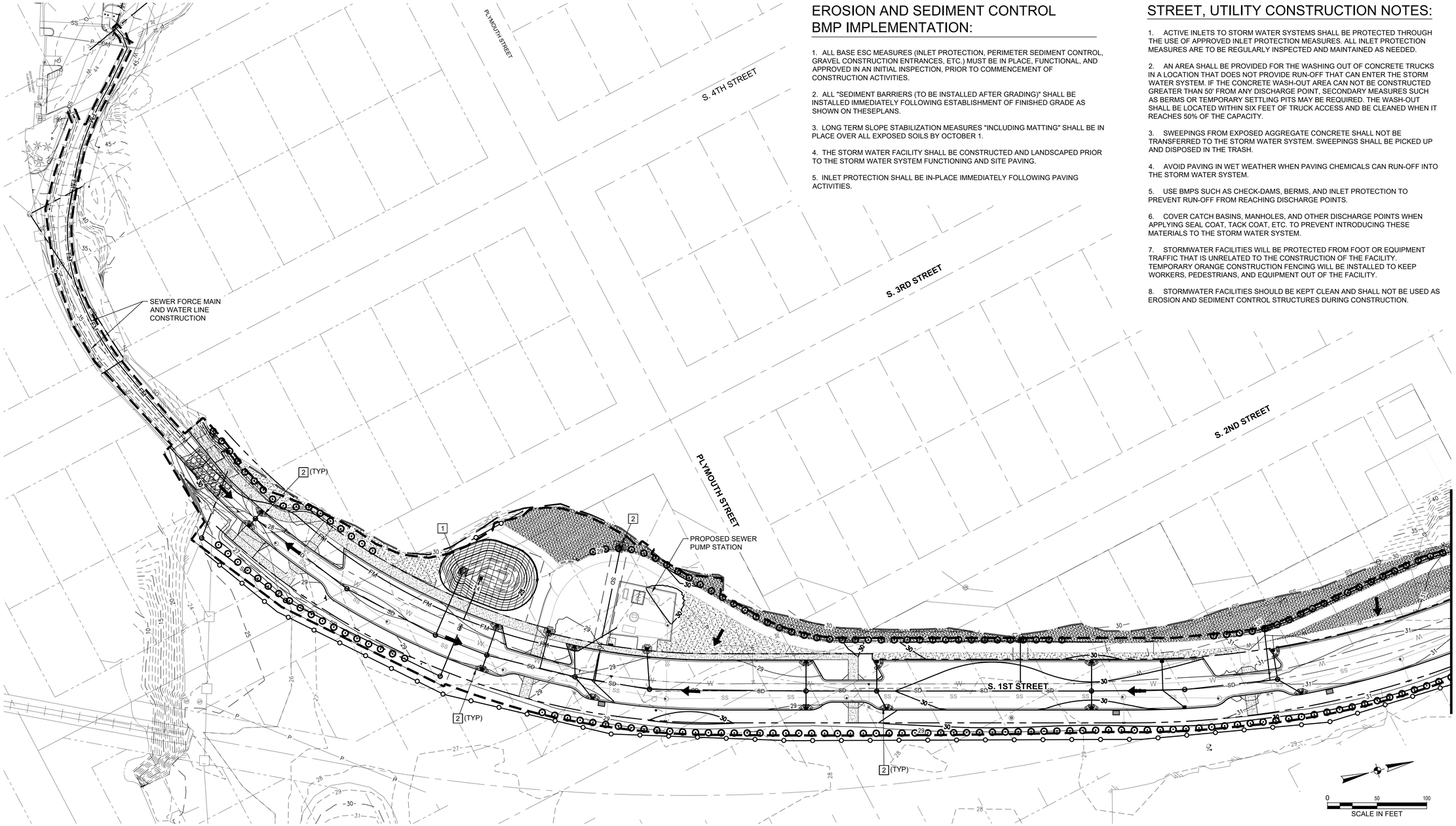

EROSION AND SEDIMENT CONTROL BMP IMPLEMENTATION:

1. ALL BASE ESC MEASURES (INLET PROTECTION, PERIMETER SEDIMENT CONTROL, GRAVEL CONSTRUCTION ENTRANCES, ETC.) MUST BE IN PLACE, FUNCTIONAL, AND APPROVED IN AN INITIAL INSPECTION, PRIOR TO COMMENCEMENT OF CONSTRUCTION ACTIVITIES.

2. ALL "SEDIMENT BARRIERS (TO BE INSTALLED AFTER GRADING)" SHALL BE INSTALLED IMMEDIATELY FOLLOWING ESTABLISHMENT OF FINISHED GRADE AS SHOWN ON THESEPLANS.

3. LONG TERM SLOPE STABILIZATION MEASURES "INCLUDING MATTING" SHALL BE IN PLACE OVER ALL EXPOSED SOILS BY OCTOBER 1.

4. THE STORM WATER FACILITY SHALL BE CONSTRUCTED AND LANDSCAPED PRIOR TO THE STORM WATER SYSTEM FUNCTIONING AND SITE PAVING.

5. INLET PROTECTION SHALL BE IN-PLACE IMMEDIATELY FOLLOWING PAVING ACTIVITIES.

STREET, UTILITY CONSTRUCTION NOTES:

1. ACTIVE INLETS TO STORM WATER SYSTEMS SHALL BE PROTECTED THROUGH THE USE OF APPROVED INLET PROTECTION MEASURES. ALL INLET PROTECTION MEASURES ARE TO BE REGULARLY INSPECTED AND MAINTAINED AS NEEDED.

2. AN AREA SHALL BE PROVIDED FOR THE WASHING OUT OF CONCRETE TRUCKS IN A LOCATION THAT DOES NOT PROVIDE RUN-OFF THAT CAN ENTER THE STORM WATER SYSTEM. IF THE CONCRETE WASH-OUT AREA CAN NOT BE CONSTRUCTED GREATER THAN 50' FROM ANY DISCHARGE POINT, SECONDARY MEASURES SUCH AS BERMS OR TEMPORARY SETTLING PITS MAY BE REQUIRED. THE WASH-OUT SHALL BE LOCATED WITHIN SIX FEET OF TRUCK ACCESS AND BE CLEANED WHEN IT REACHES 50% OF THE CAPACITY.

3. SWEEPINGS FROM EXPOSED AGGREGATE CONCRETE SHALL NOT BE TRANSFERRED TO THE STORM WATER SYSTEM. SWEEPINGS SHALL BE PICKED UP AND DISPOSED IN THE TRASH.

4. AVOID PAVING IN WET WEATHER WHEN PAVING CHEMICALS CAN RUN-OFF INTO THE STORM WATER SYSTEM.

5. USE BMPS SUCH AS CHECK-DAMS, BERMS, AND INLET PROTECTION TO PREVENT RUN-OFF FROM REACHING DISCHARGE POINTS.

6. COVER CATCH BASINS, MANHOLES, AND OTHER DISCHARGE POINTS WHEN APPLYING SEAL COAT, TACK COAT, ETC. TO PREVENT INTRODUCING THESE MATERIALS TO THE STORM WATER SYSTEM.

7. STORMWATER FACILITIES WILL BE PROTECTED FROM FOOT OR EQUIPMENT TRAFFIC THAT IS UNRELATED TO THE CONSTRUCTION OF THE FACILITY. TEMPORARY ORANGE CONSTRUCTION FENCING WILL BE INSTALLED TO KEEP WORKERS, PEDESTRIANS, AND EQUIPMENT OUT OF THE FACILITY.

8. STORMWATER FACILITIES SHOULD BE KEPT CLEAN AND SHALL NOT BE USED AS EROSION AND SEDIMENT CONTROL STRUCTURES DURING CONSTRUCTION.

CONSTRUCTION NOTES:

1. INSTALL OUTLET PROTECTION PER DETAIL 4-9, SHEET EC-30.
2. INSTALL INLET PROTECTION PER DETAIL 4-24, SHEET EC-30.

EROSION CONTROL LEGEND

- CONSTRUCTION LIMITS
- SEDIMENT FENCE (TO BE INSTALLED PRIOR TO GRADING) — X
- SECONDARY SEDIMENT BARRIER (TO BE INSTALLED AFTER GRADING) — XX
- STRAW WATTLES (TO BE INSTALLED AFTER GRADING)
- ORANGE CONST. FENCING
- CONSTRUCTION ENTRANCE
- EXISTING 1' CONTOUR — 49
- EXISTING 5' CONTOUR — 50
- PROPOSED 1' CONTOUR — 49
- PROPOSED 5' CONTOUR — 50
- DRAINAGE FLOW DIRECTION
- CHANNEL MATTING
- CONCRETE TRUCK WASHOUT — WASH
- CONSTRUCTION STAGING AREA (CLEAN ROCK PAD FOR SOLID & HAZARDOUS WASTE AND FUEL STORAGE)
- STOCKPILE — XX

City of St. Helens FOUNDED 1850

REGISTERED PROFESSIONAL ENGINEER 72,629 OREGON JUNE 11, 2008 KEITH BUISMAN
PRELIMINARY
EXPIRES: 12/31/2023

Otak

Otak, Inc.
808 SW Third Avenue, Ste. 800
Portland, OR 97204
503. 287. 6825
www.otak.com

S. 1ST AND STRAND STREETS ROAD AND UTILITY EXTENSIONS

ST. HELENS, OREGON
EROSION AND SEDIMENT CONTROL PLANS

STREET, UTILITY CONSTRUCTION PLAN

TITLE

#	DATE	DESCRIPTION

REVISIONS

NAVD88
DATUM

OTAK CAD — DRAWN BY
KJB — CHECKED BY

90% PLANS
STATUS

JANUARY 10, 2022
DATE

19823
PROJECT NUMBER

EC-22

© 2021 OTAK, INC.

If this drawing is not 22" x 34", it has been reduced/enlarged. Scale accordingly.

Plotted: Jan 10, 2022 - 7:28am keith.buisman L:\Project\19800\19823\CADD\ACAD\Dwg\C19823EC22.dwg Layout Name: EC-22

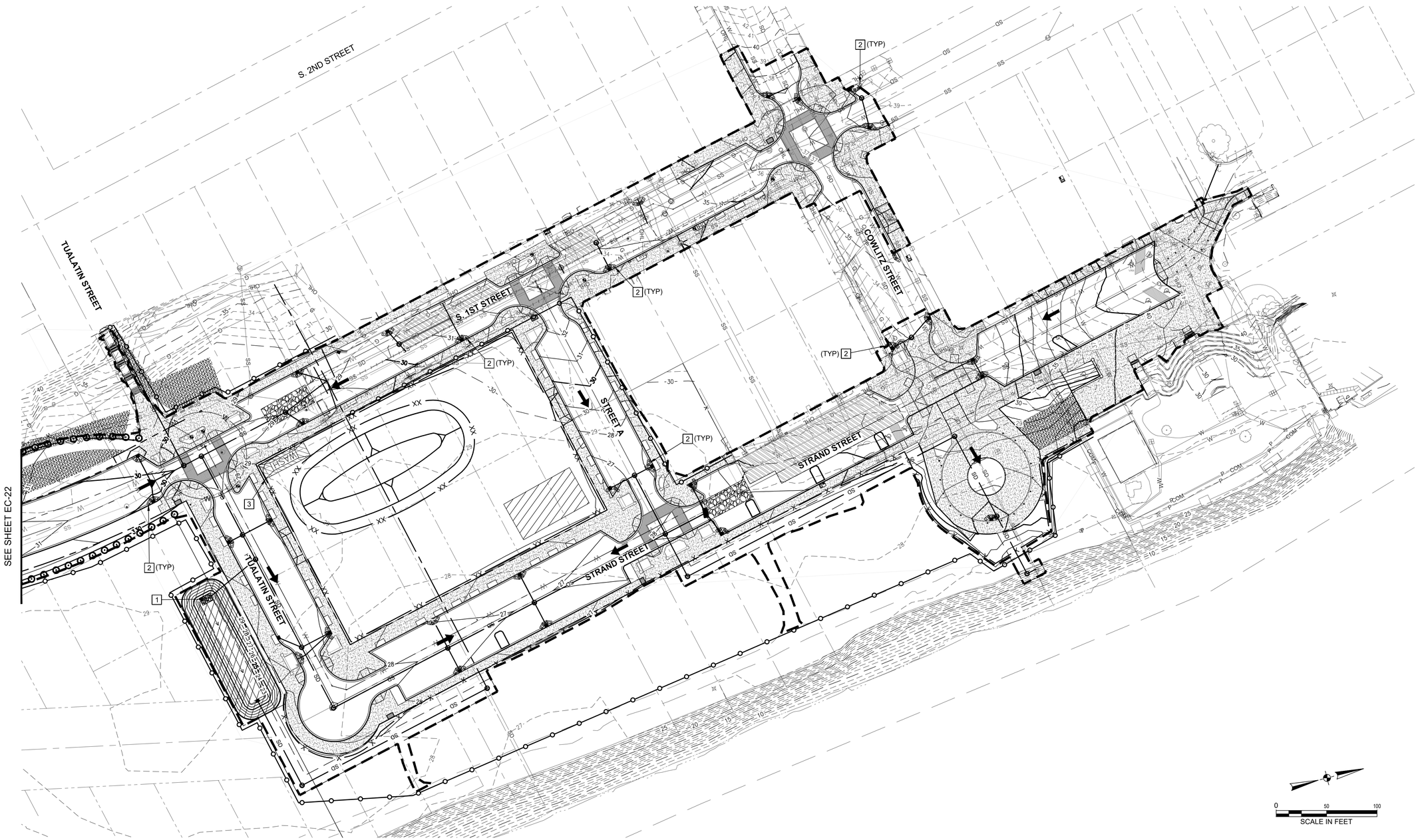

CONSTRUCTION NOTES:

1. INSTALL OUTLET PROTECTION PER DETAIL 4-9, SHEET EC-30.
2. INSTALL INLET PROTECTION PER DETAIL 4-24, SHEET EC-30.
3. INSTALL CONCRETE WASHOUT STATION PER DETAIL 1, SHEET EC-30.

EROSION CONTROL LEGEND

- CONSTRUCTION LIMITS
- SEDIMENT FENCE (TO BE INSTALLED PRIOR TO GRADING)
- SECONDARY SEDIMENT BARRIER (TO BE INSTALLED AFTER GRADING)
- STRAW WATTLES (TO BE INSTALLED AFTER GRADING)
- ORANGE CONST. FENCING
- CONSTRUCTION ENTRANCE
- EXISTING 1' CONTOUR
- EXISTING 5' CONTOUR
- PROPOSED 1' CONTOUR
- PROPOSED 5' CONTOUR
- DRAINAGE FLOW DIRECTION
- CHANNEL MATTING
- CONCRETE TRUCK WASHOUT
- CONSTRUCTION STAGING AREA (CLEAN ROCK PAD FOR SOLID & HAZARDOUS WASTE AND FUEL STORAGE)
- STOCKPILE

City of St. Helens FOUNDED 1850

REGISTERED PROFESSIONAL ENGINEER 72,629 OREGON JUNE 11, 2009 KEITH BUISMAN
PRELIMINARY
EXPIRES: 12/31/2023

Otak

Otak, Inc.
808 SW Third Avenue, Ste. 800
Portland, OR 97204
503. 287. 6825
www.otak.com

S. 1ST AND STRAND STREETS ROAD AND UTILITY EXTENSIONS

ST. HELENS, OREGON
EROSION AND SEDIMENT CONTROL PLANS

STREET, UTILITY CONSTRUCTION PLAN

TITLE

#	DATE	DESCRIPTION

REVISIONS

NAVD88
DATUM

OTAK CAD — KJB
DRAWN BY — CHECKED BY

90% PLANS
STATUS

JANUARY 10, 2022
DATE

19823
PROJECT NUMBER

EC-23

© 2021 OTAK, INC.

If this drawing is not 22" x 34", it has been reduced/enlarged. Scale accordingly.

Plotted: Jan 10, 2022 - 7:28am keith.buisman I:\Project\19800\19823\CADD\ACAD\Dwg\C19823EC22.dwg Layout Name: EC-23

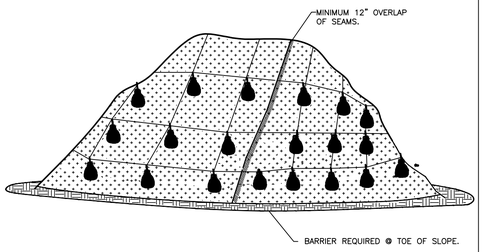

PLASTIC SHEETING

NOTES:
1. MINIMUM 12" OVERLAP OF ALL SEAMS REQUIRED.
2. BARRIER REQUIRED @ TOE OF STOCK PILE.
3. COVERING MAINTAINED TIGHTLY IN PLACE BY USING SANDBAGS OR TIRES ON ROPES WITH A MAXIMUM 10' GRID SPACING IN ALL DIRECTIONS.

PLASTIC SHEETING	Detail Drawing 4–4

Page 4–36

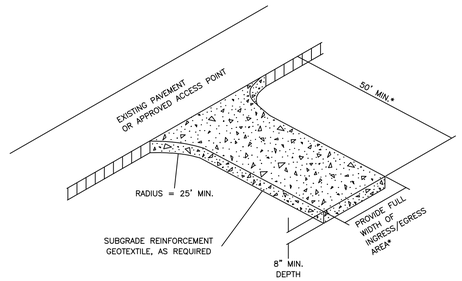

*20' MIN. FOR SINGLE FAMILY AND DUPLEX RESIDENTIAL

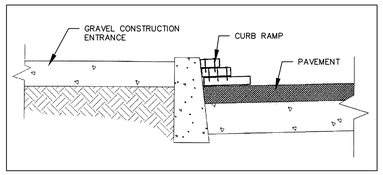

NOTES:
DIMENSIONS
SINGLE FAMILY
20' LONG BY 20' WIDE
8" DEEP OF ¾" MINUS CLEAN ROCK.
COMMERCIAL
50' LONG BY 20' WIDE
3–6" CLEAN ROCK,
GOVERNING AUTHORITY MAY REQUIRE GEOTEXTILE FABRIC TO PREVENT SUB–SOIL PUMPING.

CONSTRUCTION ENTRANCE	Detail Drawing 4–5

Page 4–43

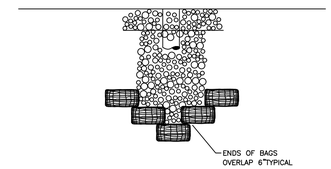

PLAN VIEW
NTS

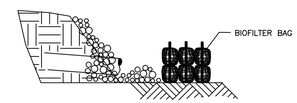

PROFILE

NOTE:
1. BIO BAGS ONLY REQUIRED WHEN DISCHARGING SEDIMENT LADEN WATER.
2. STAKING OF BAGS REQUIRED WITH EITHER METHOD USING (2) 1"x 2" WOOD STAKES OR APPROVED EQUAL PER BAG.

OUTLET PROTECTION RIP RAP	Detail Drawing 4–9

Page 4–58

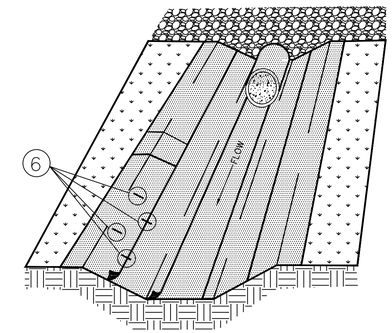

CHANNEL INSTALLATION

NOTES:
1. INFORMATION PROVIDED IS MINIMUM REQUIREMENTS. MANUFACTURES REQUIREMENTS WHICH ARE MORE STRINGENT SHALL BE USED.
2. INSTALL MAT PARALLEL IN CENTER OF CHANNEL IN THE DIRECTION OF FLOW. FOR CULVERT OUTFALLS, PLACE MAT UNDER CULVERT OR RIPRAP A MINIMUM OF 12 INCHES.
3. IN CHANNEL BOTTOM, OVERLAP LENGTH ENDS A MINIMUM OF 12 INCHES.
4. REFER TO DETAIL DRAWING 4–1 FOR CHANNEL SLOPE APPLICATION.
5. REFER TO DETAIL DRAWING 4–2 FOR STAPLE PATTERN.
6. LENGTH OF STAPLES SHALL BE DETERMINDED BY SOIL TYPE– COHESIVE SOIL USE 6 INCH, NON–COHESIVE SOILS 8–12 INCH.

MATTING CHANNEL INSTALLATION	Detail Drawing 4–2

Page 4–30

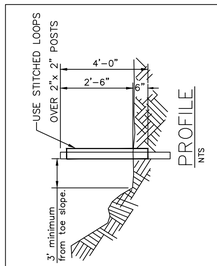

PROFILE
NTS

NOTES:
1. BURY BOTTOM OF FILTER FABRIC 6" VERTICALLY BELOW FINISHED GRADE.
2. 2"x 2" FIR, PINE OR STEEL FENCE POSTS.
3. POSTS TO BE INSTALLED ON UPHILL SIDE OF SLOPE.
4. COMPACT BOTH SIDES OF FILTER FABRIC TRENCH.
5. PANELS MUST BE PLACED ACCORDING TO SPACING TABLE 4–7.

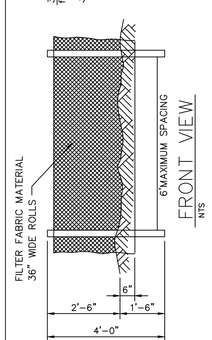

FRONT VIEW
NTS

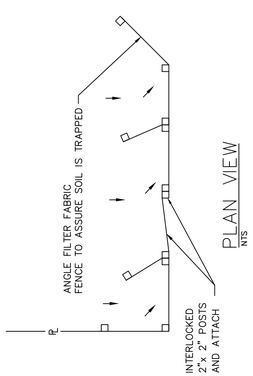

PLAN VIEW
NTS

SEDIMENT FENCE	Detail Drawing 4–16

Page 4–82

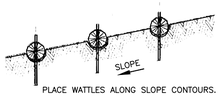

PLACE WATTLES ALONG SLOPE CONTOURS.

PROFILE

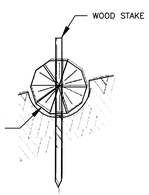

SECTION

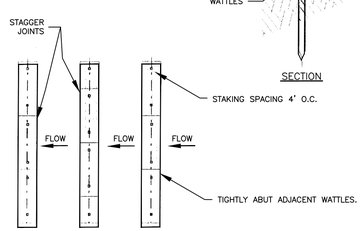

PLAN VIEW

NOTES:
1. STAKING SPECIFICATIONS:
   a. 1"X2" WOODEN STAKES
   b. ADDITIONAL STAKES MAY BE INSTALLED ON DOWNHILL SIDE OF WATTLES, ON STEEP SLOPE OR HIGHLY EROSIVE SOILS.
2. SPACING IN ACCORDANCE WITH TABLE 4–7.

WATTLES	Detail Drawing 4–18

Page 4–90

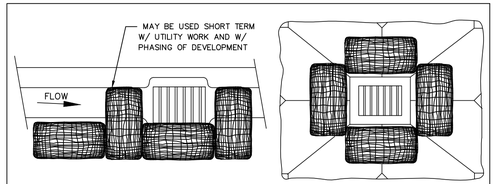

CATCH BASIN AREA DRAIN

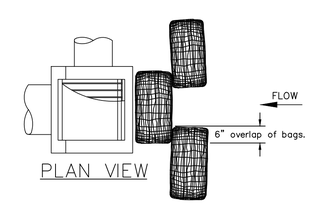

PLAN VIEW

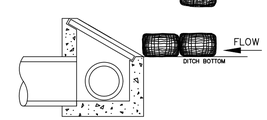

DITCH INLET

NOTES:
1. ADDITIONAL MEASURES MUST BE CONSIDERED DEPENDING ON SOIL TYPES.
2. BIOFILTER BAGS SHOULD BE STAKED WHERE APPLICABLE USING (2) 1"x2" WOODEN STAKES OR APPROVED EQUAL PER BAG.

INLET PROTECTION TYPE 4	Detail Drawing 4–24

Page 4–111

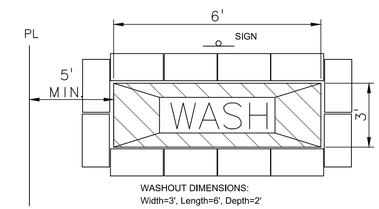

WASHOUT DIMENSIONS:
Width=3', Length=6', Depth=2'

NOTES:

1. CONSTRUCT CONCRETE WASHOUT STATION USING STRAW BALES STAKED TOGETHER AND DRAPED WITH PLASTIC SHEETING.

   PROVIDE SIGNAGE CLEARLY IDENTIFYING STATION AS A CONCRETE WASHOUT AREA.

   CAUTION SHALL BE USED TO NOT OVERFILL WASHOUT. EMPTY WASHOUT BEFORE REACHING 2/3 OF CAPACITY.

   WASHOUT WATER SHALL NOT BE RELEASED INTO STORM DRAIN SYSTEM, SURFACE WATERS, OR RETENTION POND.

   ALL WASH DOWN LIQUIDS AND SURREY SHALL BE NEUTRALIZED TO A PH OF 6.5 TO 7.5 WITH "DRY ICE" IN ACCORDANCE WITH DEQ REQUIREMENTS BEFORE OFFSITE DISPOSAL. NO LIQUIDS WILL BE ALLOWED TO SPILL OR LEAK FROM THE WASH DOWN PROCESS OR FACILITY. HARDENED CONCRETE MATERIALS WILL BE REMOVED FROM THE SITE AND DISPOSED OF AT AN APPROVED LANDFILL SITE.

DETAIL NUMBER 1

City of St. Helens FOUNDED 1850

REGISTERED PROFESSIONAL ENGINEER 72,629 OREGON JUNE 11, 2008 KEITH BUISMAN
PRELIMINARY
EXPIRES: 12/31/2023

Otak
Otak, Inc.
808 SW Third Avenue, Ste. 800
Portland, OR 97204
503. 287. 6825
www.otak.com

S. 1ST AND STRAND STREETS ROAD AND UTILITY EXTENSIONS

ST. HELENS, OREGON
EROSION AND SEDIMENT CONTROL PLANS

DETAILS

TITLE		
#	DATE	DESCRIPTION

REVISIONS

NAVD88
DATUM

OTAK CAD — KJB
DRAWN BY — CHECKED BY

90% PLANS
STATUS

JANUARY 10, 2022
DATE

19823
PROJECT NUMBER

EC-30

© 2021 OTAK, INC.

If this drawing is not 22" x 34", it has been reduced/enlarged. Scale accordingly.

Plotted: Jan 10, 2022–7:29am keith.buisman L:\Projects\19800\19823\CAD\ACAD\Dwgs\C\19823EC30.dwg Layout Name: EC-30

GENERAL NOTES

1. ALL WORKMANSHIP AND MATERIALS SHALL BE IN ACCORDANCE WITH THESE PLANS, THE SPECIAL PROVISIONS AND TECHNICAL SPECIFICATIONS OF THESE CONTRACT DOCUMENTS, AND THE LATEST EDITION OF THE OREGON STANDARD SPECIFICATIONS FOR CONSTRUCTION (ODOT).
2. BEFORE ANY CONSTRUCTION ACTIVITY, A PRECONSTRUCTION MEETING MUST BE HELD BETWEEN THE CITY, CONTRACTOR, AND THE ENGINEER.
3. CONTRACTOR SHALL OBTAIN ALL NECESSARY LOCAL, COUNTY, STATE, AND UTILITY CONSTRUCTION PERMITS AND SHALL CONTACT EACH PERMITTING AGENCY AT LEAST TWO (2) BUSINESS DAYS PRIOR TO STARTING WORK. CONTRACTOR SHALL OBTAIN ALL REQUIRED LICENSES PRIOR TO STARTING WORK.
4. THE CONTRACTOR SHALL BE RESPONSIBLE FOR DETERMINING THE LOCATION AND ELEVATION OF ALL EXISTING UNDERGROUND UTILITIES, INCLUDING THE INVERT AND TOP ELEVATIONS, PRIOR TO THE START OF CONSTRUCTION AND TO NOTIFY THE ENGINEER OF ANY POTENTIAL CONFLICTS. CONTRACTOR SHALL CONTACT THE NW UTILITY NOTIFICATION CENTER AT 1-800-424-5555 AT LEAST TWO (2), BUT NOT MORE THAN 10 WORKING DAYS BEFORE THE START OF CONSTRUCTION OF THE WORK AND SHALL COMPLY WITH STATE REQUIREMENTS FOR UTILITY LOCATING.
5. CONTRACTOR SHALL KEEP AND MAINTAIN A CURRENT SET OF DRAWINGS ON SITE. CONTRACTOR TO KEEP ACCURATE “AS-BUILT” RECORD COPY OF PLANS. “AS-BUILT” PLANS TO BE RETURNED TO ENGINEER AT COMPLETION OF PROJECT.
6. CONTRACTOR SHALL MAINTAIN ACCESS TO HOMES AND BUSINESSES AT ALL TIMES. PROVIDE WRITTEN NOTICE TO ALL PROPERTY OWNERS AT LEAST TWO (2) BUSINESS DAYS IN ADVANCE OF WORK ADJACENT TO PROPERTIES.
7. CONTRACTOR SHALL NOTIFY ENGINEER AND OWNER AT LEAST 48 HOURS BEFORE STARTING CONSTRUCTION, AND 24 HOURS BEFORE RESUMING WORK AFTER SHUTDOWNS EXCEPT FOR NORMAL RESUMPTION OF WORK FOLLOWING SATURDAYS, SUNDAYS, OR HOLIDAYS. CONTRACTOR SHALL NOTIFY THE ENGINEER A MINIMUM OF 48 HOURS PRIOR TO ANY TESTING OR REQUIRED INSPECTION.
8. ANY ALTERATION OR VARIANCE FROM THESE PLANS, EXCEPT MINOR FIELD ADJUSTMENTS NEEDED TO MEET EXISTING FIELD CONDITIONS, SHALL FIRST BE APPROVED BY THE ENGINEER. ANY PROPOSED CHANGES IN CONSTRUCTION PLANS MUST BE SUBMITTED IN WRITING AND APPROVED BY ENGINEER PRIOR TO COMMENCING WORK. ANY ALTERATIONS OR VARIANCE FROM THESE PLANS SHALL BE DOCUMENTED ON CONSTRUCTION “AS-BUILT” PLANS AND TRANSMITTED TO THE ENGINEER.
9. CONTRACTOR SHALL PROTECT ALL PROPERTY CORNERS, SURVEY MONUMENTS AND CONTROL POINTS. SURVEY MONUMENTS OF THIS TYPE DISTURBED DURING CONSTRUCTION SHALL BE REPLACED AT CONTRACTOR'S EXPENSE, WITH APPROPRIATE SURVEYS FILED WITH THE CITY OR COUNTY SURVEYOR.
10. ALL STRUCTURES, LOTS, SWALES, DITCHES, CURBS, FENCES, WALLS, MAILBOXES, SIGNS, POLES, GUY WIRES, PIPING, AND OTHER UTILITIES DISTURBED DURING CONSTRUCTION SHALL BE RESTORED TO EXISTING CONDITION OR BETTER UNLESS OTHERWISE SPECIFIED.
11. CONTRACTOR TO PROVIDE SHORING, AS NEEDED, IN ACCORDANCE WITH ODOT STANDARD SPECIFICATION 00510.44(B).
12. CONTRACTOR SHALL PROVIDE SURFACE RESTORATION TO MATCH EXISTING CONDITIONS.
13. CONTRACTOR SHALL DISPOSE OF ALL REMOVED OR REPLACED MATERIAL AND EQUIPMENT IN ACCORDANCE WITH ALL APPLICABLE REGULATIONS, EXCEPT THOSE ITEMS DESIGNATED BY THE OWNER FOR SALVAGING. SALVAGED ITEMS SHALL REMAIN THE PROPERTY OF THE OWNER AND SHALL BE CAREFULLY REMOVED AND STORED AS DIRECTED.

DETAIL DESIGNATIONS

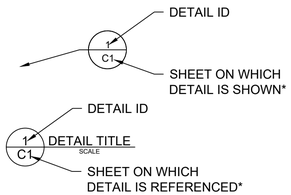

SECTION DESIGNATIONS

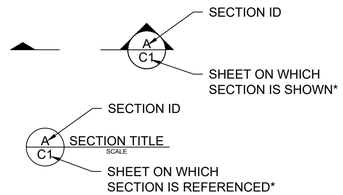

*SHOWN AS "--" IF DETAIL OR SECTION IS SHOWN ON MULTIPLE SHEETS

ABBREVIATIONS

ABS	ACRYLONITRILE BUTADIENE STYRENE
AC.	ACRE
AC	ASPHALTIC CONCRETE OR ASBESTOS CEMENT
AL	ALUMINUM
AGGR	AGGREGATE
ANSI	AMERICAN NATIONAL STANDARDS INSTITUTE
APWA	AMERICAN PUBLIC WORKS ASSOCIATION
APPROX	APPROXIMATE
ASTM	AMERICAN SOCIETY FOR TESTING AND MATERIALS
B&S	BELL AND SPIGOT
BO	BLOWOFF
BOTT	BOTTOM
BDRY	BOUNDARY
BFV	BUTTERFLY VALVE
BKFL	BACKFILL
BLVD	BOULEVARD
BLDG	BUILDING
BM	BENCH MARK
BPS	BOOSTER PUMP STATION
CB	CATCH BASIN
CFS	CUBIC FEET PER SECOND
CI	CAST IRON
CIP	CAST IRON PIPE
CL	CENTERLINE
CLR	CLEARANCE
CLSM	CONCRETE LOW STRENGTH MIX
CMP	CORRUGATED METAL PIPE
CND	CONDUIT
CO	CLEANOUT OR COUNTY
COMB	COMBINATION, COMBINATION SEWER
COMP	COMPACTED
CONC	CONCRETE
CONN	CONNECTION
CONST	CONSTRUCT
CORR	CORRUGATED
CU.	CUBIC
CULV	CULVERT
CY	CUBIC YARD
D	DEGREE OF CURVE OR DELTA
DC	DIRECT CURRENT
DEFL	DEFLECTION
DET	DETAIL
DEMO	DEMOLISH
DI	DUCTILE IRON
DIAM.	DIAMETER
DIP	DUCTILE IRON PIPE
DWG	DRAWING
DWY	DRIVEWAY
ECC	ECCENTRIC
EL	ELEVATION
ELEC	ELECTRIC OR ELECTRICAL
EMB	EMBANKMENT
ESMT	EASEMENT
EW	EACH WAY
EXC.	EXCAVATION
EXIST	EXISTING
EXP	EXPANSION
FBE	FUSION BONDED EPOXY
FDTN	FOUNDATION
FF	FINISHED FLOOR
FH	FIRE HYDRANT
FIN	FINISHED
FL	FLOW LINE
FLG	FLANGE
FT	FOOT OR FEET
GA	GAUGE
GAL	GALLONS
GALV	GALVANIZED
GEN	GENERAL
GPM	GALLONS PER MINUTE
GV	GATE VALVE
HDPE	HIGH-DENSITY POLYETHYLENE
HMAC	HOT-MIXED ASPHALT CONCRETE
HORIZ	HORIZONTAL
HWL	HIGH WATER LINE
HWY	HIGHWAY
ID	INSIDE DIAMETER
IE	INVERT ELEVATION
IN.	INCHES
JCT	JUNCTION
LIN	LINEAR
LOC	LOCATION
LP	LIGHT POLE
LVL	LEVEL
MATL	MATERIAL
MAX	MAXIMUM
MIN	MINIMUM
MIX	MIXTURE
MJ	MECHANICAL JOINT
MGD	MILLION GALLONS PER DAY
MOD	MODIFIED
MON	MONOLITHIC
N/C	NORMALLY CLOSED
N/O	NORMALLY OPEN
NO.	NUMBER
NOM	NOMINAL
NORM	NORMAL
NTS	NOT TO SCALE
OC	ON CENTER
OD	OUTSIDE DIAMETER
OPS	OPERATIONS
PE	POLYETHYLENE
PERF	PERFORATED
PERM	PERMANENT
PH	PHASE
P/L	PROPERTY LINE
LB	POUND
PROF	PROFILE
PROP	PROPOSED
PS	PUMPING STATION
PS	PER SQUARE INCH
PVC	POLYVINYL CHLORIDE
PVMT	PAVEMENT
RCP	REINFORCED CONCRETE PIPE
RDWY	ROADWAY
RDCR	REDUCER
REINF	REINFORCE
REQ'D	REQUIRED
REV	REVISE
RPM	REVOLUTIONS PER MINUTE
RT	RIGHT
RTP	RIDGEFIELD TREATMENT PLANT
R/W, ROW	RIGHT-OF-WAY
SALV	SALVAGE
SCTP	SALMON CREEK TREATMENT PLANT
SEG	SEGMENT
SF	SQUARE FEET
SHT	SHEET
SL	SLOPE
SQ.	SQUARE
SST	STAINLESS STEEL
STA	STATION
STD	STANDARD
SURF	SURFACE
TB	THRUST BLOCK
TCP	TRAFFIC CONTROL PLAN
TEMP	TEMPORARY
THKN	THICKNESS
TOPO	TOPOGRAPHY
TP	TEST PIT
TYP	TYPICAL
UG	UNDERGROUND
VAR	VARIES
VERT	VERTICAL
WM	WATER METER
WS	WATER STANDPIPE
WT	WEIGHT
WV	WATER VALVE
w/	WITH
YD	YARD

GRAYLING ENGINEERS

City of St. Helens FOUNDED 1850

PRELIMINARY

Otak

Otak, Inc.
808 SW Third Avenue, Ste. 800
Portland, OR 97204
503. 287. 6825
www.otak.com

S. 1ST AND STRAND STREETS
ROAD AND UTILITY EXTENSIONS
ST. HELENS, OREGON

PUMP STATION NOTES AND ABBREVIATIONS

TITLE		
#	DATE	DESCRIPTION

REVISIONS

DATUM

GRAYLING CAD — DRAWN BY: KL — CHECKED BY: KJB

90% DESIGN
STATUS

JANUARY 10, 2022
DATE

19823
PROJECT NUMBER

PS-1

© 2021 OTAK, INC.

If this drawing is not 22" x 34", it has been reduced/enlarged. Scale accordingly.

Plotted: Jan 10, 2022 - 8:55am Hallies Dunn G:\Shared drives\Grayling\Projects\21054 1st and Strand Utility Improvements\500 CAD\501 Plan Sheets\21054 PUMP STATION.INFO.dwg Layout Name: PS-1 PUMP STATION NOTES AND ABBREVIATIONS

DESIGN DATA SUMMARY TABLE

PUMP STATION	
NAME	PUMP STATION # 1
TYPE	DUPLEX PUMP STATION WITH SUBMERSIBLE NON-CLOG SEWAGE PUMPS
PUMP MODEL	FLYGT NP 3153 HT 3 ~ 464
CAPACITY (PER PUMP)	MINIMUM 700 GPM AT 54.7 FEET TDH
MOTOR HORSEPOWER	15 HP
MOTOR DATA	460 V, 60 HZ, 3 PHASE, 1755 RPM
PUMP STARTS AT INFLOW = 50% OF PUMP CAPACITY	14 PER HOUR
WET WELL VOLUME	752 GALLONS (PUMPS OFF TO LEAD PUMP ON)
LEVEL CONTROL TYPE	SIEMENS HYDRORANGER 200 CONTROLLER w/ ECHOMAX XPS-15F ULTRASONIC TRANSDUCER
ALARM TELEMETRY TYPE	MISSION COMMUNICATIONS CELLULAR SCADA SYSTEM
STANDBY POWER TYPE	ON-SITE DIESEL GENERATOR
OVERFLOW POINT	MH #1 AND MH #4
OVERFLOW ELEVATION	28.1 FEET
100-YEAR FLOOD ELEVATION	26 FEET
EPA RELIABILITY CLASS	1
CORROSION/ ODOR CONTROL SYSTEM	
CHEMICAL STORAGE AND TYPE	N/A
METERING SYSTEM	N/A
FORCE MAIN	
TYPE AND LENGTH	DR 17 HDPE 8", 905 FEET
FORCE MAIN VELOCITY	5.0 FEET PER SECOND AT 700 GPM (8" FORCE MAIN)
PROFILE DESCRIPTION	CONTINUOUSLY ASCENDING PROFILE TO THE DISCHARGE JUNCTION STRUCTURE
AIR RELEASE VALVES	N/A
AVERAGE FORCE MAIN DETENTION TIME (ADWF)	9 MINUTES (700 GPM AT 7.55" INNER DIAMETER)
FLOW METER	TOSHIBA ELECTROMAGNETIC
JUNCTION STRUCTURE LOCATION	PLYMOUTH STREET AT THE WASTEWATER TREATMENT PLANT

SYSTEM HEAD CAPACITY CURVE

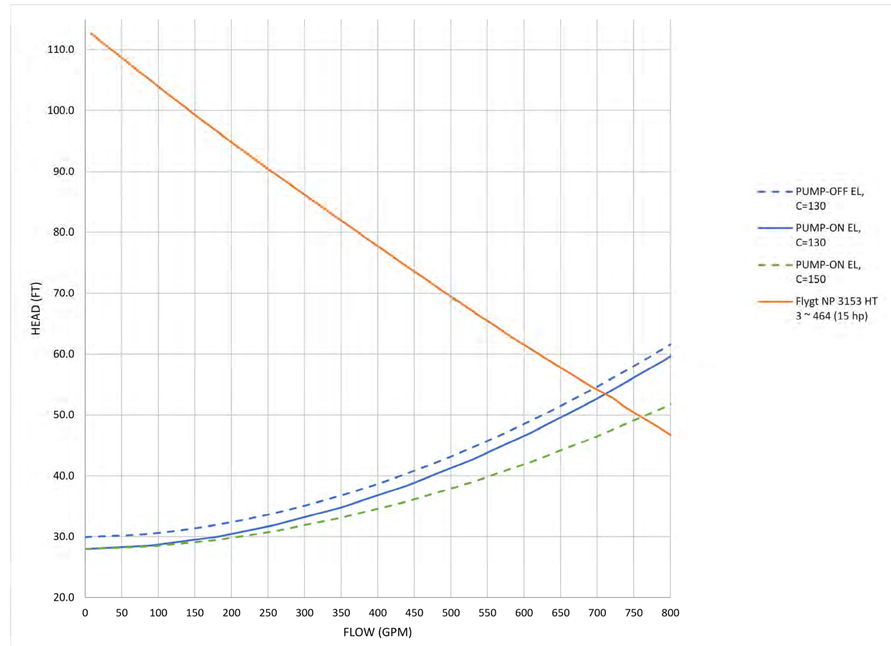

GRAYLING ENGINEERS

PRELIMINARY

Otak

Otak, Inc.
808 SW Third Avenue, Ste. 800
Portland, OR 97204
503. 287. 6825
www.otak.com

S. 1ST AND STRAND STREETS ROAD AND UTILITY EXTENSIONS

ST. HELENS, OREGON

PUMP STATION DESIGN DATA

TITLE

#	DATE	DESCRIPTION

REVISIONS

DATUM

GRAYLING CAD — DRAWN BY: KL — CHECKED BY: KJB

90% DESIGN — STATUS

JANUARY 10, 2022 — DATE

19823 — PROJECT NUMBER

PS-2

© 2021 OTAK, INC.

If this drawing is not 22" x 34", it has been reduced/enlarged. Scale accordingly.

Plotted: Jan 10, 2022 - 8:56am Hallee Dunn G:\Shared drives\Grayling\Projects\21054 1st and Strand Utility Improvements\500 CAD\501 Plan Sheets\21054 PUMP STATION.INFO.dwg Layout Name: PS-2 PUMP STATION DESIGN DATA

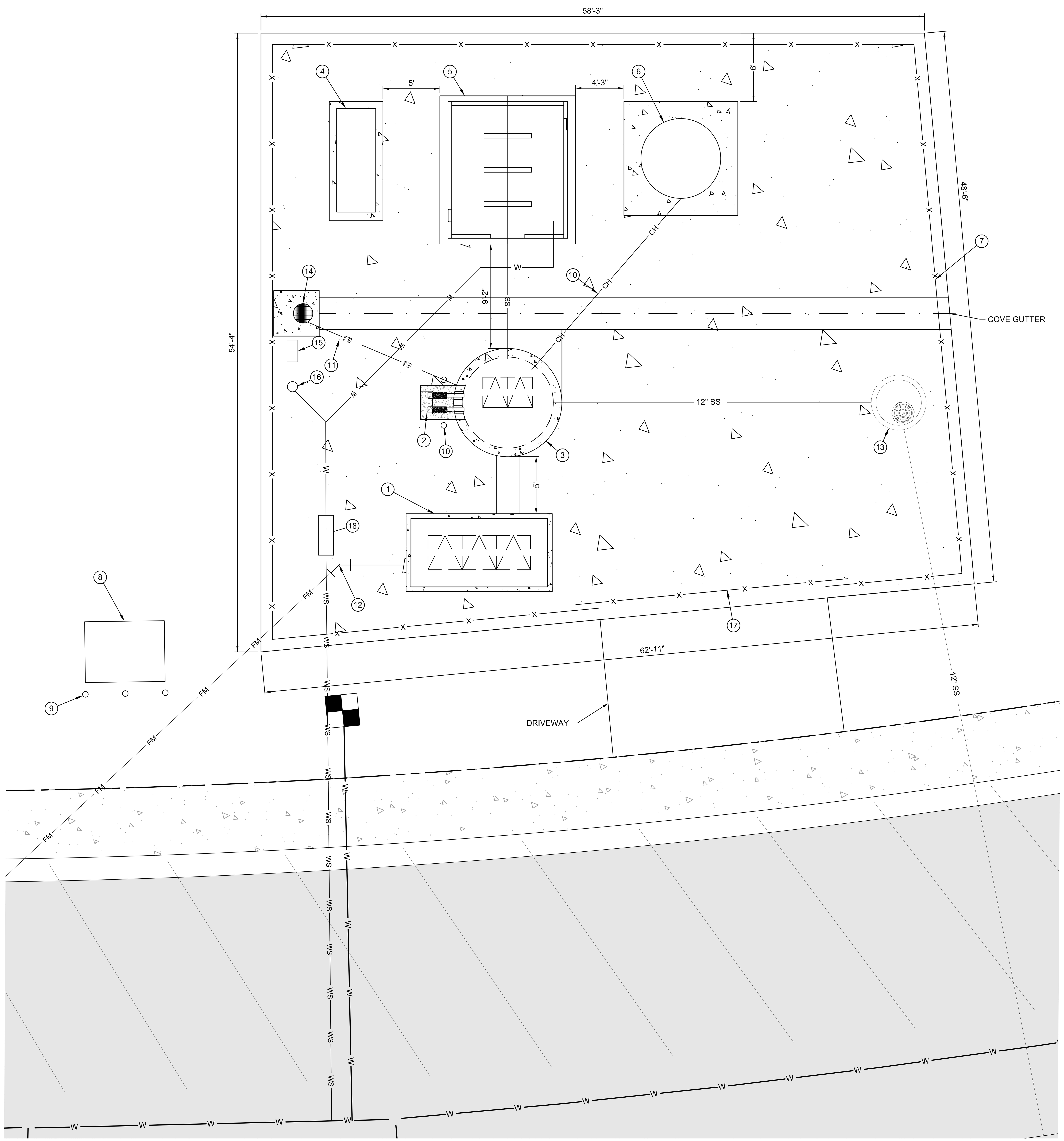

PUMP STATION KEY NOTES

1	7' x 13' VALVE VAULT, TOP SLAB, AND HATCH, SEE SHEET PS-5
2	PUMP DISCONNECT PANEL, SEE ELECTRICAL
3	8' DIAM. PRE-CAST WET WELL, TOP SLAB, AND HATCH, SEE SHEET PS-5
4	50 KW GENERATOR, SEE ELECTRICAL
5	ELECTRICAL CONTROL BUILDING, SEE ARCHITECTURAL SHEETS
6	1,000 GAL CHEMICAL FEED TANK (FUTURE)
7	6' CHAIN LINK FENCE W/ BLACK VINYL COATING AND 3-STRAND BARBED WIRE
8	ELEC SERVICE AND TRANSFORMER, SEE ELECTRICAL
9	BOLLARD, TYP 5, SEE DETAIL X, SHEET X
10	2" SCH 40 PVC CHEMICAL FEED CASING WITH LONG SWEEP ELBOWS, ROUTE BETWEEN CHEMICAL FEED SYSTEM AND WET WELL AT 2-FOOT MIN DEPTH WITH 2% MIN SLOPE.
11	8" DR 35 3034 PVC STORM PIPE
12	8" DI 45° BEND w/ RESTR JOINTS, CONNECT TO FORCE MAIN
13	4' ID MH, SEE SHEET 3B
14	AREA DRAIN, SEE DETAIL 4, SHEET PS-8
15	HOSE RACK, SEE DETAIL 3, SHEET PS-7
16	YARD HYDRANT, SEE DETAIL 2, SHEET PS-7
17	INSTALL 20' ALUMINUM SLIDING AUTOMATED COMMERCIAL GATE w/ DOORKING MODEL 9100 GATE OPERATOR OR APPPROVED EQUAL w/ KEY PAD ENTRY.
18	RPBA AND ENCLOSURE, SEE DETAIL 1, SHEET PS-8

NOTES

1. SEE PLANTING PLANS FOR LANDSCAPING REQUIREMENTS.

0 5 10
SCALE IN FEET

GRAYLING ENGINEERS

City of St. Helens FOUNDED 1850

PRELIMINARY

Otak
Otak, Inc.
808 SW Third Avenue, Ste. 800
Portland, OR 97204
503. 287. 6825
www.otak.com

S. 1ST AND STRAND STREETS ROAD AND UTILITY EXTENSIONS

ST. HELENS, OREGON

PUMP STATION SITE PLAN

TITLE

#	DATE	DESCRIPTION

REVISIONS

DATUM

GRAYLING CAD — DRAWN BY
KL### — CHECKED BY
90% DESIGN — STATUS
JANUARY 10, 2022 — DATE
19823 — PROJECT NUMBER

PS-3

© 2021 OTAK, INC.
If this drawing is not 22" x 34", it has been reduced/enlarged. Scale accordingly.

Plotted: Jan 10, 2022 - 8:56am Halliee Dunn G:\Shared drives\Grayling\Projects\2105A 1st and Strand Utility Improvements\500 CAD\501 Plan Sheets\2105A PUMP STATION SITE PLAN.dwg Layout Name: PS-3 PUMP STATION SITE PLAN

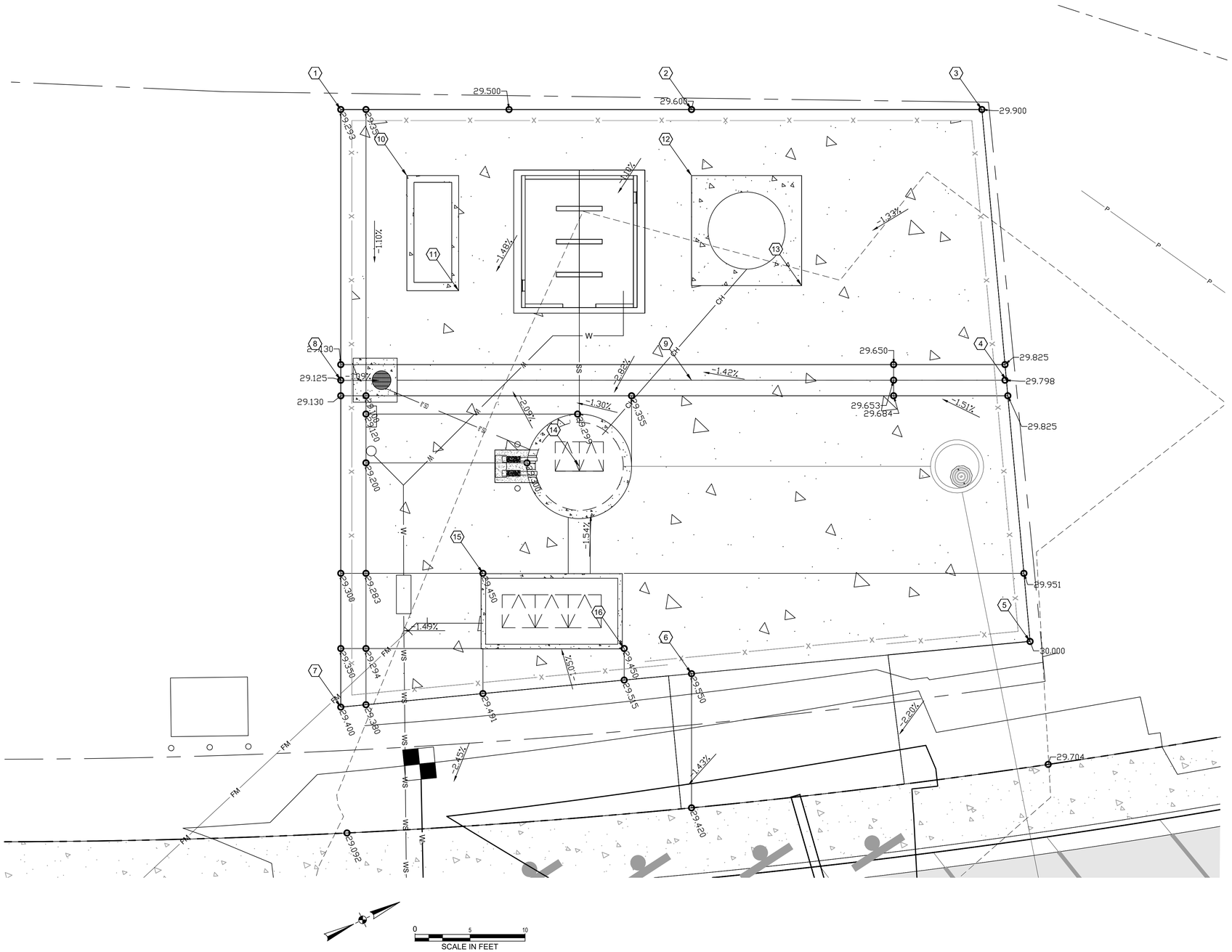

SURVEY STAKING POINTS

PT NO.	DESCRIPTION	EL.	NORTHING	EASTING
1	EOP			
2	EOP			
3	EOP			
4	EOP			
5	EOP			
6	EOP			
7	EOP			
8	EOP			
9	CB RIM			
10	GENSERT FDN			
11	GENSERT FDN			
12	CHEM TNK FDN			
13	CHEM TNK FDN			
14	WET WELL			
15	VAULT			
16	VAULT			

PRELIMINARY

Otak, Inc.
808 SW Third Avenue, Ste. 800
Portland, OR 97204
503. 287. 6825
www.otak.com

S. 1ST AND STRAND STREETS ROAD AND UTILITY EXTENSIONS

ST. HELENS, OREGON

PUMP STATION GRADING AND SURFACING PLAN

TITLE

#	DATE	DESCRIPTION

REVISIONS

DATUM

GRAYLING CAD KL###

DRAWN BY CHECKED BY

90% DESIGN

STATUS

JANUARY 10, 2022

DATE

19823

PROJECT NUMBER

PS-4

© 2021 OTAK, INC.

If this drawing is not 22" x 34", it has been reduced/enlarged. Scale accordingly.

GRAYLING ENGINEERS

Plotted: Jan 10, 2022 - 8:57am Hallsea Dunn G:\Shared drives\Grayling\Projects\2105A 1st and Strand Utility Improvements\500\CAD\601 Plan Sheets\2105A PUMP STATION SITE PLAN.dwg Layout Name: PS-4 PUMP STATION GRADING AND SURFACING PLAN

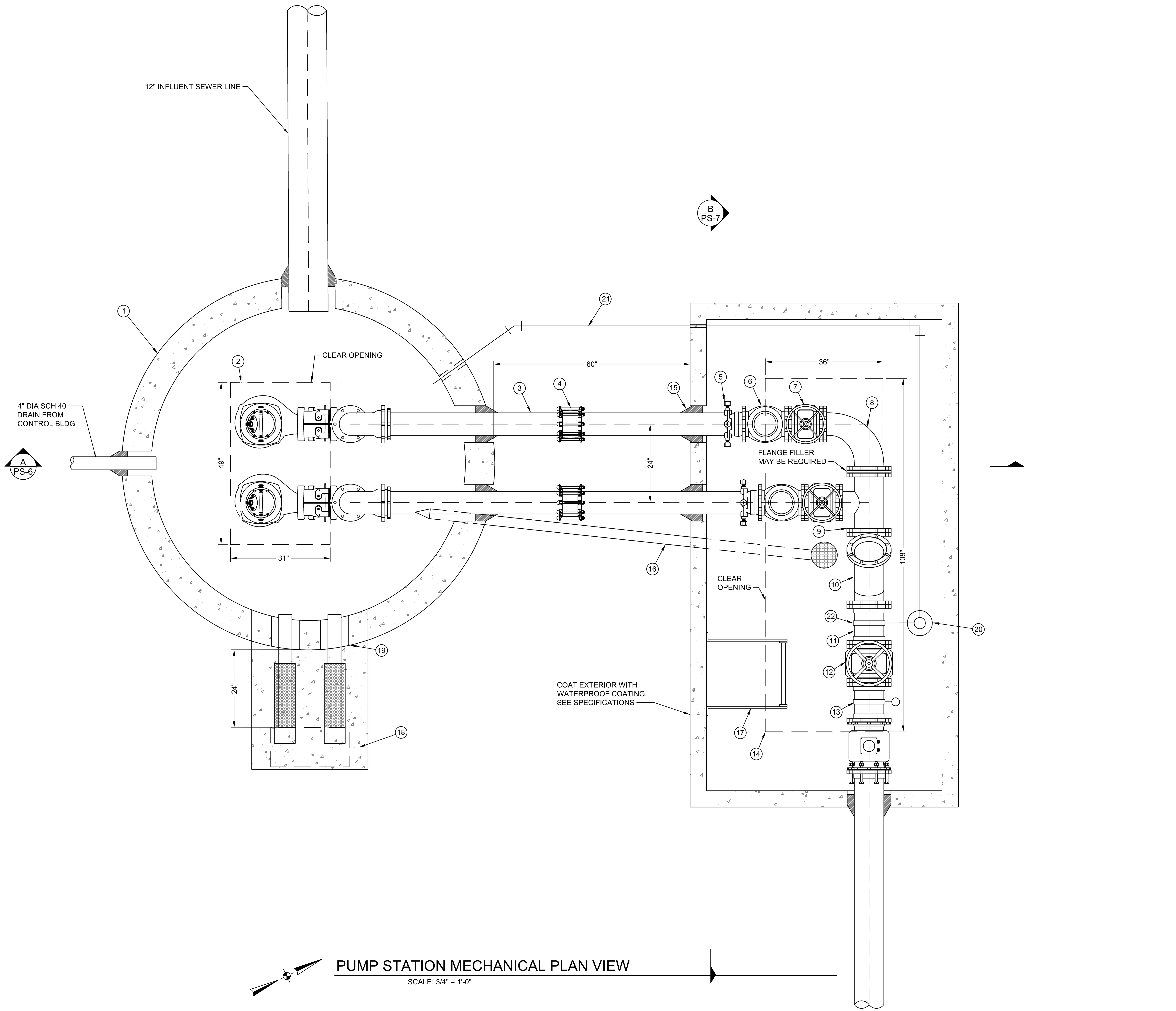

PUMP STATION MECHANICAL PLAN VIEW

SCALE: 3/4" = 1'-0"

KEY NOTES

1. 96-INCH ID PCC WET WELL w/ INTERIOR EPOXY COATING
2. H-20 RATED ACCESS HATCH w/ SAFETY GRATE AND CHANNEL FRAME, CLR OPENING AS SHOWN
3. 6" DI PIPE SEGMENT w/ EPOXY COATING (TYP 4)
4. 6" DI MJ LONG SLEEVE w/ JOINT RESTRAINTS (TYP 2)
5. 6" FL RESTRAINING ADAPTER (TYP 2)
6. 6" DI FL SWING CHECK VALVE (TYP 2)
7. 6" DI FL GATE VALVE (TYP 2)
8. 8" x 6" DI LONG SWEEP BEND
9. 8" x 6" DI FL TEE
10. 8" DI FL WYE
11. 8" DI FL SPOOL, LENGTH = 12 INCHES ±
12. 8" DI FL GATE VALVE
13. 8" DI PE PIPE SEGMENT
14. H-20 RATED TRIPLE LEAF ACCESS HATCH w/ DIAPHRAGM SEAL AND ISOLATION BALL VALVE
15. CORE IN FIELD AND INSTALL KOR-N-SEAL BOOT, OR APPROVED EQUAL
16. 3" CL52 DI DRAIN W/ FITTINGS AS NECESSARY
17. AL LADDER W/ 36" EXTENSION, OSHA APPROVED
18. PUMP DISCONNECT PANEL AND CABLE TRENCH, SEE DETAIL X, SHEET X
19. CABLE TRENCH ENTRANCE, SEE DETAIL X, SHEET X
20. 2" CARV, ARI SERIES D-025 LP, PROVIDE 2" SST BV ON INLET OF VALVE
21. 2" SCH 80 PVC VENT PIPING FROM CARV TO WET WELL
22. 3" NPT DI PIPE SADDLE W/ SST STRAP, ROUTE 3" DIA SCH 40 GALV PIPING TO COMBINATION AIR RELEASE VALVES (CARV)

NOTES

1. ALL NON-BURIED DUCTILE IRON PIPE SHALL BE EPOXY COATED, SEE SPECIFICATIONS.
2. CONTRACTOR RESPONSIBLE FOR ALL REQUIRED SHORING AND DEWATERING DESIGN. SUBMIT CALCULATIONS FOR THE SHORING AND DEWATERING DESIGN, STAMPED AND SIGNED BY AN ENGINEER LICENSED IN THE STATE OF OREGON.
3. BACKFILL STRUCTURES WITH 1.5" - 0" DENSE GRADED AGGREGATE COMPACTED TO 95% MAX DENSITY.
4. ALL HARDWARE INSIDE THE WET WELL SHALL BE TYPE 316 SS.
5. ALL CONCRETE STRUCTURE PIPE PENETRATIONS SHALL BE FIELD CORED.
6. PIPE AND FITTINGS IN VAULTS AND WET WELL TO BE COATED PER THE SPECIFICATIONS.
7. ALL HARDWARE AND FASTENERS SHALL BE STAINLESS STEEL IN ACCORDANCE WITH CITY STANDARDS UNLESS OTHERWISE NOTED.
8. SECURE CARV VENT PIPING TO VAULT WALL PER DETAIL X, SHEET X. SECURE CARV TO VAULT WALL WITH SST KINDORF BRACKETS AND HARDWARE.

GRAYLING ENGINEERS

City of St. Helens FOUNDED 1850

PRELIMINARY

Otak

Otak, Inc.
808 SW Third Avenue, Ste. 800
Portland, OR 97204
503. 287. 6825
www.otak.com

S. 1ST AND STRAND STREETS ROAD AND UTILITY EXTENSIONS

ST. HELENS, OREGON

PUMP STATION MECHANICAL PLAN

TITLE

#	DATE	DESCRIPTION

REVISIONS

DATUM

GRAYLING CAD — KL###
DRAWN BY — CHECKED BY

90% DESIGN
STATUS

JANUARY 10, 2022
DATE

19823
PROJECT NUMBER

PS-5

© 2021 OTAK, INC.

If this drawing is not 22" x 34", it has been reduced/enlarged. Scale accordingly.

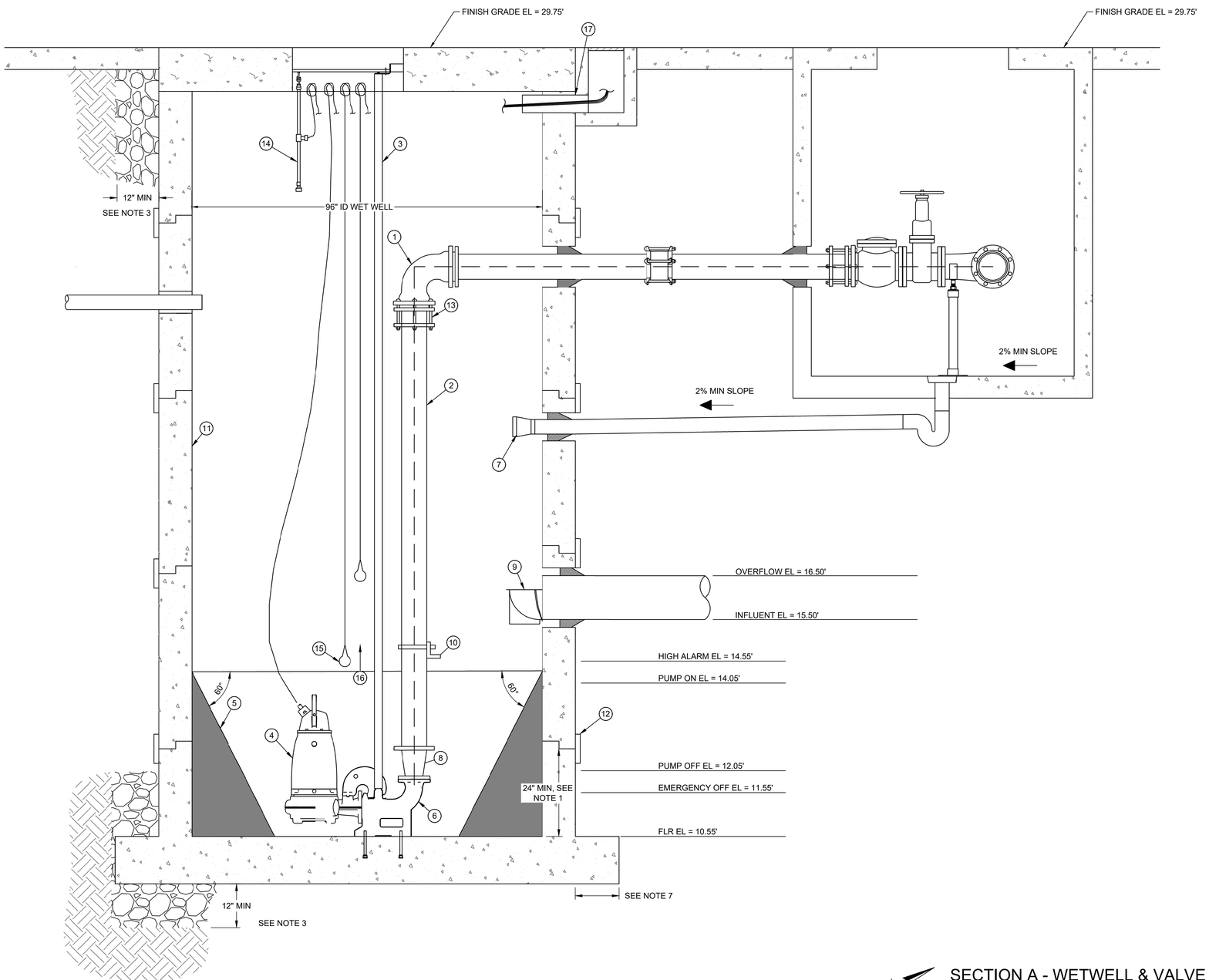

KEY NOTES

1. 6" DI MJ 90° BEND w/ JOINT RESTRAINTS
2. 6" DI PE x FL PIPE SEGMENT (TYP 2)
3. SST GUIDE RAIL BY PUMP MANUFACTURER (TYP 4)
4. FLYGT SUBMERSIBLE WASTEWATER PUMP (TYP 2) SUPPLY ONE PUMP W/ MIX-FLUSH VALVE
5. INSTALL CONCRETE FILLET AS REQUIRED BY PUMP MANUFACTURER
6. BASE ELBOW, 4" FL OUTLET (TYP 2), ANCHOR TO FLOOR PER MANUFACTURER RECOMMENDATIONS
7. 3" DUCKBILL STYLE CHECK VALVE CONNECTED TO 3" DI VAULT DRAIN PIPING
8. 6" X 4" DI FL REDUCER (TYP 2)
9. DROP BOWL, RELINER B10R96 OR APPROVED EQUAL
10. PIPE SUPPORT, SEE DETAIL X, SHEET X
11. EPOXY COATING SYSTEM, APPLY ON ALL INTERIOR CONCRETE SURFACES
12. 8" NPC EXTERNAL SEAL OR APPROVED EQUAL. INSTALL ON WET WELL JOINTS
13. 6" RFCA (TYP 2)
14. ULTRASONIC LEVEL TRANSDUCER, SEE ELECTRICAL
15. FLOAT FOR HIGH WET WELL ALARM, SET AT EL = 14.55'
16. FLOAT FOR OVERFLOW ALARM, SET AT EL = 16.50'
17. CABLE TRENCH ENTRANCE, ROTATED FOR CLARITY, SEE DETAIL X, SHEET X

NOTES

1. WET WELL BASE SECTION SHALL BE CAST WITH A WALL SECTION TO ALLOW FOR WATER TIGHT SEAL TO BE PLACED ON EXTERIOR SIDE OF JOINT.
2. CONTRACTOR RESPONSIBLE FOR ALL REQUIRED SHORING AND DEWATERING DESIGN. SUBMIT CALCULATIONS FOR THE SHORING AND DEWATERING DESIGN, STAMPED AND SIGNED BY AN ENGINEER LICENSED IN THE STATE OF OREGON.
3. BACKFILL STRUCTURES WITH 1.5"-0" DENSE GRADED AGGREGATE COMPACTED TO 95% MAX DENSITY PER AASHTO T 180 TESTING METHODS.
4. ALL HARDWARE INSIDE THE WET WELL AND VAULT SHALL BE EITHER TYPE 316 SST OR COATED IN A BAKED-ON, CERAMIC-FILLED FLUOROCARBON RESIN.
5. ALL CONCRETE STRUCTURE PIPE PENETRATIONS SHALL BE FIELD CORED.
6. PIPE AND FITTINGS IN VAULTS AND WET WELL TO BE COATED PER THE SPECIFICATIONS.
7. THE CONTRACTOR SHALL BE RESPONSIBLE FOR DETERMINING THE SIZE AND CONSTRUCTION METHOD OF THE EXTENDED BASE, WHICH WILL BE NECESSARY TO COUNTERACT BUOYANCY FORCES. SEE SPECIFICATIONS, SECTION X.
8. INFLUENT SEWER ROTATED FOR CLARITY.

SECTION A - WETWELL & VALVE VAULT

SCALE: 3/4" = 1'-0"

GRAYLING ENGINEERS

City of St. Helens
FOUNDED 1850

PRELIMINARY

Otak
Otak, Inc.
808 SW Third Avenue, Ste. 800
Portland, OR 97204
503. 287. 6825
www.otak.com

S. 1ST AND STRAND STREETS ROAD AND UTILITY EXTENSIONS
ST. HELENS, OREGON

PUMP STATION SECTION A - WETWELL & VAULT

TITLE

#	DATE	DESCRIPTION

REVISIONS

DATUM

GRAYLING CAD KL/###
DRAWN BY CHECKED BY

90% DESIGN
STATUS

JANUARY 10, 2022
DATE

19823
PROJECT NUMBER

PS-6

© 2021 OTAK, INC.

If this drawing is not 22" x 34", it has been reduced/enlarged. Scale accordingly.

Plotted: Jan 10, 2022 - 8:58am Hallies Dunn G:\Shared drives\Grayling\Projects\2105A 1st and Strand Utility Improvements\500 CAD\501 Plan Sheets\2105A PUMP STATION MECHANICAL PLAN.dwg Layout Name: PS-5 PUMP STATION SECTION A - WETWELL & VAULT

KEY NOTES

1. PIPE SUPPORT, STANDON MODEL S92, OR APPROVED EQUAL, SEE DETAIL X (TYP X)
2. 8" FLOOR DRAIN W/ P-TRAP AND SST COVER
3. LOCATOR STATION, SEE DETAIL X, SHEET X
4. CORE IN FIELD AND INSTALL KOR-N-SEAL BOOT, OR APPROVED EQUAL
5. H-20 RATED TRIPLE LEAF ACCESS HATCH w/ DIAPHRAGM SEAL AND CHANNEL DRAIN
6. 1-1/4" SCH 40 PVC FROM HATCH TO DRAIN ALONG VAULT WALL TO FLOOR, DIRECT OUTLET TO VAULT DRAIN, ANCHOR PIPE TO WALL PER DETAIL X, SHEET X.

NOTES

1. BACKFILL STRUCTURES WITH 1.5" - 0" DENSE GRADED AGGREGATE COMPACTED TO 95% MAX DENSITY PER AASHTO T 180 TESTING METHODS.
2. ALL CONCRETE STRUCTURE PIPE PENETRATIONS SHALL BE FIELD CORED.
3. PIPE AND FITTINGS IN VAULTS AND WET WELL TO BE COATED PER SPECIFICATIONS.

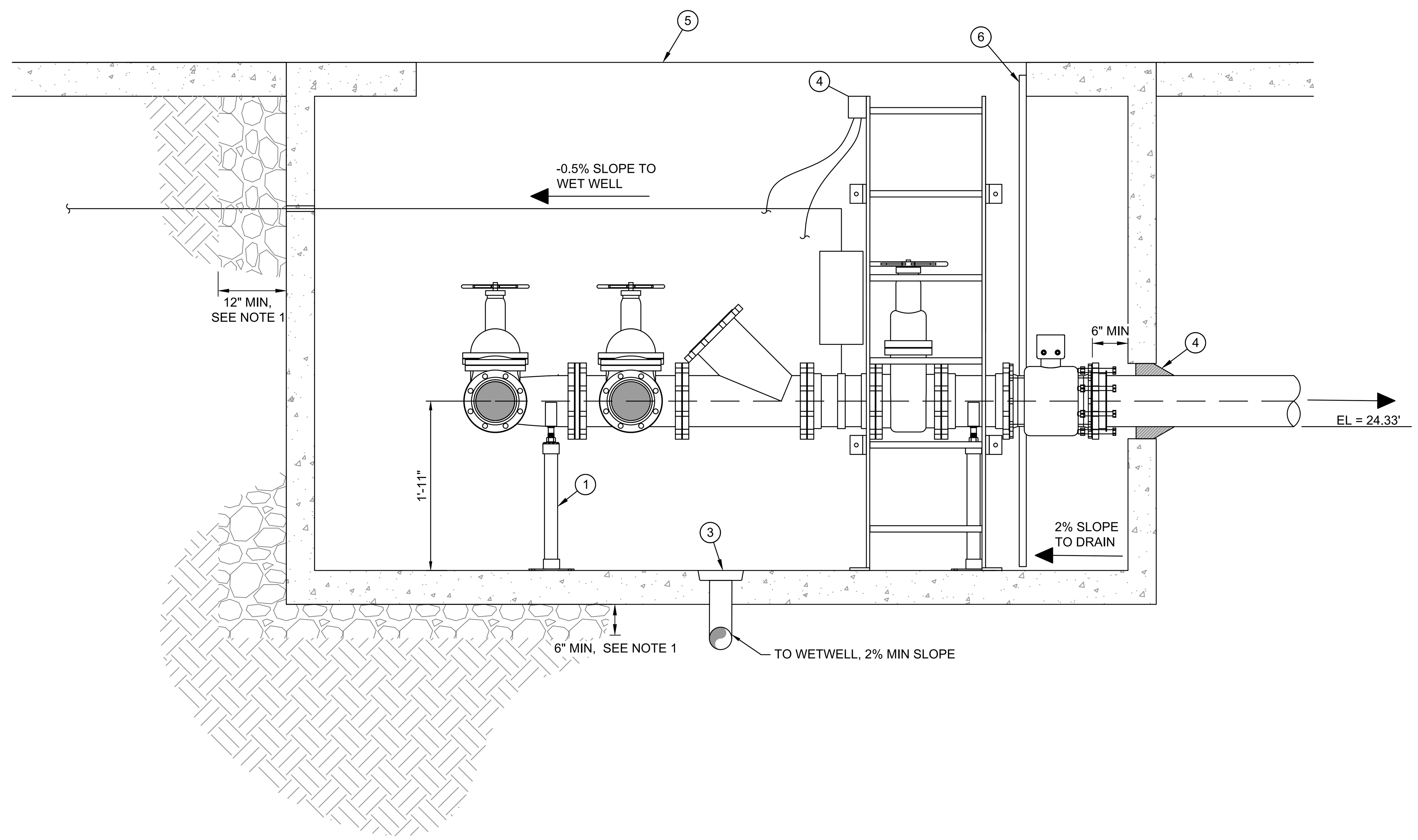

SECTION B - VALVE VAULT

SCALE: 3/4" = 1'-0"

GRAYLING ENGINEERS

City of St. Helens FOUNDED 1850

PRELIMINARY

Otak
Otak, Inc.
808 SW Third Avenue, Ste. 800
Portland, OR 97204
503. 287. 6825
www.otak.com

S. 1ST AND STRAND STREETS ROAD AND UTILITY EXTENSIONS

ST. HELENS, OREGON

PUMP STATION SECTION B - VAULT

TITLE

#	DATE	DESCRIPTION

REVISIONS

DATUM

GRAYLING CAD — DRAWN BY

KL### — CHECKED BY

90% DESIGN — STATUS

JANUARY 10, 2022 — DATE

19823 — PROJECT NUMBER

PS-7

© 2021 OTAK, INC.

If this drawing is not 22" x 34", it has been reduced/enlarged. Scale accordingly.

Plotted: Jan 10, 2022 - 8:58am Hailee Dunn G:\Shared drives\Grayling\Projects\2105A 1st and Strand Utility Improvements\500 CAD\501 Plan Sheets\2105A PUMP STATION MECHANICAL PLAN.dwg Layout Name: PS-6 PUMP STATION SECTION B - VAULT

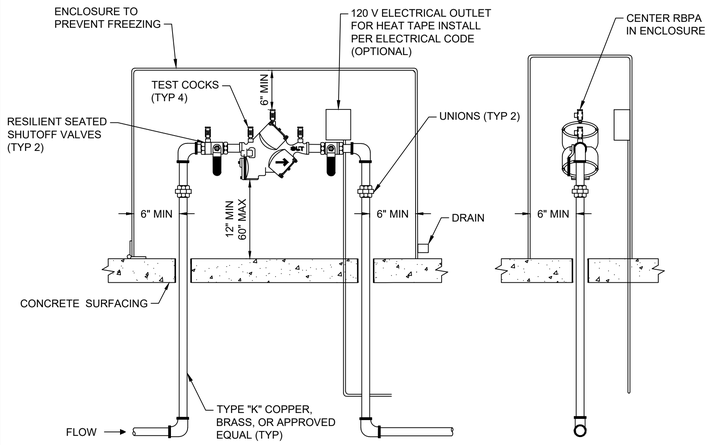

NOTES:

1. APPROVED REDUCED PRESSURE BACKFLOW ASSEMBLY (RBPA) TO LAY HORIZONTAL WITH GROUND. (VERTICAL ALLOWED IF APPROVED BY OR. HEALTH AUTHORITY).
2. DESIGN RBPA FOR BACK SIPHONAGE AND BACK PRESSURE.
3. THOROUGHLY FLUSH LINES PRIOR TO INSTALLATION OF BACKFLOW PREVENTER.
4. DO NOT INSTALL IN AN AREA SUBJECT TO FLOODING.
5. RBPA MUST BE ACCESSIBLE.
6. PROTECT RPBA FROM FREEZING.
7. A PLUMBING PERMIT IS REQUIRED - CONTACT THE APPROPRIATE JURISDICTION'S PERMITS COUNTER.
8. RPBA MUST BE TESTED AFTER INSTALLATION, THEN ANNUALLY BY A OR. STATE CERTIFIED BACKFLOW TESTER. RESULTS SHALL BE SENT TO THE CITY WATER QUALITY SERVICES.
9. RPBA SHALL BE APPROVED BY THE STATE OF OREGON.
10. DRAIN SHALL BE SIZED PER THE AWWA CROSS CONNECTION CONTROL MANUAL.
11. RPBA MUST BE RETESTED IF MOVED OR REPAIRED.
12. AS OF JANUARY 4, 2014 ALL NEWLY INSTALLED FITTINGS IN CONTACT WITH WATER SHALL BE IN COMPLIANCE WITH THE REVISED SECTION 1417 OF THE EPA SAFE WATER DRINKING ACT AND CERTIFIED LEAD FREE USING NSF 372 STANDARDS.
13. CONTRACTOR TO SIZE ENCLOSURE.
14. ENCLOSURE TO BE FASTENED TO CONCRETE PAD w/ STAINLESS STEEL HARDWARE.

1 - STANDARD REDUCED PRESSURE PRINCIPLE BACKFLOW ASSEMBLY
NTS

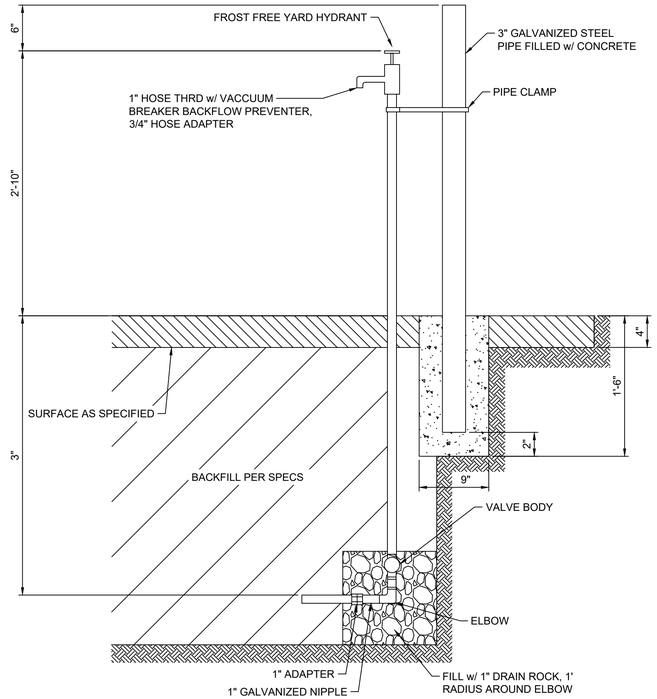

2 - YARD HYDRANT
NTS

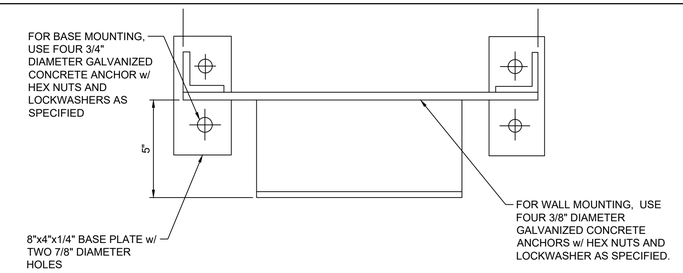

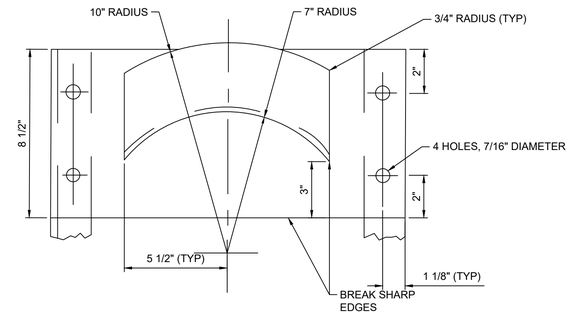

NOTES:

1. WHERE THE HOSE RACK IS FREE-STANDING, PROVIDE TWO STEEL ANGLES 2 x 2 x 1/4 w/ BASE PLATES (OMIT BASE PLATES WHERE ANGLES CAN BE SET IN CONCRETE).
2. ALL WELDED CONSTRUCTION. 8 GAUGE STEEL SHEET GALVANIZED AFTER FABRICATION.
3. COORDINATE FINAL LOCATION OF HOSE RACK w/ OWNER.

3 - HOSE RACK
NTS

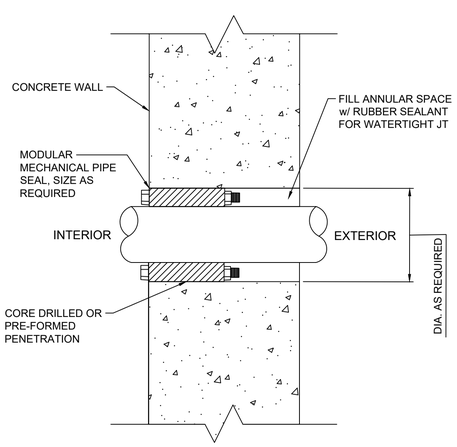

4 - PIPE SEAL
NTS

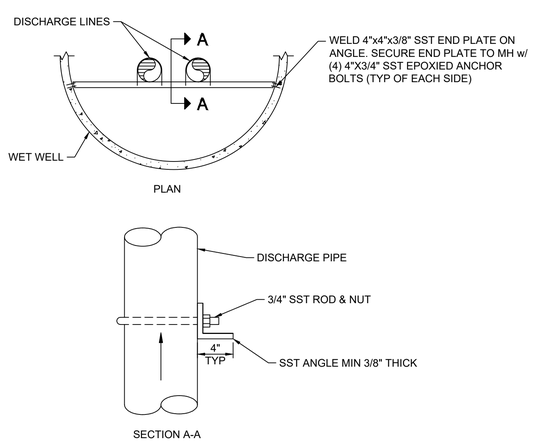

NOTES:

1. WET WELL SUPPORT SHOWN. VALVE VAULT SUPPORT CONFIGURATIONS FOR ONE DISCHARGE LINE.

5 - DISCHARGE PIPE SUPPORT
NTS

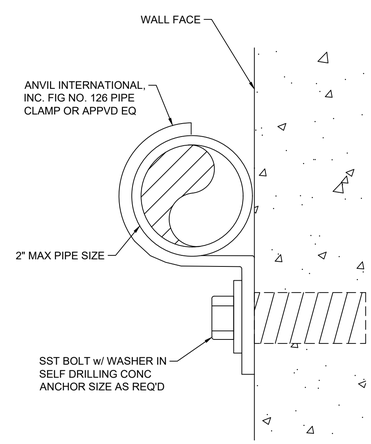

NOTES:

1. WHEN USED WITH PVC OR FIBERGLASS PIPE, PROVIDE STEEL SHIELD AROUND PIPE AT CLAMP w/ LOOSE FIT. WRAP COPPER TUBES w/ 2" WIDE STRIP OF NEOPRENE FABRIC.
2. PROVIDE CLAMP AT ALL CHANGES IN DIRECTION AND AT TWO (2) FOOT INTERVALS ON STRAIGHT RUNS.

6 - PIPE CLAMP FOR INDIVIDUAL PIPES
NTS

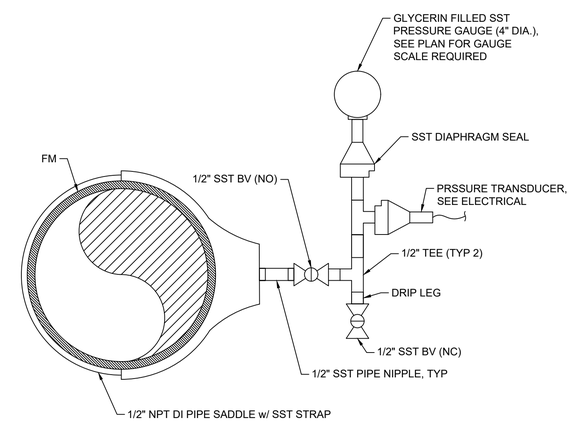

NOTES:

1. ALL PIPE AND FITTINGS SHALL BE SCHEDULE 80 STAINLESS STEEL WITH THREADED ENDS.
2. INSTALL PRESSURE GAUGE AND DIAPHRAGM SEAL PER MANUFACTURER'S REQUIREMENTS.
3. ORIENT GAUGE SO IT CAN BE READ FROM THE GROUND SURFACE.

7 - PRESSURE GAUGE ASSEMBLY
NTS

GRAYLING ENGINEERS

PRELIMINARY

Otak

Otak, Inc.
808 SW Third Avenue, Ste. 800
Portland, OR 97204
503. 287. 6825
www.otak.com

S. 1ST AND STRAND STREETS ROAD AND UTILITY EXTENSIONS

ST. HELENS, OREGON

PUMP STATION DETAILS I

TITLE

#	DATE	DESCRIPTION

REVISIONS

DATUM

GRAYLING CAD KL/###

DRAWN BY CHECKED BY

90% DESIGN

STATUS

JANUARY 10, 2022

DATE

19823

PROJECT NUMBER

PS-8

© 2021 OTAK, INC.

If this drawing is not 22" x 34", it has been reduced/enlarged. Scale accordingly.

Plotted: Jan 10, 2022 - 9:01am, Hallie Dunn G:\Shared drives\Grayling\Projects\21054_1st and Strand Utility Improvements\500-CAD\501 Plan Sheets\21054 Standard Details.dwg Layout Name: PS-8 PUMP STATION DETAILS I

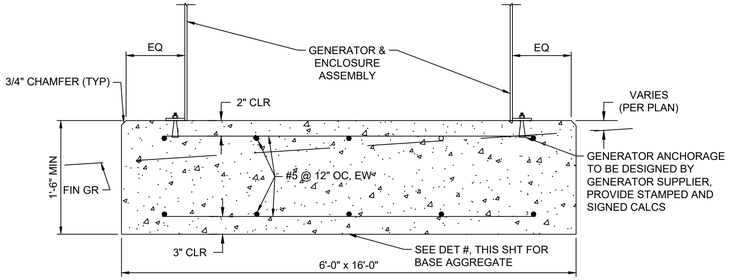

1 GENERATOR FOUNDATION
NTS

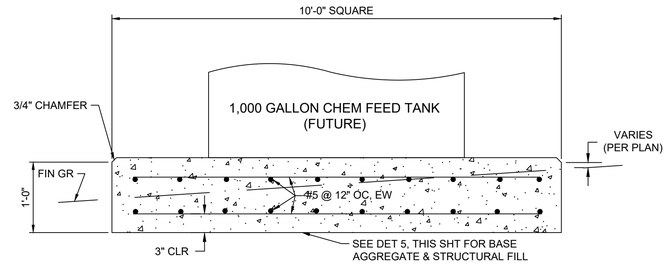

2 CHEMICAL TANK FOUNDATION
NTS

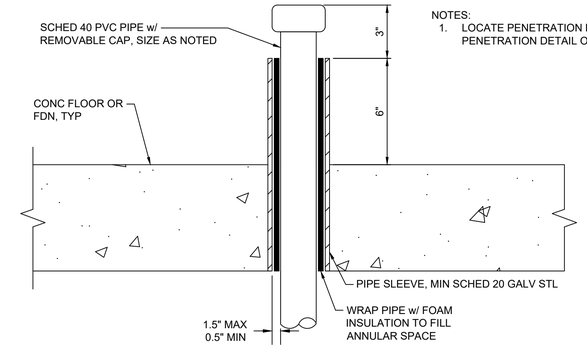

NOTES:
1. LOCATE PENETRATION PER SLAB PENETRATION DETAIL ON SHEET M-4.

3 CHEMICAL FEED CASING PENETRATION
NTS

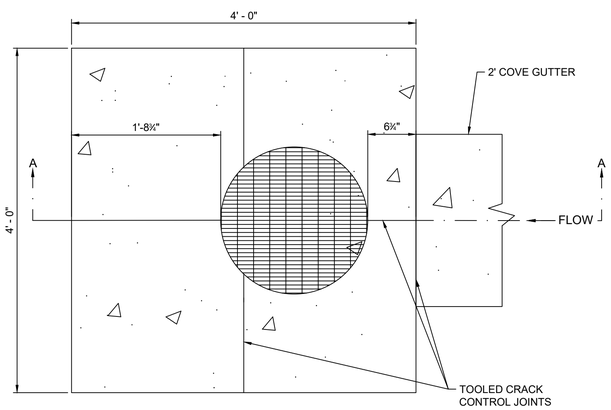

PLAN

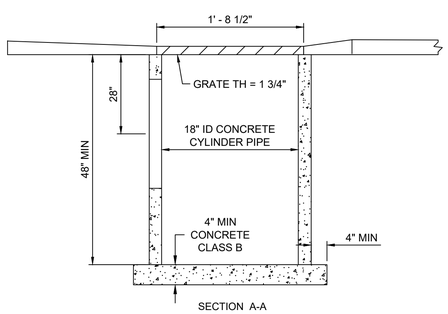

4 AREA DRAIN
NTS

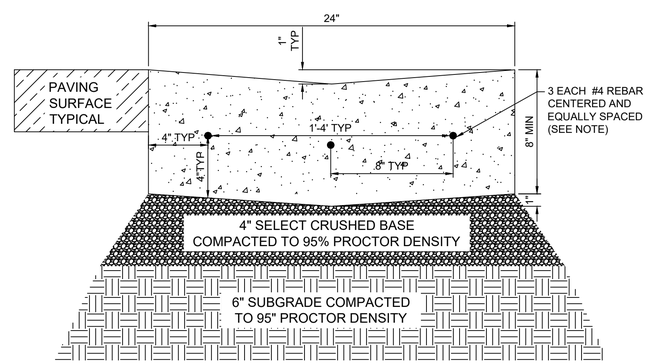

5 2' COVE GUTTER
NTS

NOTES:
1. CONSTRUCTION JOINTS SHALL BE PLACED EVERY TEN (10') FEET AND SHALL BE ONE-FOURTH (1/4) THE CONCRETE THICKNESS OR A MINIMUM OF ONE (1") INCH DEEP.

2. EXPANSION JOINTS OF ONE-HALF (1/2") INCH MASTIC MATERIAL SHALL BE PLACED AT THE FOLLOWING LOCATIONS:
   - 2.1. P.C.s AND P.T.s OF CURVES.
   - 2.2. GRADE BREAKS
   - 2.3. FOUR (4') FEET ON EITHER SIDE OF A DRAINAGE STRUCTURE.
   - 2.4. AT OTHER LOCATIONS AS SPECIFIED BY A CITY ENGINEER.
   - 2.5. EXPANSION JOINT MAY BE ELIMINATED FOR EXTRUDED CURB w/ APPROVAL OF CITY ENGINEER.

3. REINFORCING BAR (REBAR) SHALL BE #4 (1/2"), THREE (3) EACH, EQUALLY SPACED (EIGHT (8") TYPICAL) w/ #4 SPREADERS TIED EVERY FIVE (5') FEET, EQUALLY SPACED AND TYPICALLY FOUR (4") INCHES (MINIMUM THREE (3") INCHES) OF PORTLAND CEMENT CONCRETE COVERING REBAR IN ALL LOCATIONS.

4. REINFORCING BAR (REBAR) SHALL BE PLACED AND SUPPORTED UTILIZING "CHAIRS" FOR SUCH PURPOSE.

GRAYLING ENGINEERS

PRELIMINARY

Otak, Inc.
808 SW Third Avenue, Ste. 800
Portland, OR 97204
503. 287. 6825
www.otak.com

S. 1ST AND STRAND STREETS ROAD AND UTILITY EXTENSIONS
ST. HELENS, OREGON

PUMP STATION DETAILS II

TITLE

#	DATE	DESCRIPTION

REVISIONS

DATUM

GRAYLING CAD KL/###
DRAWN BY CHECKED BY

90% DESIGN
STATUS

JANUARY 10, 2022
DATE

19823
PROJECT NUMBER

PS-9

© 2021 OTAK, INC.

If this drawing is not 22" x 34", it has been reduced/enlarged. Scale accordingly.

Plotted: Jan 10, 2022 - 9:02am Hallie Dunn G:\Shared drives\Grayling\Projects\21054 1st and Strand Utility Improvements\500 CAD\501 Plan Sheets\21054 Standard Details.dwg Layout Name: PS-3 PUMP STATION DETAILS II

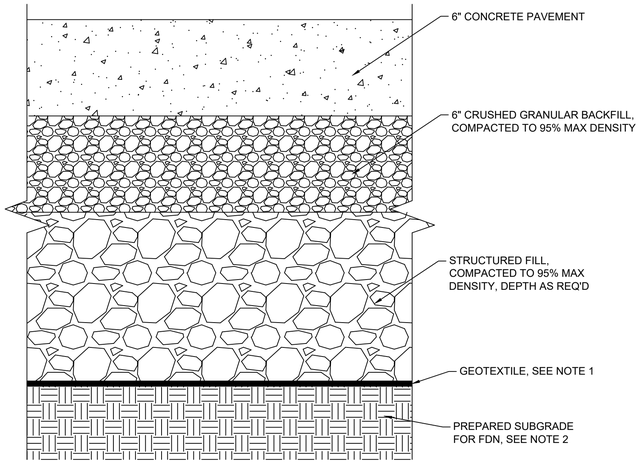

NOTES:
1. GEOTEXTILE SHALL BE MIRAFI 500X, OR APPROVED EQUAL.
2. REMOVE 18" MINIMUM OF EXISTING SURFACING.

1 - CONCRETE PAVEMENT SECTION
NTS

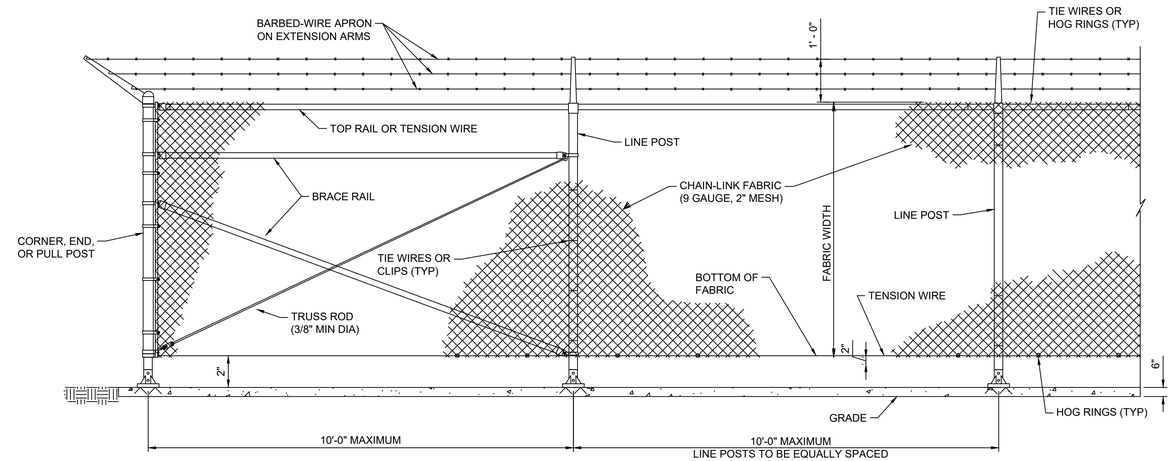

2 - CHAIN-LINK SECURITY FENCE
NTS

GRAYLING ENGINEERS

PRELIMINARY

Otak

Otak, Inc.
808 SW Third Avenue, Ste. 800
Portland, OR 97204
503. 287. 6825
www.otak.com

S. 1ST AND STRAND STREETS ROAD AND UTILITY EXTENSIONS

ST. HELENS, OREGON

PUMP STATION DETAILS III

TITLE

#	DATE	DESCRIPTION

REVISIONS

DATUM

GRAYLING CAD KL/###
DRAWN BY CHECKED BY

90% DESIGN
STATUS

JANUARY 10, 2022
DATE

19823
PROJECT NUMBER

PS-10

© 2021 OTAK, INC.

If this drawing is not 22" x 34", it has been reduced/enlarged. Scale accordingly.

Plotted: Jan 10, 2022 - 9:03am Hallee Dunn G:\Shared drives\Grayling\Projects\21054 1st and Strand Utility Improvements\500 CAD\501 Plan Sheets\21054 Standard Details.dwg Layout Name: PS-10 PUMP STATION DETAILS III

GENERAL PLUMBING NOTES

1. ALL PIPE (WATER, SEWER, VENT), JOINTS, AND WORK SHALL CONFORM TO INTERNATIONAL PLUMBING CODE, STATE CODES, COUNTY AND LOCAL CODES AND ORDINANCES.
2. CONTRACTOR TO CONFIRM LOCATIONS OF SEWER AND WATER TIE-INS.
3. CONTRACTOR TO SOLIDLY BRACE ALL PIPING TIGHT AGAINST WALLS. FOR LONG OR COMPLICATED RUNS, SECURELY MOUNT USING UNISTRUT. IN STRAIGHT AND UNIFORM MANNER FOR FINISHED APPEARANCE. PIPING SHOWN IS DIAGRAMMATIC ONLY AND ACTUAL DESIGN BY CONTRACTOR.
4. CONTRACTOR MAY CHANGE PIPE SIZING IN FIELD TO PROVIDE ADEQUATE WATER PRESSURE TO ALL PLUMBING FIXTURES AS APPROVED BY INSPECTOR.
5. CONTRACTOR TO DETERMINE AND PROVIDE MEANS FOR DRAINING INTERIOR WATER AND SANITARY SEWER SYSTEMS, AS WELL AS SHUTOFF OF ALL FIXTURES.
6. WHEN FIXTURES REQUIRE WALL CARRIERS THE WALL CARRIER SHALL BE SUPPLIED BY CONTRACTOR.
7. PROVIDE CLEAN-OUT BENEATH ALL SINKS AS REQUIRED BY CODE.

MECHANICAL NOTES

1. TO FOLLOW

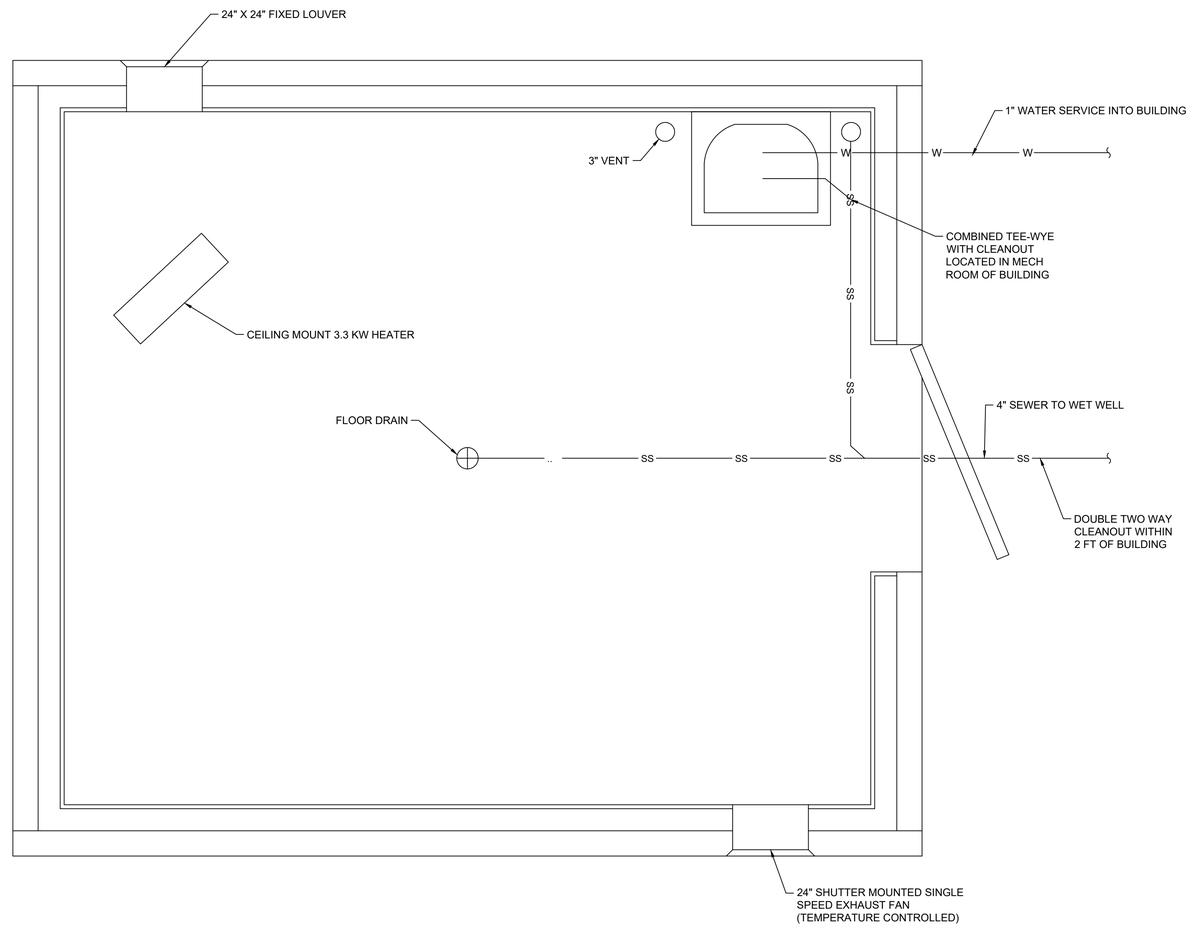

PLUMBING AND MECHANICAL PLAN

SCALE: 1" = 1'-0"

GRAYLING ENGINEERS

PRELIMINARY

Otak

Otak, Inc.
808 SW Third Avenue, Ste. 800
Portland, OR 97204
503. 287. 6825
www.otak.com

S. 1ST AND STRAND STREETS ROAD AND UTILITY EXTENSIONS

ST. HELENS, OREGON

PLUMBING AND MECHANICAL PLAN

TITLE

#	DATE	DESCRIPTION

REVISIONS

DATUM

GRAYLING CAD — KLT
DRAWN BY — CHECKED BY

90% DESIGN
STATUS

JANUARY 10, 2022
DATE

19823
PROJECT NUMBER

PS-11

© 2021 OTAK, INC.

If this drawing is not 22" x 34", it has been reduced/enlarged. Scale accordingly.

Plotted: Jan 10, 2022 - 9:07am Hallie Dunn G:\Shared drives\Grayling\Projects\21054 1st and Strand Utility Improvements\500 CAD\501 Plan Sheets\21054 GENERAL PLUMBING NOTES.dwg Layout Name: PS-11 PLUMBING AND MECHANICAL PLAN

ELECTRICAL LEGEND AND ABBREVIATIONS

SYMBOL	DESCRIPTION
S/N	SOLID NEUTRAL CONNECTION
G N	GROUNDING AND NEUTRAL LUGS
GFI WP	DUPLEX RECEPTACLE–NORMAL, GROUND FAULT INTERRUPTING
	CONNECTION TO SPECIAL EQUIPMENT OR OUTLET AS SHOWN
225	TRANSFER SWITCH, CURRENT RATING SHOWN
	GENERATOR SET
5	MOTOR OUTLET, HORSEPOWER INDICATED.
30 30	DISCONNECT SWITCH, RATING SHOWN
	ELECTRICAL EQUIPMENT
	ELECTRICAL EQUIPMENT TO BE DEMO'D
	LINE OR LOAD REACTOR
	CONDUIT SEAL–OFF
J	JUNCTION BOX
$WP	LIGHT SWITCH W/ WEATHERPROOF COVER
P4	HOME RUN, ELECTRICAL PANEL DESTINATION SHOWN.
	CONDUIT CONCEALED UNDERFLOOR OR UNDERGROUND.*
	CONDUIT CONCEALED IN WALL OR ABOVE CEILING IN FINISHED AREAS, EXPOSED IN PROCESS AND EQUIPMENT AREAS.*

*NOTES:

1. RUNS MARKED WITH CROSS–HATCHES INDICATE NUMBER OF NO. 12 WIRE. LARGER GAUGES ARE SHOWN OR NOTED ELSEWHERE. LONG CROSS HATCH INDICATES NEUTRAL, REVERSE SLANT INDICATES GREEN GROUND WIRE.
2. FOR UNMARKED CONDUIT RUNS, CONTRACTOR SHALL INSTALL REQUIRED NUMBER OF WIRES FOR POWER AND/OR CONTROL OF ELEMENTS IN CIRCUIT(S) SHOWN. SIZE OF WIRE SHALL BE NO. 12, UNLESS OTHERWISE NOTED OR REQUIRED BY CODE.
3. SIZE CONDUIT ACCORDING TO SPECIFICATIONS AND APPLICABLE CODE.

SYMBOL	DESCRIPTION
	CURRENT TRANSFORMER
	TRANSFORMER
	GROUND CONNECTION PER NEC ARTICLE 250
	THERMAL MAGNETIC CIRCUIT BREAKER
15AC 400AT	MAGNETIC ONLY CIRCUIT BREAKER (MOTOR CIRCUITS ONLY) CONTINUOUS CURRENT RATING AND TRIP SETTINGS SHOWN
	NEMA RATED CONTACTOR WITH MOTOR THERMAL OVERLOAD RELAY (MOTOR STARTER)
400AT	FUSE
X	DRAWING NOTE
1	ELECTRICAL CIRCUIT IDENTIFICATION
1 2 3 4	MULTIPLE ELECTRICAL CIRCUITS, SEPARATE CONDUITS
1"C 1 2 3 4	MULTIPLE ELECTRICAL CIRCUITS, COMMON CONDUIT (SIZE SHOWN)

A	AMPERES, AMPS
AC	ALTERNATING CURRENT, AMPS CONTINUOUS
AF	AMP FRAME
AFCI	ARC–FAULT CIRCUIT INTERRUPTER
AFD	ADJUSTABLE FREQUENCY DRIVE
AFF	ABOVE FINISHED FLOOR
AFG	ABOVE FINISHED GRADE
AHU	AIR HANDLING UNIT
AIC	AMPERE INTERRUPTING CAPACITY
AL	ALUMINUM, ALARM
AM	AMMETER
ANT	ANTENNA
ARCH	ARCHITECT
AS	AMP SWITCH
ASD	ADJUSTABLE SPEED DRIVE
AT	AMP TRIP
ATS	AUTOMATIC TRANSFER SWITCH
AUD	AUDIOMETER BOX CONNECTION
AUX	AUXILIARY
AWG	AMERICAN WIRE GAUGE
BFF	BELOW FINISHED FLOOR
BFG	BELOW FINISHED GRADE
BLDG	BUILDING
BTCW	BARE TINNED COPPER WIRE
C	CONDUIT, CONTROL, CONTINUOUS
CAM	CAMERA
CAT	CATALOG
CATV	CABLE TELEVISION
CB	CIRCUIT BREAKER
CC	CONTROL CABLE
CCTV	CLOSED–CIRCUIT TELEVISION
CHH	COMMUNICATIONS HANDHOLE
CKT	CIRCUIT
CMH	COMMUNICATIONS MANHOLE
CNTRL, CTRL	CONTROL
CO	CONDUIT ONLY
COL	COLUMN
CONT	CONTINUOUS, CONTROL
CP	CONTROL PANEL
CPT	CONTROL POWER TRANSFORMER
CR	CONTROL RELAY
CT	CURRENT TRANSFORMER
CU	COPPER
CV	CONTROL VAULT, CHECK VALVE
CVLS	CHECK VALVE LIMIT SWITCH
D, DISC	DISCONNECT
DC	DIRECT CURRENT
DEMO	DEMOLISH
DET	DETECTOR
DIST	DISTRIBUTION
DN	DOWN
DT	DUST–TIGHT
DWG	DRAWING
E	EMERGENCY, EMERGENCY CIRCUIT
(E), EXIST	EXISTING
EA	EACH
EC	ELECTRICAL CONTRACTOR
EF	EXHAUST FAN
EL, ELEV	ELEVATION, ELEVATOR
ELEC	ELECTRIC(AL)
EMER	EMERGENCY, EMERGENCY CIRCUIT
EMT	ELECTRICAL METALLIC TUBING
ENCL	ENCLOSURE
ENT	ELECTRICAL NON–METALLIC TUBING
EOL	END OF LINE
EP	EXPLOSION PROOF
EPO	EMERGENCY POWER OFF
EQUIP	EQUIPMENT
ES, E–STOP	EMERGENCY STOP
ETM	ELAPSED TIME METER
EWC	ELECTRIC WATER COOLER
EWH	ELECTRIC WATER HEATER
F	FLUSH, FUSE
FA	FIRE ALARM
FBO	FURNISHED BY OTHERS
FC	FIRE PROTECTION CONTRACTOR
FCU	FAN COIL UNIT
FDN	FOUNDATION
FDR	FEEDER
FIXT	FIXTURE
FLA	FULL LOAD AMPS
FLEX	FLEXIBLE
FLR	FLOOR
FLUOR	FLUORESCENT
FMC	FLEXIBLE METALLIC CONDUIT
FNC	FLEXIBLE NON–METALLIC CONDUIT
FRE	FIBERGLASS REINFORCED EPOXY CONDUIT
FU	FUSE
FURN	FURNITURE
FVNR	FULL VOLTAGE NON–REVERSING
FVR	FULL VOLTAGE REVERSING
G, GND	GROUND
GC	GENERAL CONTRACTOR
GEN	GENERATOR
GFCI	GROUND FAULT CIRCUIT INTERRUPTER
GFI	GROUND FAULT INTERRUPTER
GFPE	GROUND FAULT PROTECTION EQUIPMENT
GFR	GROUND FAULT RELAY
GRC	GALVANIZED RIGID CONDUIT
GRS	GALVANIZED RIGID STEEL CONDUIT
H	HORN
HH	HANDHOLE
HID	HIGH INTENSITY DISCHARGE
HMI	HUMAN–MACHINE INTERFACE
HOA	HAND–OFF–AUTOMATIC
HP	HORSEPOWER, HEAT PUMP
HPS	HIGH PRESSURE SODIUM
H–STAT	HUMIDISTAT
HT, HGT	HEIGHT
HV	HIGH VOLTAGE
HVAC	HEATING, VENTILATING, AND AIR CONDITIONING
HW	HOT WATER
HZ	HERTZ (CYCLE PER SECOND)
IAM	INDIVIDUAL ADDRESSABLE MODULE
IC	INTERRUPTING CAPACITY, INTERCOMMUNICATION
ID	IDENTIFICATION, INSIDE DIAMETER
IG	ISOLATED GROUND
IMC	INTERMEDIATE METALLIC CONDUIT
INC	INTERMEDIATE NON–METALLIC CONDUIT, INCANDESCENT
IPS	INTERRUPTIBLE POWER SUPPLY
IR	PASSIVE INFRARED
IR, ISR	INTRINSICALLY SAFE RELAY
J, JB	JUNCTION BOX
K	KEY INTERLOCK (KIRK–KEY)
K/O	KNOCK–OUT
KCMIL	THOUSAND CIRCULAR MILS
KVA	KILOVOLT AMPERE
KVAR	KILOVOLT AMPERE REACTIVE
KW	KILOWATT
LA	LIGHTNING ARRESTER
LC	LIGHTING CONTACTOR
LDR	LOAD RELAY
LFMC	LIQUIDTIGHT FLEXIBLE METALLIC CONDUIT
LFNC	LIQUIDTIGHT FLEXIBLE NON–METALLIC CONDUIT
LOR	LOCAL–OFF–REMOTE
LOS	LOCKOUT STOP
LP	LIGHTING PANELBOARD
LR	LIGHTING RELAY
LTG	LIGHTING
LV	LOW VOLTAGE
M	MAGNETIC CONTACTOR COIL
MAINT	MAINTAINED
MAU	MAKE–UP AIR UNIT
MAX	MAXIMUM
MC	METAL CLAD CABLE
MCB	MAIN CIRCUIT BREAKER
MCC	MOTOR CONTROL CENTER
MCP	MOTOR CIRCUIT PROTECTOR
MD	MOTORIZED DAMPER
MDP	MAIN DISTRIBUTION PANEL
MFR, MANUF	MANUFACTURER
MH	MANHOLE, METAL HALIDE
MISC	MISCELLANEOUS
MLO	MAIN LUGS ONLY
MOD	MOTOR OPERATED DISCONNECT SWITCH
MS	MOTOR STARTER
MTD	MOUNTED
MTG	MOUNTING
MTS	MANUAL TRANSFER SWITCH
N	NEUTRAL
(N)	NEW
N/A	NOT APPLICABLE
NA	NON–AUTOMATIC
NC	NORMALLY CLOSED, NON–CONTINOUS
NEC	NATIONAL ELECTRICAL CODE
NECA	NATIONAL ELECTRICAL CONTRACTORS ASSOCIATION
NEUT	NEUTRAL
NF	NON–FUSED
NIC	NOT IN CONTRACT
NL	NIGHT LIGHT
NM	NON–METALLIC
NMC	NON–METALLIC SHEATHED CABLE
NO	NORMALLY OPEN
NRTL	NATIONALLY RECOGNIZED TESTING LAB
NTS	NOT TO SCALE
OD	OUTSIDE DIAMETER
OHD	OVERHEAD DOOR OPERATOR
OIT	OPERATOR INTERFACE TERMINAL
OL	OVERLOAD RELAY
OO	ON–OFF
P	POWER, POLE, PHASE, PANEL
PA	PUBLIC ADDRESS
PB	PULL BOX, PUSHBUTTON
PC	PHOTOCELL, PLUMBING SYSTEM CONTRACTOR
PE	PRIMARY ELECTRIC (SERVICE)
PFR	PHASE FAIL RELAY
PH or O	PHASE
PHH	POWER HANDHOLE
PIV	POST INDICATING VALVE
PMH	POWER MANHOLE
PMR	PHASE MONITOR RELAY
PNL	PANEL(BOARD)
PP	POWER PANEL
PR	PAIR
PRI	PRIMARY
PSI	PRESSURE
PT	POTENTIAL TRANSFORMER
PTT	PUSH–TO–TALK
PV	POWER VAULT, PHOTO–VOLTAIC (SOLAR CELL)
PVC	POLYVINYL CHLORIDE CONDUIT
PWR	POWER
R	RELAY
RE	REMOVE EXISTING
REC	RECESSED
RECP, RECEPT	RECEPTACLE
REF	ROOF EXHAUST FAN
RGS	RIGID GALVANIZED STEEL CONDUIT
RL	RELOCATE EXISTING
RM	ROOM
RMC	RIGID METALLIC CONDUIT
RNC	RIGID NON–METALLIC CONDUIT
RSC	RIGID STEEL CONDUIT
RT	RAINTIGHT
RTU	ROOFTOP UNIT
RVNR	REDUCED VOLTAGE NON–REVERSING
RVR	REDUCED VOLTAGE REVERSING
S	SOLENOID, SURFACE MOUNTED
SCADA	SUPERVISORY CONTROL AND DATA ACQUISITION
SCH	SCHEDULE
SD	SMOKE DAMPER
SE	SECONDARY ELECTRIC
SEC	SECONDARY
SIG	SIGNAL
SN, S/N	SOLID NEUTRAL
SP	SPARE
SPD	SPEED
SPKR	SPEAKER
SPL	SPLICE
SS	STAINLESS STEEL, SOLID–STATE
SSSS	SOLID–STATE SOFT STARTER
STL	CARBON STEEL
STP	SHIELDED TWISTED PAIR
SUSP	SUSPENDED
SV	SOLENOID VALVE
SW	SWITCH
SWBD	SWITCHBOARD
SWGR	SWITCHGEAR
T, T–STAT	THERMOSTAT
TB	TERMINAL BOARD
TC	TELEPHONE CABINET, TIME CLOSING
TC	TIME CLOCK, TIME CLOSING
TCI	TELECOMMUNICATIONS CABLING INSTALLER
TCP	TEMPERATURE CONTROL PANEL
TD	THERMAL DETECTOR
TDR	TIME DELAY RELAY
TEL	TELEPHONE
TEL/DATA	TELEPHONE/DATA
TEMP	TEMPORARY
TERM	TERMINAL(S)
TJB	TERMINAL JUNCTION BOX
TO	TIME OPENING
TR	TIMER–REPEAT CYCLE
TRANS	TRANSFORMER
TSP	TWISTED SHIELD(ED) PAIR
TST	TWISTED SHIELD(ED) TRIAD
TV	TELEVISION
TYP	TYPICAL
U	UP
UC	UNDER COUNTER, UNDERGROUND CONDUIT
UD	UP–DOWN
UG	UNDERGROUND
UH	UNIT HEATER
UOI	UNLESS OTHERWISE INDICATED
UON	UNLESS OTHERWISE NOTED
UOS	UNLESS OTHERWISE SHOWN
UPS	UNINTERRUPTIBLE POWER SOURCE
US, U/S	ULTRASONIC
UTL	UTILITY
UTP	UNSHIELDED TWISTED PAIR
UVR	UNDER VOLTAGE RELAY
V	VOLTAGE, VOLTS, VAULT
VFD	VARIABLE FREQUENCY DRIVE
VM	VOLT METER
VP	VAPORPROOF
VSD	VARIABLE SPEED DRIVE
VT	VAPORTIGHT, VOLTAGE TRANSFORMER
W	WATT
W/	WITH
WG	WIRE GUARD
WH	WATT–HOUR, WATER HEATER
WHD	WATT–HOUR DEMAND METER
WLH	WALL HEATER
WP	WEATHERPROOF
WT	WATER, WATERTIGHT
XFMR	TRANSFORMER
XP	EXPLOSION PROOF
Y	WYE
Z	ZONE
ZAM	ZONE ADAPTER MODULE

NOTES:

1. NOT ALL ABBREVIATIONS USED. ABBREVIATIONS LISTED APPLY TO ELECTRICAL AND INSTRUMENTATION DRAWINGS AND DETAILS. SOME ABBREVIATIONS MAY BE DERIVED FROM MULTIPLE, INDIVIDUAL ONES. LIST MAY BE INCOMPLETE; SEE NOTE 2.

2. MEANING OF ABBREVIATIONS WILL DEPEND ON THE CONTEXT OF USAGE. IF MEANING IS UNCLEAR, SEEK CLARIFICATION FROM ENGINEER BEFORE BIDDING. FAILURE TO UNDERSTAND ABBREVIATIONS AND THEIR POTENTIAL FINANCIAL IMPACT ON THE CONTRACTOR SHALL NOT BE GROUNDS FOR ADDITIONAL COMPENSATION AFTER BID OPENING.

3. COMMON, NON–ELECTRICAL ABBREVIATIONS, SUCH AS COMPASS DIRECTIONS (N, S, E, W, ETC.) AND CHEMICAL COMPOUNDS (O2, CL2, ETC.), ARE NOT INCLUDED.

4. ADDITIONAL ABBREVIATIONS FOR INSTRUMENTATION AND CONTROL ELEMENTS (FLOAT SWITCHES, ETC.) ARE DERIVED FROM ANSI/ISA–S5.1, AND ARE NOT NECESSARILY LISTED HERE.

R&W ENGINEERING, INC.
9615 S.W. Allen Boulevard
Suite 107
Beaverton, Oregon 97005
Phone: (503) 726-3314
Office: (503) 292-6000
E-mail: rweng@rweng.com
Project No.: 1655.002.001 Contact: MICHAEL FOSTER

CITY LOGO

REGISTERED PROFESSIONAL ENGINEER 18533 OREGON JULY 10, 1996 JEFFREY L. HOWARD
PRELIMINARY
EXPIRES 6/30/23

STAMP

Otak
Otak, Inc.
808 SW Third Avenue, Ste. 800
Portland, OR 97204
503. 287. 6825
www.otak.com

CONSULTANT

S. 1ST AND STRAND STREETS
ROAD AND UTILITY EXTENSIONS
ST. HELENS, OREGON
ELECTRICAL LEGEND AND ABBREVIATIONS

TITLE

#	DATE	DESCRIPTION

REVISIONS

DATUM

OTAK CAD
DRAWN BY — CHECKED BY

30% DESIGN
STATUS

AUGUST 4, 2021
DATE

19823
PROJECT NUMBER

E1.00

© 2021 OTAK, INC.
If this drawing is not 22" x 34", it has been reduced/enlarged. Scale accordingly.

Plotted: Dec 22, 2021 – 11:13am aminnick W:\WE1K\1655 Grayling Engineers\002 St Helens WW PS\001 Dsn\DWG\E1.00.dwg Layout Name: Layout1

LOAD SUMMARY

LOAD SUMMARY				DATE: 12/22/21	
QTY.	DESCRIPTION		LOAD		
	MOTOR LOADS	MOTOR SIZE			
1	PUMP NO. 1	15 HP	17.5 kVA		
1	PUMP NO. 2	15 HP	17.5 kVA		
	NON-MOTOR LOADS				
	MISC. (10kVA XFMR, 1-PH)		10.0 kVA		
	SUBTOTAL		44.9 kVA		
	LARGEST MOTOR x 25%		4.4 kVA		
	NON-MOTOR LOADS x 25%		2.5 kVA		
	SPARE CAPACITY (25%)		12.9 kVA		
	TOTAL:		64.7 kVA	77.9	AMPS
	SERVICE SIZE @ 480V, 3-PH:			100	AMPS

NOTES THIS SHEET

1. CB FOR SOFT STARTER TO BE SIZED PER MANUFACTURER'S RECOMMENDATIONS.
2. PROVIDE 100% RATED CIRCUIT BREAKER WITH SOLID-STATE ELECTRONIC TRIP. ELECTRONIC TRIP SHALL HAVE L, S, I, AND DELAY ADJUSTMENTS.
3. CONTRACTOR TO COORDINATE GENERATOR CIRCUIT BREAKER WITH ALL CIRCUIT BREAKERS IN MCC, PER NEC ARTICLE 70.
4. REMOVE NEUTRAL/GROUND BOND FROM GENSET. SYSTEM IS SOLIDLY GROUNDED THROUGH ATS AND IS NOT A SEPARATELY DERIVED SYSTEM.
5. AUTOMATIC TRANSFER SWITCH PROVIDED WITH SOLID NEUTRAL AND DELAYED TRANSFER OPTIONS.
6. TRANSFORMER AND LOW VOLTAGE PANEL PROVIDED BY PREFABRICATED BUILDING PROVIDER.
7. TRANSFORMER 'T1'. 480:240/120V, 10KVA, SINGLE PHASE, STEP DOWN TRANSFORMER.

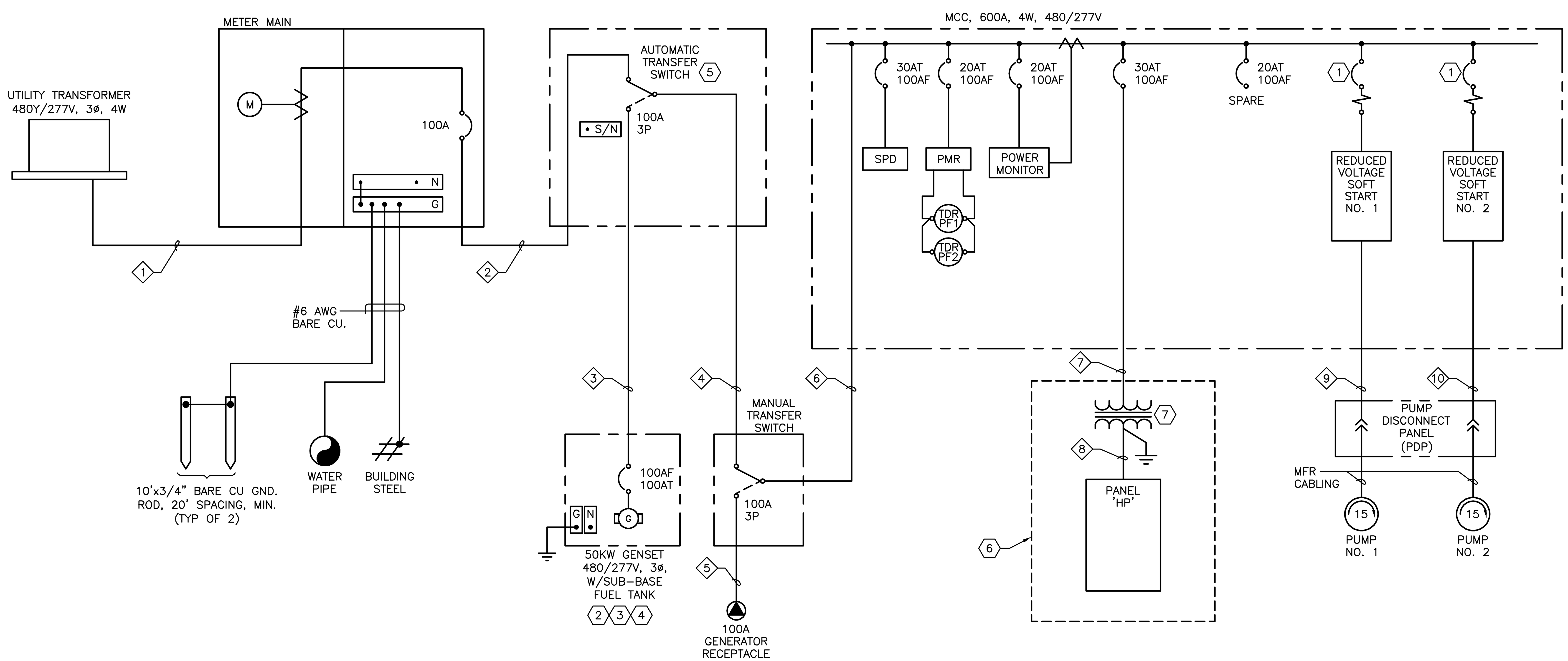

1 E2.00 ELECTRICAL ONE-LINE DIAGRAM
NOT TO SCALE

CITY LOGO

REGISTERED PROFESSIONAL ENGINEER 18533 OREGON JULY 10, 1996 JEFFREY L. HOWARD
PRELIMINARY
EXPIRES 6/30/23

STAMP

Otak

Otak, Inc.
808 SW Third Avenue, Ste. 800
Portland, OR 97204
503. 287. 6825
www.otak.com

CONSULTANT

S. 1ST AND STRAND STREETS ROAD AND UTILITY EXTENSIONS

ST. HELENS, OREGON

ELECTRICAL ONE-LINE, SCHEMATIC & DETAILS

TITLE

#	DATE	DESCRIPTION

REVISIONS

DATUM
OTAK CAD
DRAWN BY CHECKED BY
30% DESIGN
STATUS
AUGUST 4, 2021
DATE
19823
PROJECT NUMBER

E2.00

© 2021 OTAK, INC.

If this drawing is not 22" x 34", it has been reduced/enlarged. Scale accordingly.

R&W ENGINEERING, INC.
9615 S.W. Allen Boulevard
Suite 107
Beaverton, Oregon 97005
Phone: (503) 726-3314
Office: (503) 292-6000
E-mail: rweng@rweng.com
Project No.: 1655.002.001 Contact: MICHAEL FOSTER

Plotted: Dec 22, 2021 - 1:58pm amierick W:\WE1K\1655_Grayling Engineers\002_St. Helens WW PS\001_Des\DWG\E2.00.dwg Layout Name: Layout1

GENERAL NOTES

A. SEE ELECTRICAL SPECIFICATIONS FOR EQUIPMENT PART NUMBERS AND METHODS FOR INSTALLATION.

B. WET WELL INTERIOR IS A CLASS 1, DIVISION 1 HAZARDOUS (CLASSIFIED) AREA.

C. VALVE VAULT INTERIOR IS A CLASS 1, DIVISION 2 HAZARDOUS (CLASSIFIED) AREA.

NOTES THIS SHEET

1. COORDINATE GENERATOR STUB-UP LOCATION WITH MANUFACTURER.
2. PROVIDE (2) GROUND RODS FOR GROUNDING ELECTRODE SYSTEM. SEE SHEET E5.00 FOR ADDITIONAL DETAILS.
3. GENERATOR RECEPTACLE APPLETON MODEL ADR10034-RS. VERIFY RECEPTACLE MAKE/MODEL WITH CITY PERSONNEL.
4. CLASS 1, DIVISION 2 HAZARDOUS (CLASSIFIED) AREA EXTENDS IN AN ENVELOPE 18 -INCHES HIGH OUT TO 3-FT HORIZONTALLY FROM WET WELL HATCH.
5. SEAL-OFF RATED FOR CLASS 1, DIVISION 2 AREAS, IDENTIFIED FOR THE PURPOSE OF MINIMIZING THE PASSAGE OF GASES PER NEC 501.15(B)(2).
6. PROVIDE POWER CONNECTIONS TO GATE MOTOR, FIELD VERIFY LOCATION OF ELECTRICAL CONNECTION. ALERT ENGINEER OF ANY DISCREPANCIES.
7. STUB AND CAP CONDUITS TO ODOR CONTROL PAD FOR FUTURE USE.
8. UTILITY TRANSFORMER LOCATION TO BE COORDINATED WITH FINAL UTILITY DESIGN, COORDINATE ALL REQUIREMENTS WITH UTILITY.
9. PROVIDE ENCLOSURE FOR EXTERIOR LIGHT SWITCH CONTROLS, MOUNT PHOTOCELL ON TOP OF ROOF PER MANUFACTURER'S RECOMMENDATION. FIELD COORDINATE EXACT LOCATION. SEE DETAIL 5/E5.00 FOR MORE INFORMATION.
10. PROVIDE BOLLARDS FOR TRAFFIC PROTECTION OF UTILITY TRANSFORMER, COORDINATE REQUIREMENTS WITH UTILITY.

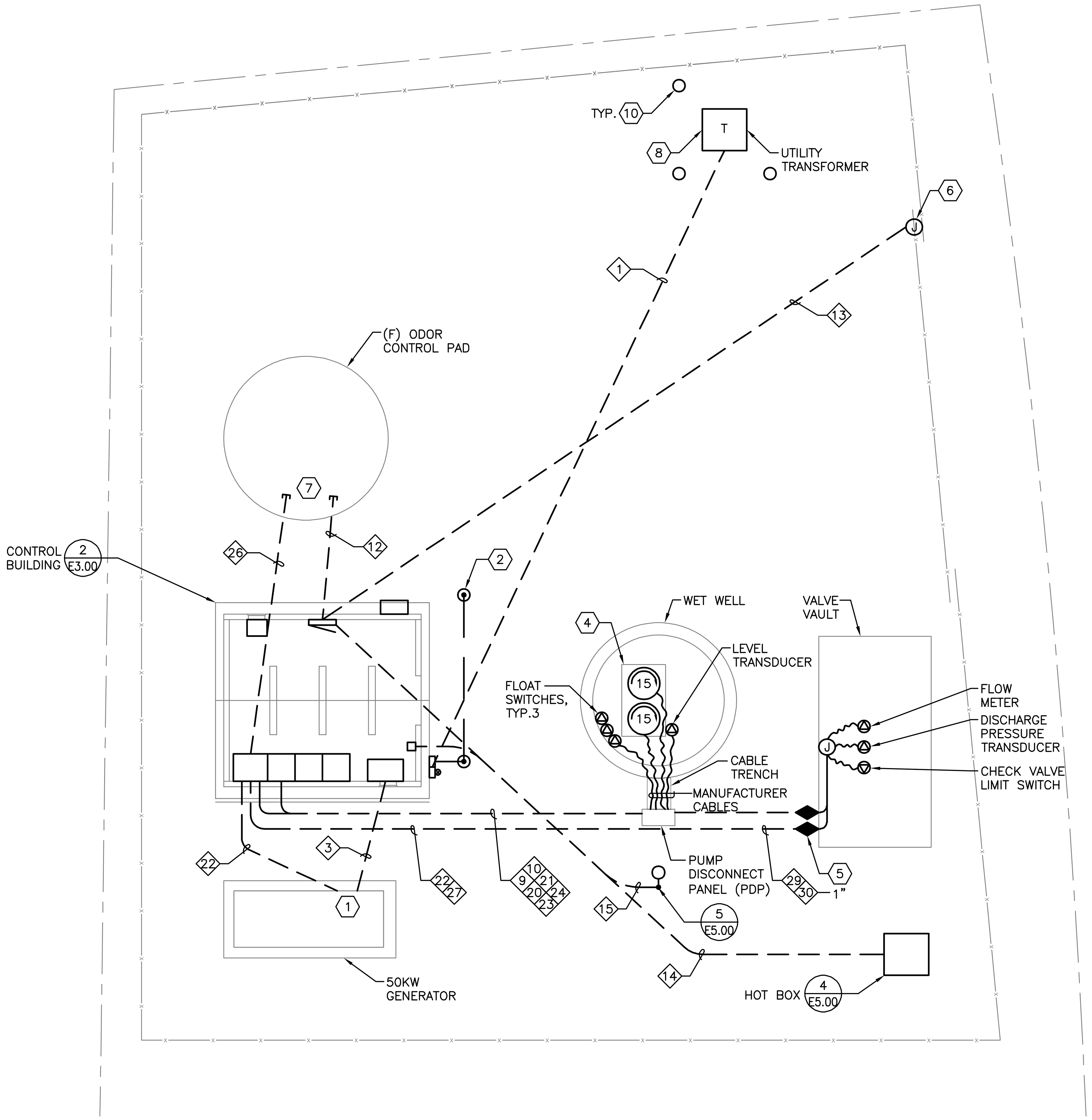

1 / E3.00 ELECTRICAL SITE PLAN
SCALE: 1" = 5'

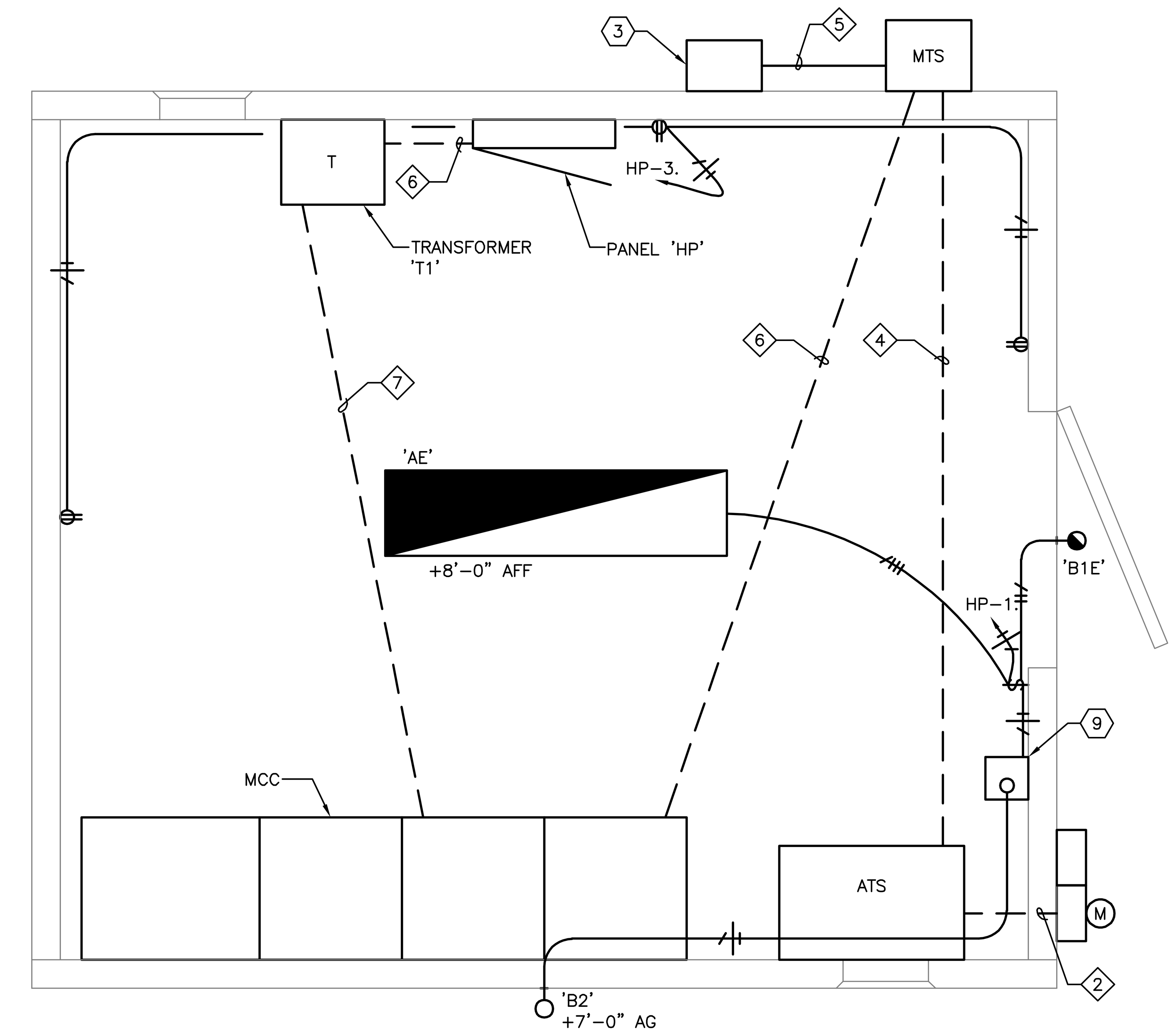

2 / E3.00 ELECTRICAL FLOOR PLAN
SCALE: 3/4" = 1'-0"

R&W ENGINEERING, INC.
9615 S.W. Allen Boulevard
Suite 107
Beaverton, Oregon 97005
Phone: (503) 726-3314
Office: (503) 292-6000
E-mail: rweng@rweng.com
Project No.: 1655.002.001 Contact: MICHAEL FOSTER

CITY LOGO

REGISTERED PROFESSIONAL ENGINEER 18533 OREGON JULY 10, 1996 JEFFREY L. HOWARD
PRELIMINARY
EXPIRES 6/30/23
STAMP

Otak
Otak, Inc.
808 SW Third Avenue, Ste. 800
Portland, OR 97204
503. 287. 6825
www.otak.com

CONSULTANT

S. 1ST AND STRAND STREETS ROAD AND UTILITY EXTENSIONS
ST. HELENS, OREGON
ELECTRICAL SITE PLAN

TITLE

#	DATE	DESCRIPTION

REVISIONS

DATUM
OTAK CAD
DRAWN BY CHECKED BY
30% DESIGN
STATUS
AUGUST 4, 2021
DATE
19823
PROJECT NUMBER

E3.00

© 2021 OTAK, INC.
If this drawing is not 22" x 34", it has been reduced/enlarged. Scale accordingly.

PANEL: 'HP'			BUS: 100 A		DATE: 12/22/21			VOLTAGE: 120 / 240 VOLTS, 1 PHASE, 3 WIRE		
FEEDER: SEE ONE–LINE DIAGRAM		MAIN BRKR: 60 A						MOUNTING:		
CKT NO.	CIRCUIT DESCRIPTION	CKT BKR AMPS/POLE	LOAD TYPE	LOAD VA	PHASE	LOAD VA	LOAD TYPE	CKT BKR AMPS/POLE	CIRCUIT DESCRIPTION	CKT NO.
1	LIGHTING AND POLE RECEPTACLE	20/1	L	494	A			20/1	SPARE	2
3	RECEPTACLES	20/1	R	540	B			20/1	SPARE	4
5	GATE MOTOR	20/1	Z	500	A			20/1	SPARE	6
7	HOT BOX GFCI	20/1	R	180	B			20/1	SPARE	8
9	SPARE	20/1			A			20/1	SPARE	10
11	SPARE	20/1			B			20/1	SPARE	12
13	SPACE				A				SPACE	14
15	SPACE				B				SPACE	16
17	SPACE				A				SPACE	18
19	SPACE				B				SPACE	20
21	SPACE				A				SPACE	22
23	SPACE				B				SPACE	24

	CONNECTED LOAD		.......NOTES...........
LOAD PER PHASE (VA)	A=	994 VA	1.
	B=	720 VA	2.
LOAD PER PHASE (AMPS)	A=	8.3 A	3.
	B=	6.0 A	4.
	TOTAL LOAD (KVA)	1.7 KVA	5.
	TOTAL LOAD AMPS	7.1 A	

LUMINAIRE SCHEDULE

LUMINAIRE TYPE	DESCRIPTION	LAMP TYPE	INPUT WATTS	DRIVER/ BALLAST	COLOR TEMP	MANUFACTURER AND MODEL SERIES
'AE'	54" x 8" LINEAR SUSPENDED ROUGH SERVICE LUMINAIRE. FROSTED POLYCARBONATE LENS, MEDIUM DISTRIBUTION, 15W EMERGENCY BATTERY PACK. CHAIN MOUNTED.	LED 8000 LM	67W	STANDARD MVOLT 0–10V	4000K	LITHONIA LIGHTING: VAP SERIES OR APPROVED EQUAL.
'B1E'	11.5" WIDE WALL PACK, FORWARD THROW MEDIUM DISTRIBUTION, 10W BATTERY BACKUP, INTEGRAL BI–LEVEL MOTION SENSOR WITH PHOTOCELL.	LED 3000 LM	32W	STANDARD MVOLT 0–10V	4000K	LITHONIA LIGHTING: WDGE2 SERIES OR APPROVED EQUAL.
'B2'	18" WIDE WALL PACK, FORWARD THROW MEDIUM DISTRIBUTION.	LED 7500 LM	52W	STANDARD MVOLT 0–10V	4000K	LITHONIA LIGHTING: WDGE3 SERIES OR APPROVED EQUAL.
'C'	33" X 13" POLE MOUNTED AREA LUMINAIRE, P6 FORWARD OPTICS, TYPE IV MEDIUM DISTRIBUTION, SQUARE POLE MOUNTING.	LED 17299 LM	163W	STANDARD MVOLT 0–10V	4000K	LITHONIA LIGHTING: DSX1 SERIES OR APPROVED EQUAL.

NOTES:

1. VERIFY FINISHES WITH ENGINEER AND OWNER PRIOR TO PURCHASE.
2. ALL LUMINAIRES WITH BATTERY BACKUP TO OPERATE FOR A MINIMUM OF 90–MINUTES PER CODE REQUIREMENTS.

CIRCUIT SCHEDULE

ALL CIRCUITS ARE IDENTIFIED ON THE PLANS WITH THE DIAMOND SYMBOL. CONDUCTOR SIZES ARE BASED ON COPPER CONDUCTORS. CONDUIT SIZES ARE SHOWN FOR CASES WHEN CIRCUIT CONDUCTORS ARE RUN WITHOUT OTHER CIRCUITS. MULTIPLE CIRCUITS RUN IN COMMON CONDUITS ARE SHOWN ON PLANS AND SUPERSEDE THE BASIC CONDUIT SIZE SHOWN.

RACEWAY SIZES ARE IN INCHES WITH QUANTITIES IN EXCESS OF (1) SHOWN IN ADJACENT PARENTHESIS. CONDUCTOR CONFIGURATIONS ARE CODED AS FOLLOWS: P– FOR POWER CONDUCTORS, G – FOR GROUND CONDUCTORS, N – FOR NEUTRAL CONDUCTORS, C – FOR CONTROL CONDUCTORS, TSP – FOR TWISTED SHIELDED PAIR, AND SP – FOR SPARE CONDUCTORS.

CIRCUIT NUMBER	FROM	TO	CONDUCTORS	RACEWAY	NOTES
1	UTILITY TRANSFORMER	METER MAIN	(3) 3/0 AWG, P (1) 3/0 AWG, N	3	VERIFY ALL REQUIREMENTS WITH UTILITY PRIOR TO INSTALL.
2	METER MAIN	AUTOMATIC TRANSFER SWITCH	(3) 2 AWG, P (1) 2 AWG, N (1) 8 AWG, G	1.5	
3	GENERATOR	AUTOMATIC TRANSFER SWITCH	(3) 2 AWG, P (1) 2 AWG, N (1) 8 AWG, G	1.5	
4	AUTOMATIC TRANSFER SWITCH	MANUAL TRANSFER SWITCH	(3) 2 AWG, P (1) 2 AWG, N (1) 8 AWG, G	1.5	
5	GENERATOR RECEPTACLE	MANUAL TRANSFER SWITCH	(3) 2 AWG, P (1) 2 AWG, N (1) 8 AWG, G	1.5	
6	MANUAL TRANSFER SWITCH	MCC	(3) 2 AWG, P (1) 2 AWG, N (1) 8 AWG, G	1.5	
7	MCC	TRANSFORMER	(3) 10 AWG, P (1) 10 AWG, G	1	VERIFY FINAL SIZE OF XFMR PRIOR TO INSTALLATION.
8	TRANSFORMER	PANEL 'HP'	(3) 4 AWG, P (1) 4 AWG, N (1) 10 AWG, G	1.5	VERIFY FINAL SIZE OF PANEL PRIOR TO INSTALLATION.
9	MCC	PUMP DISCONNECT PANEL	(3) 10 AWG, P (1) 10 AWG, G	1	PUMP 1
10	MCC	PUMP DISCONNECT PANEL	(3) 10 AWG, P (1) 10 AWG, G	1	PUMP 2
11	MCC	PUMP DISCONNECT PANEL	---	1	SPARE
12	PANEL 'HP'	ODOR CONTROL PAD (FUTURE)	---	1	FUTURE ODOR CONTROL PAD POWER.
13	PANEL 'HP'	GATE MOTOR	(1) #12 AWG, P (1) #12 AWG, N (1) #12 AWG, G	1	VERIFY ELECTRICAL REQUIREMENTS, ALERT ENGINEER OF DISCREPANCIES.
14	PANEL 'HP'	HOT BOX GFCI	(1) #12 AWG, P (1) #12 AWG, N (1) #12 AWG, G	1	
15	EXTERIOR LIGHTING SWITCH	EXTERIOR POLE LIGHT	(2) #12 AWG, P (1) #12 AWG, N (1) #12 AWG, G	1	PROVIDE UNSWITCH CIRCUIT TO RECEPTACLE ON POLE LIGHT.
16	NOT USED				
17	NOT USED				
18	NOT USED				
19	NOT USED				
20	MCC CONTROL PANEL	PUMP DISCONNECT PANEL	(6) #14 AWG, C (1) #12 AWG, G	1	FLOAT SWITCHES (OVERFLOW, HIGH, LOW)
21	MCC CONTROL PANEL	PUMP DISCONNECT PANEL	MFR CABLES (1) #12 AWG, G	(2) 1.5	LEVEL TRANSDUCER, VERIFY CONDUIT SIZE REQUIRED WITH MFR RECOMMENDATIONS.
22	MCC CONTROL PANEL	VALVE VAULT FLOW METER	MFR CABLES (1) #12 AWG, G	1.25	FLOW METER, VERIFY CONDUIT SIZE REQUIRED WITH MFR RECOMMENDATIONS.
23	MCC CONTROL PANEL	PUMP DISCONNECT PANEL	(1) #16 TSP, C (1) #12 AWG, G	1	PRESSURE XDCR
24	MCC CONTROL PANEL	PUMP DISCONNECT PANEL	(4) #14 AWG, C (1) #12 AWG, G	1	VALVE VAULT LIMIT SWITCHES
25	MCC CONTROL PANEL	GENERATOR	(8) #14 AWG, C (1) #12 AWG, G	1	GENERATOR CONTROLS
26	MCC CONTROL PANEL	ODOR CONTROL PAD (FUTURE)	---	2	FUTURE ODOR CONTROL PAD CONTROLS.
27	MCC CONTROL PANEL	VALVE VAULT	---	(2) 1.5	SPARE
28	MCC CONTROL PANEL	PUMP PANEL	---	(2) 1.5	SPARE
29	PUMP DISCONNECT PANEL	VALVE VAULT DISCHARGE PRESS. XDCR	(1) #16 TSP, C (1) #12 AWG, G	1	PRESSURE XDCR INTRINSICALLY SAFE CIRCUIT.
30	PUMP DISCONNECT PANEL	VALVE VAULT, CHECK VALVE LIMIT SWITCH	(4) #14 AWG, C (1) #12 AWG, G	1	VALVE VAULT LIMIT SWITCHES INTRINSICALLY SAFE CIRCUIT.

R&W ENGINEERING, INC.
9615 S.W. Allen Boulevard
Suite 107
Beaverton, Oregon 97005
Phone: (503) 726-3314
Office: (503) 292-6000
E-mail: rweng@rweng.com
Project No.: 1655.002.001 Contact: MICHAEL FOSTER

CITY LOGO

REGISTERED PROFESSIONAL ENGINEER
18533
PRELIMINARY
OREGON
JULY 10, 1996
JEFFREY L. HOWARD
EXPIRES 6/30/23

STAMP

Otak
Otak, Inc.
808 SW Third Avenue, Ste. 800
Portland, OR 97204
503. 287. 6825
www.otak.com

CONSULTANT

S. 1ST AND STRAND STREETS ROAD AND UTILITY EXTENSIONS

ST. HELENS, OREGON

ELECTRICAL SCHEDULES

TITLE

#	DATE	DESCRIPTION

REVISIONS

DATUM

OTAK CAD
DRAWN BY CHECKED BY

30% DESIGN
STATUS

AUGUST 4, 2021
DATE

19823
PROJECT NUMBER

E4.00

© 2021 OTAK, INC.

If this drawing is not 22" x 34", it has been reduced/enlarged. Scale accordingly.

Plotted: Dec 22, 2021 – 11:38am W:\WF1K\1655_Grayling_Engineers\002_St_Helens_WW_PS\001_Dsn\DWG\E4.00.dwg Layout Name: Layout1

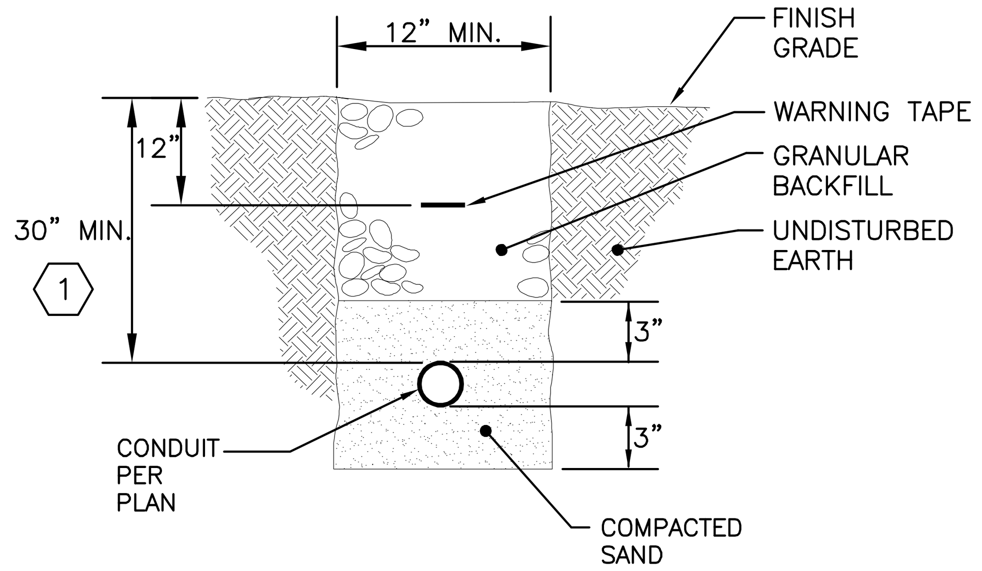

1 E5.00 TYPICAL CONDUIT TRENCH
NOT TO SCALE

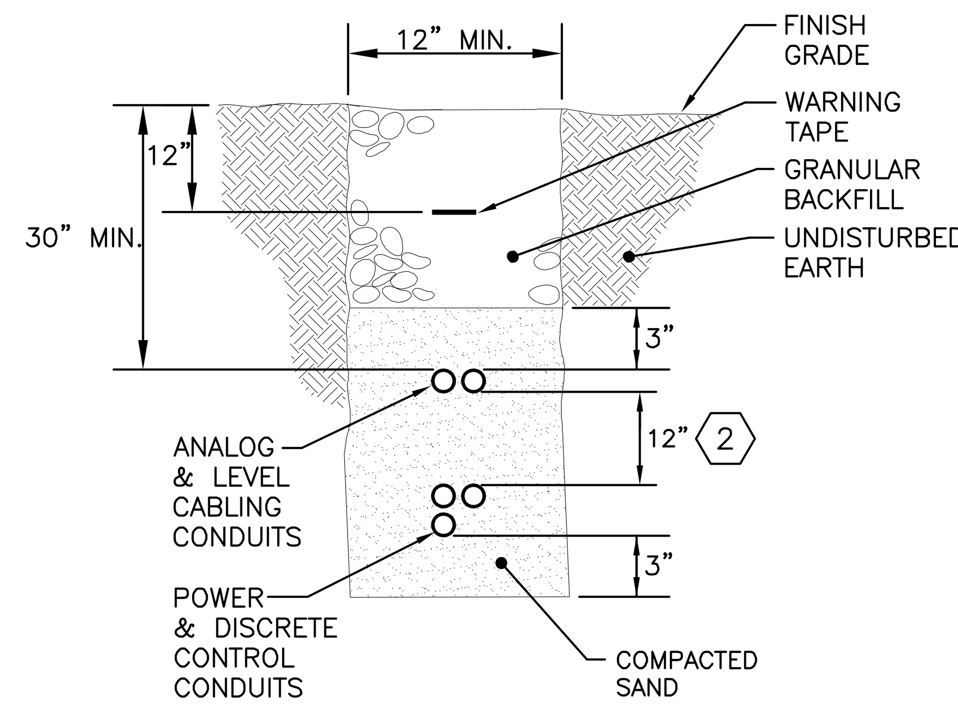

2 E5.00 MIXED CONDUIT TRENCH
NOT TO SCALE

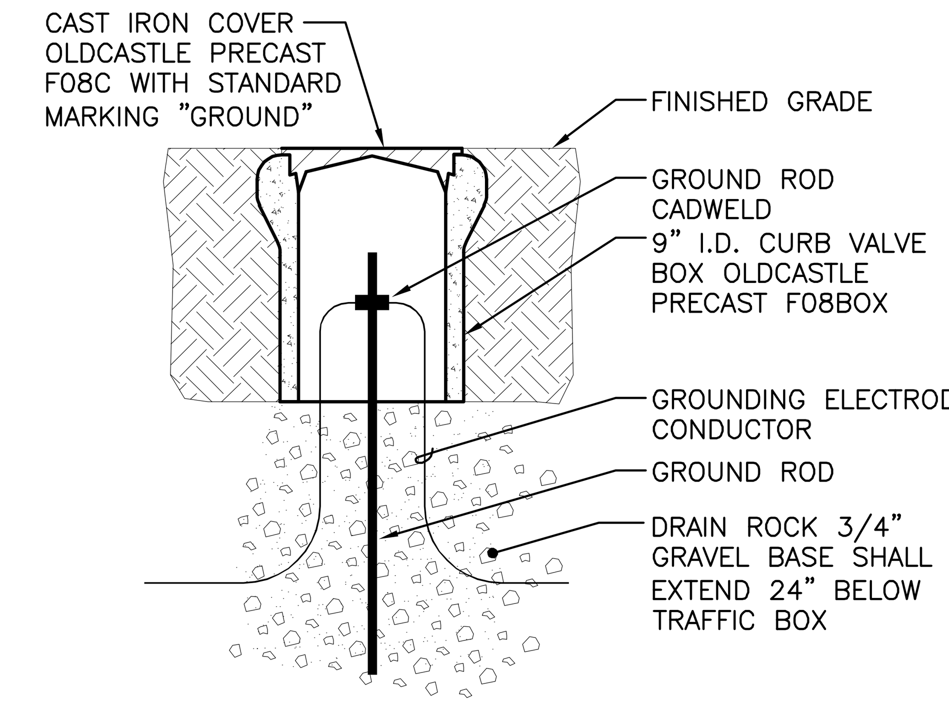

3 E5.00 GROUND ROD TEST DETAIL
NOT TO SCALE

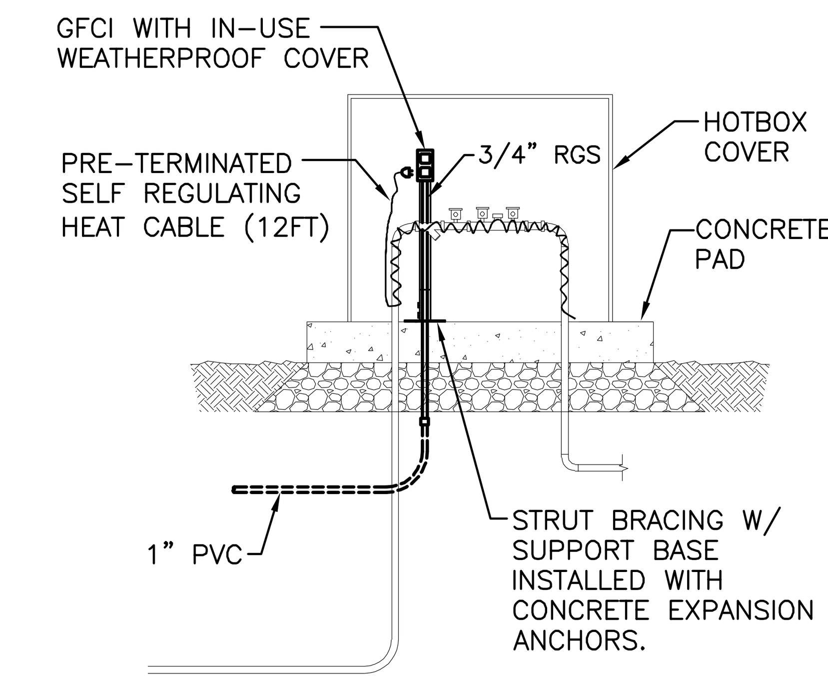

4 E5.00 HOTBOX GFCI DETAIL
NOT TO SCALE

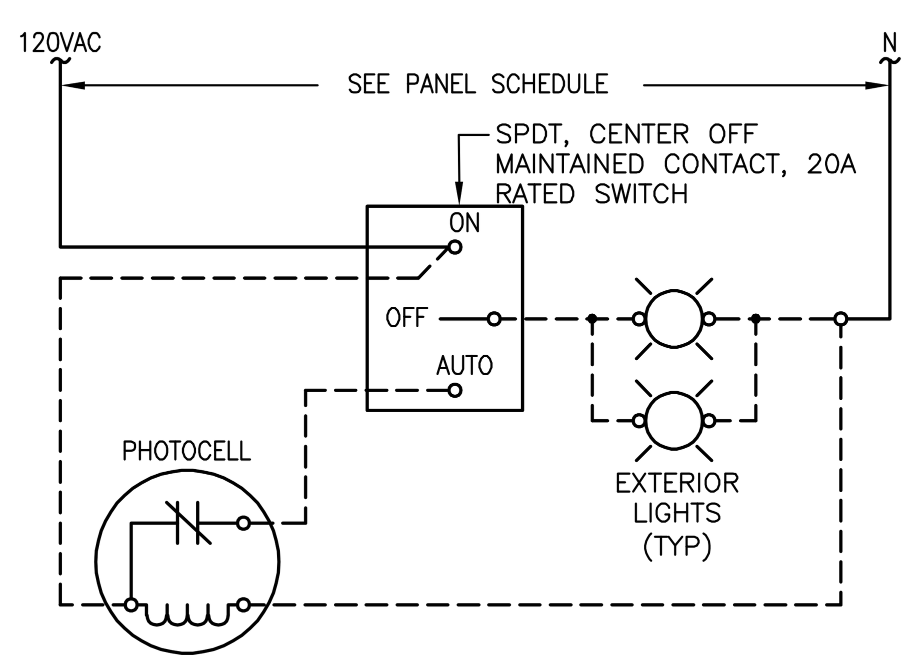

5 E5.00 LIGHTING SWITCH CONTROL DETAIL
NOT TO SCALE

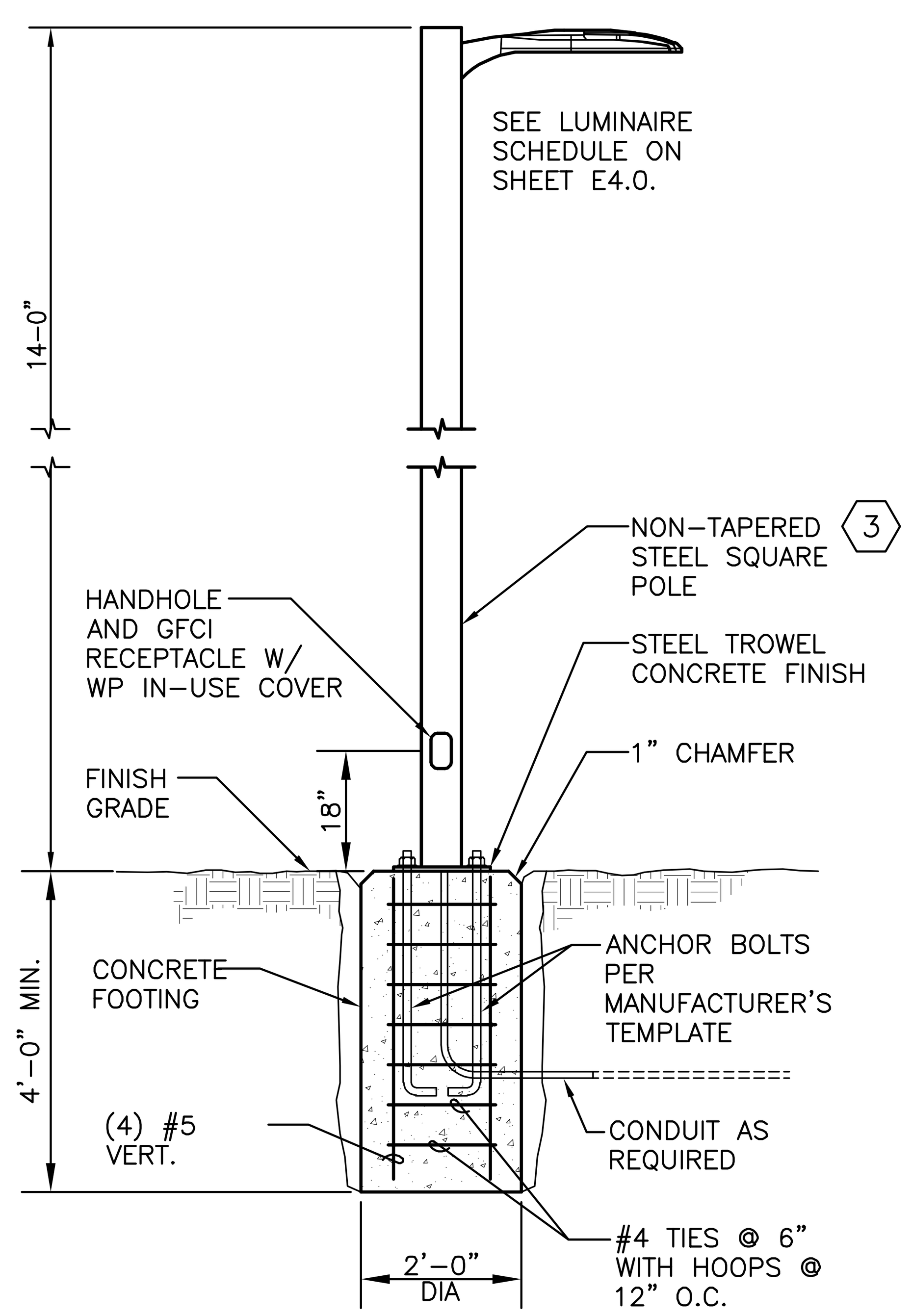

6 E5.00 AREA LIGHT DETAIL
NOT TO SCALE

NOTES THIS SHEET

1. VERIFY TRENCH DEPTH AND COVERING FOR INCOMING SERVICE CONDUIT WITH LOCAL UTILITY AND CIVIL DISCIPLINE FOR INTERSECTING PIPES.
2. 12" SEPARATION MAY BE HORIZONTAL WITH SAME 30" TRENCH DEPTH FOR MIXED CONDUITS.
3. 6" STEEL POLE WITH 4'-0" ARM. POLE AND ARM FINISH SHALL BE DARK BRONZE AND MATCH LUMINAIRE. POLE SHALL BE WELDABLE-GRADE, HOT-ROLLED CARBON STEEL TUBING WITH MINIMUM YIELD OF 55,000 PSI. PROVIDE MANUAL RECEPTACLE WITH DIE CAST METAL WEATHERPROOF IN-USE COVER MOUNTED ON POLE AT 18" AFG.

R&W ENGINEERING, INC.
9615 S.W. Allen Boulevard
Suite 107
Beaverton, Oregon 97005
Phone: (503) 726-3314
Office: (503) 292-6000
E-mail: rweng@rweng.com
Project No.: 1655.002.001 Contact: MICHAEL FOSTER

CITY LOGO

REGISTERED PROFESSIONAL ENGINEER 18533 OREGON JULY 10, 1996 JEFFREY L. HOWARD
PRELIMINARY
EXPIRES 6/30/23

STAMP

Otak
Otak, Inc.
808 SW Third Avenue, Ste. 800
Portland, OR 97204
503. 287. 6825
www.otak.com

CONSULTANT

S. 1ST AND STRAND STREETS ROAD AND UTILITY EXTENSIONS
ST. HELENS, OREGON
ELECTRICAL DETAILS

TITLE

#	DATE	DESCRIPTION

REVISIONS

DATUM

OTAK CAD
DRAWN BY CHECKED BY

30% DESIGN
STATUS

AUGUST 4, 2021
DATE

19823
PROJECT NUMBER

E5.00

© 2021 OTAK, INC.
If this drawing is not 22" x 34", it has been reduced/enlarged. Scale accordingly.

Plotted: Dec 22, 2021 – 1:47pm amiscick W:\WE1K\1655 Grayling Engineers\002_St. Helens_WW_PS\001_Dsn\DWG\E5.00.dwg Layout Name: Layout1

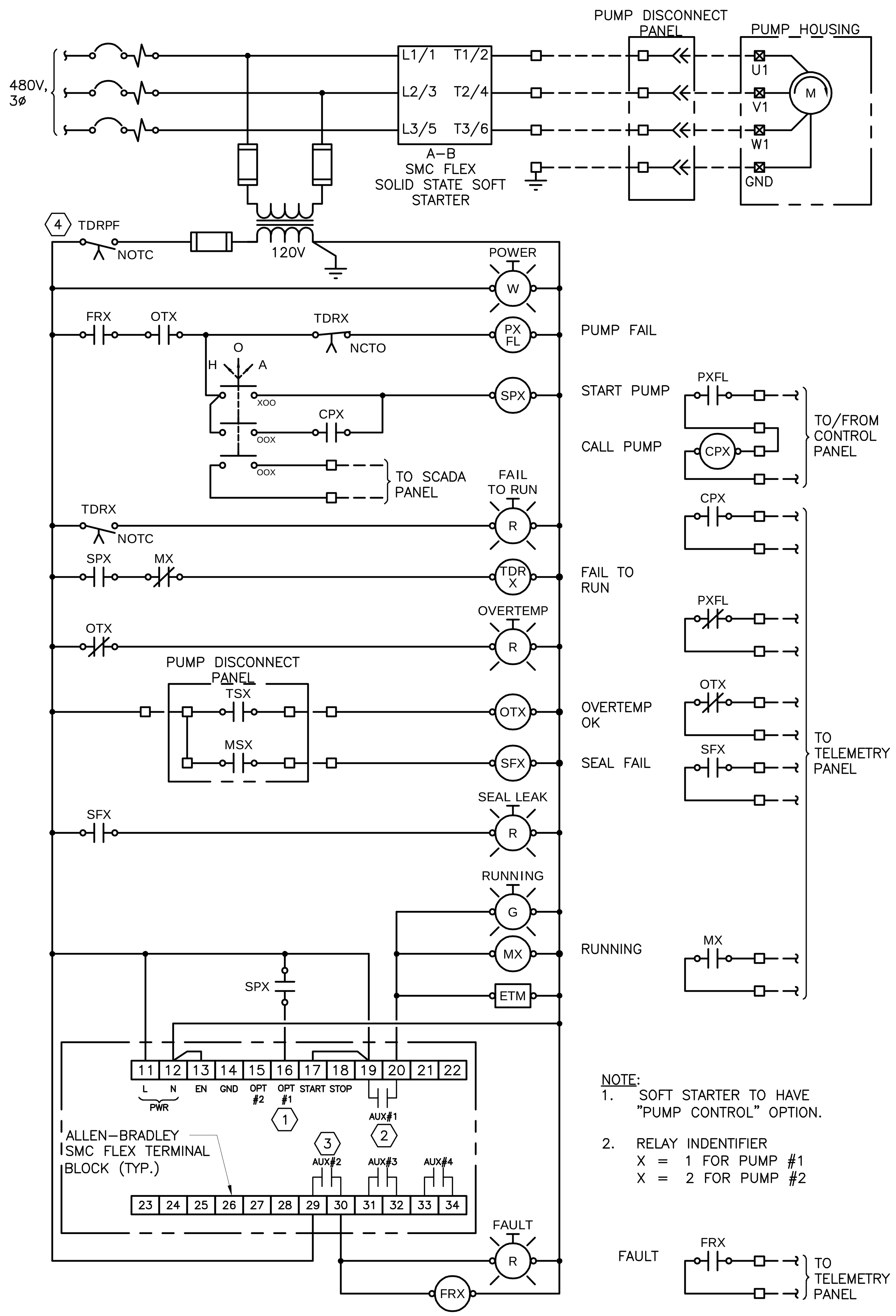

NOTE:
1. SOFT STARTER TO HAVE "PUMP CONTROL" OPTION.
2. RELAY INDENTIFIER
X = 1 FOR PUMP #1
X = 2 FOR PUMP #2

SOFT STARTER DIAGRAM

NOT TO SCALE

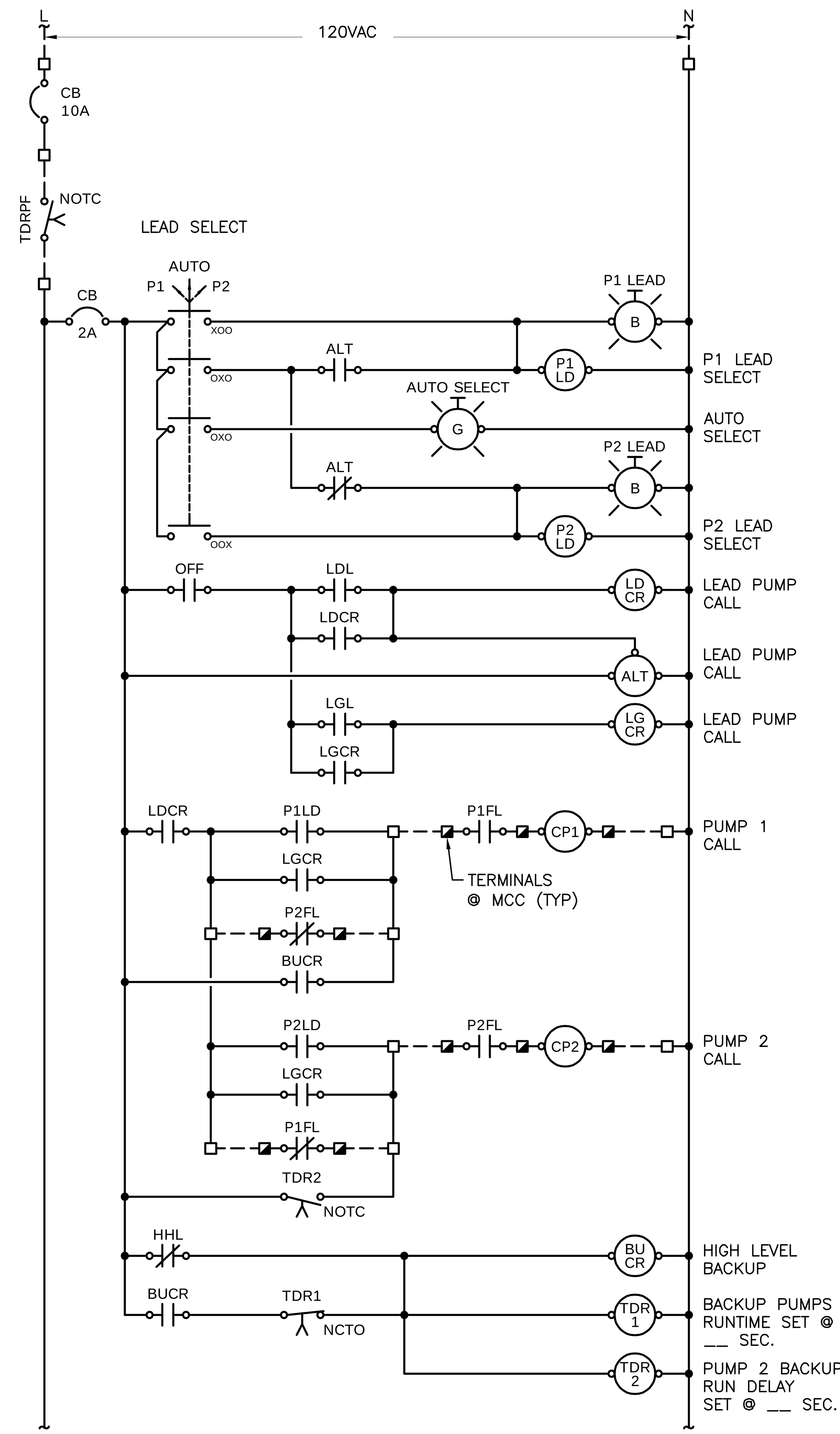

PUMP CONTROL DIAGRAM

NOT TO SCALE

NOTES THIS SHEET

1. OPTION INPUT #1 PROGRAMMED FOR "STOP OPTION" (PUMP CONTROL STOP).
2. AUX #1 PROGRAMMED FOR "UP TO SPEED (NO)".
3. AUX #2 PROGRAMMED FOR "FAULT (NC)" (CONTACTS TO OPEN ON FAULT CONDITION OR LOSS OF POWER).
4. POWER FAIL TIME DELAY LOCATED IN SEPARATE MCC SECTION. SEE ONE–LINE DIAGRAM.

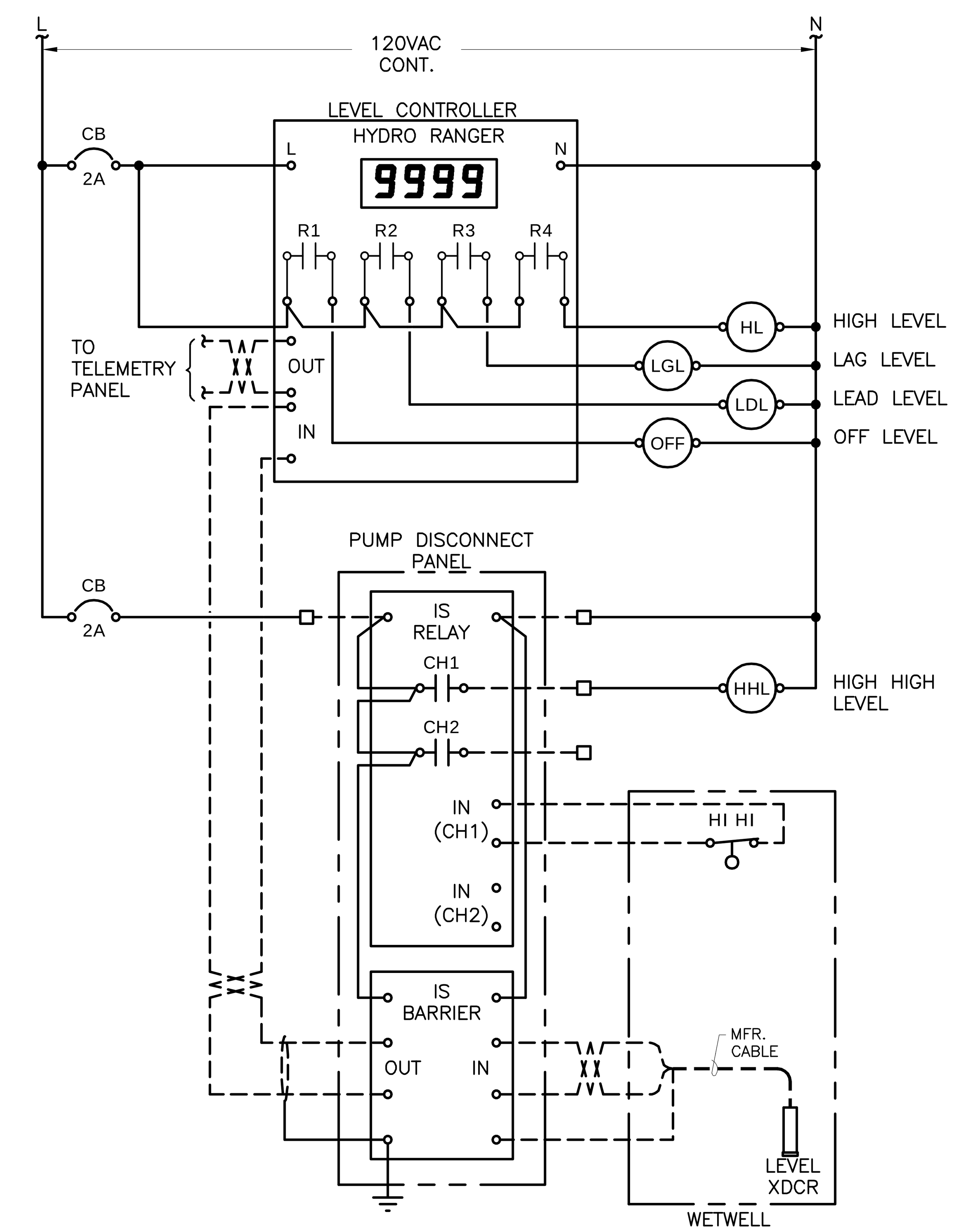

CITY LOGO

PRELIMINARY

REGISTERED PROFESSIONAL ENGINEER 18533 OREGON JULY 10, 1996 JEFFREY L. HOWARD

EXPIRES 6/30/23

STAMP

Otak
Otak, Inc.
808 SW Third Avenue, Ste. 800
Portland, OR 97204
503. 287. 6825
www.otak.com

CONSULTANT

S. 1ST AND STRAND STREETS ROAD AND UTILITY EXTENSIONS

ST. HELENS, OREGON

ELECTRICAL WIRING DIAGRAMS

TITLE

#	DATE	DESCRIPTION

REVISIONS

DATUM

OTAK CAD

DRAWN BY | CHECKED BY

30% DESIGN

STATUS

AUGUST 4, 2021

DATE

19823

PROJECT NUMBER

E6.00

© 2021 OTAK, INC.

If this drawing is not 22" x 34", it has been reduced/enlarged. Scale accordingly.

R&W ENGINEERING, INC.
9615 S.W. Allen Boulevard
Suite 107
Beaverton, Oregon 97005
Phone: (503) 726-3314
Office: (503) 292-6000
E-mail: rweng@rweng.com
Project No.: 1655.002.001 Contact: MICHAEL FOSTER

Plotted: Dec 22, 2021 – 1:57pm amigpick W:\WF1K\1655_Grayling_Engineers\002_St_Helens_WW_PS\001_Dsgn\DWG\E6.00.dwg Layout Name: Layout1

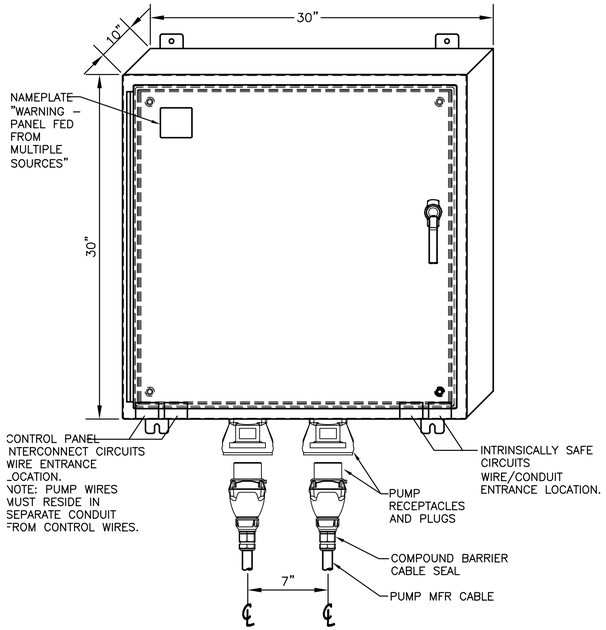

FRONT VIEW

NTS

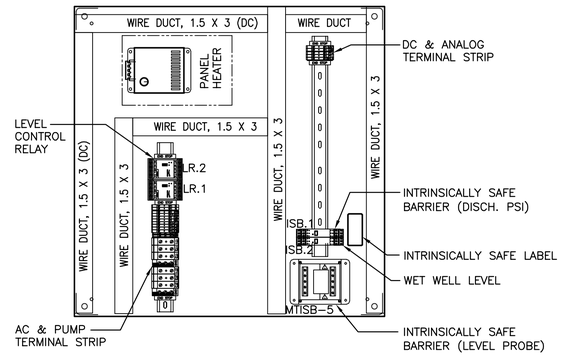

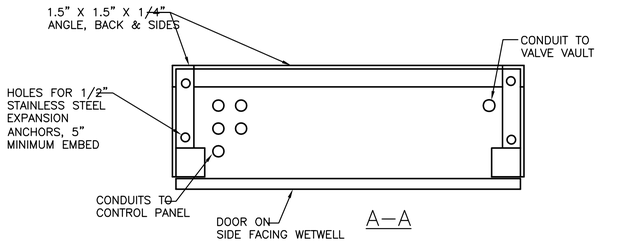

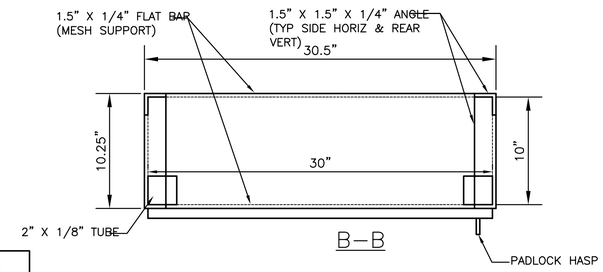

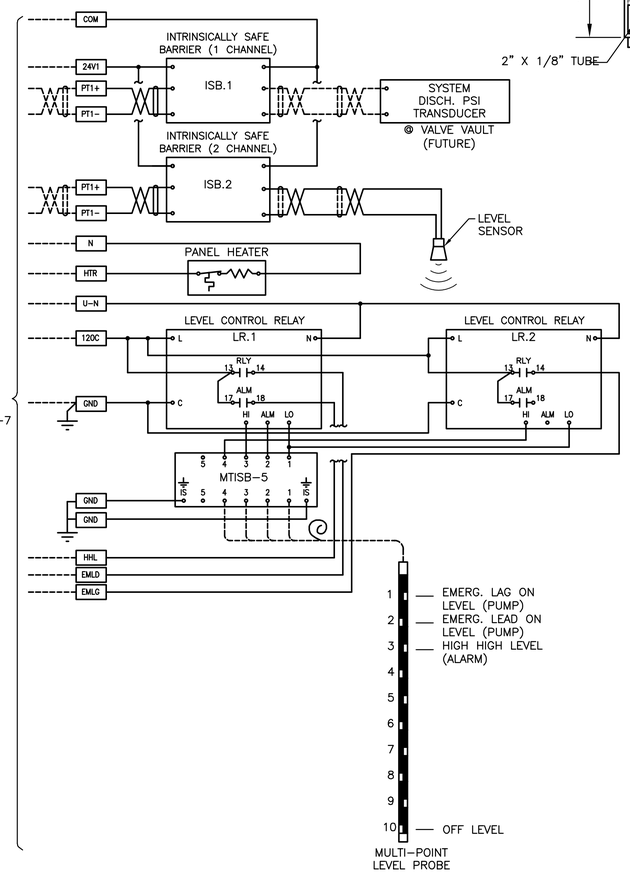

NOTE: ALL CONDUITS MUST BE CONTINUOUS RGS FROM BELOW GRADE TO CONTROL PANEL. EXCEPTION NO 1. REFERENCE NEC ARTICLE 501.15 (B2)

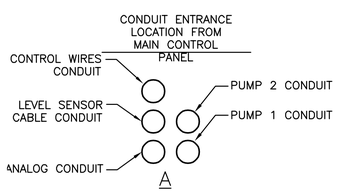

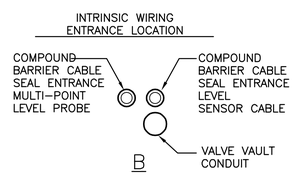

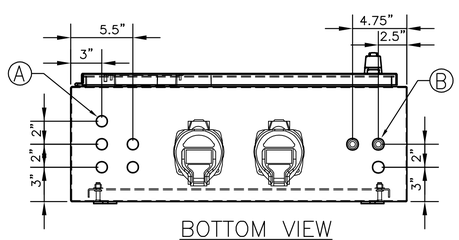

BOTTOM VIEW

NTS

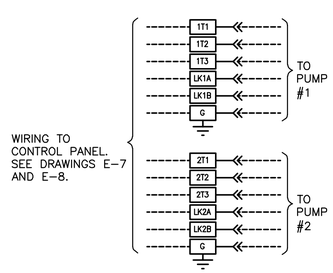

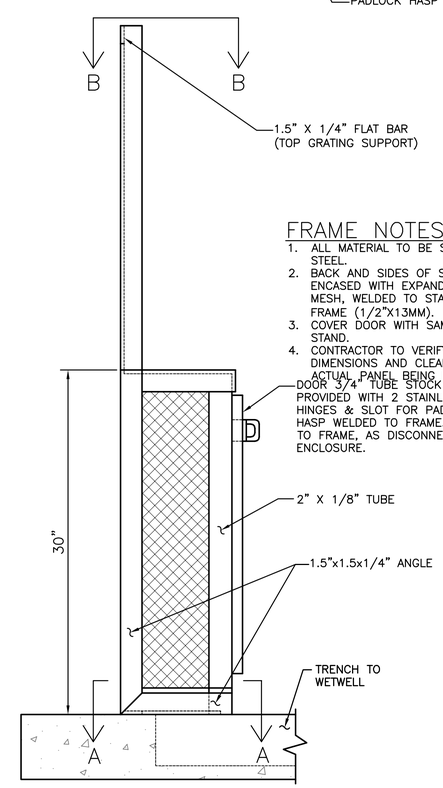

FRAME NOTES:

1. ALL MATERIAL TO BE STAINLESS STEEL.
2. BACK AND SIDES OF STAND TO BE ENCASED WITH EXPANDED METAL MESH, WELDED TO STAND AND FRAME (1/2"X13MM).
3. COVER DOOR WITH SAME MESH AS STAND.
4. CONTRACTOR TO VERIFY ALL DIMENSIONS AND CLEARANCES WITH ACTUAL PANEL BEING PROVIDED.

R&W ENGINEERING, INC.
9615 S.W. Allen Boulevard
Suite 107
Beaverton, Oregon 97005
Phone: (503) 726-3314
Office: (503) 292-6000
E-mail: rweng@rweng.com
Project No.: 1655.002.001 Contact: MICHAEL FOSTER

CITY LOGO

REGISTERED PROFESSIONAL ENGINEER 18533 OREGON JULY 10, 1996 JEFFREY L. HOWARD

PRELIMINARY

EXPIRES 6/30/23

STAMP

Otak

Otak, Inc.
808 SW Third Avenue, Ste. 800
Portland, OR 97204
503. 287. 6825
www.otak.com

CONSULTANT

S. 1ST AND STRAND STREETS ROAD AND UTILITY EXTENSIONS

ST. HELENS, OREGON

DISCONNECT PANEL WIRING & LAYOUT

TITLE

#	DATE	DESCRIPTION

REVISIONS

DATUM

OTAK CAD

DRAWN BY CHECKED BY

30% DESIGN

STATUS

AUGUST 4, 2021

DATE

19823

PROJECT NUMBER

E7.00

© 2021 OTAK, INC.

If this drawing is not 22" x 34", it has been reduced/enlarged. Scale accordingly.

Plotted: Dec 22, 2021 – 11:27am gmiranick W:\WE1A\1655_Grayling_Engineers\002_St. Helens WW PS\001_Dsn\DWG\E7.00.dwg Layout Name: Layout1

PROJECT DESCRIPTION

THE PROJECT INCLUDES THE CONSTRUCTION OF A NEW LIFT STATION PUMP HOUSE EQUIPMENT BUILDING.

THE 126 SF BUILDING IS CONSTRUCTED FROM PREFABRICATED CONCRETE WALLS AND ROOF WITH WELDED EMBED CONNECTIONS ON A STRUCTURALLY DESIGNED CONCRETE FOUNDATION AND SLAB ON GRADE.

BUILDING TYPE U
OCCUPANCY / USE – UTILITY

THE PROJECT CONFORMS TO ABAAS ENTRY CLEARANCES, CIRCULATION AND EQUIPMENT CLEARANCES.

SYMBOLS

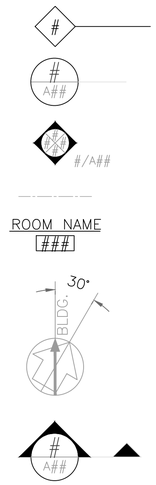

GENERAL NOTES

1. ALL DIMENSIONS ARE TO THE FACE OF STUD, CENTERLINE OF COLUMNS, FACE OF CMU, CONCRETE WALLS, OR CENTERLINE OF OPENINGS, UNLESS OTHERWISE NOTED.
2. CONTRACTOR SHALL PROVIDE BLOCKING AS REQUIRED FOR THE PROPER ANCHORAGE OF ALL WALL ATTACHED ITEMS, SUCH AS DOOR STOPS, ETC.
3. CONTRACTOR SHALL BE RESPONSIBLE FOR CHECKING WORK AND WORKING CONDITIONS AND SHALL VERIFY EXISTING CONDITIONS AT THE JOB SITE BEFORE SUBMITTING PROPOSALS. NO CLAIMS FOR EXTRA COMPENSATION FOR WORK THAT COULD HAVE BEEN FORESEEN BY SUCH INSPECTION WHETHER SHOWN ON CONTRACT DOCUMENTS OR NOT, SHALL BE ACCEPTED OR PAID.
4. VERIFY SIZE, LOCATION AND CHARACTERISTICS OF ALL WORK AND EQUIPMENT TO BE FURNISHED BEFORE ANY CONSTRUCTION BEGINS.
5. CONTRACTOR SHALL VERIFY AND COORDINATE THE SIZE AND LOCATION OF ALL OPENINGS FOR MECHANICAL, ELECTRICAL, AND PLUMBING WORK AND EQUIPMENT WITH EACH TRADE.
6. VERIFY THAT REQUIRED OPERATION AND MAINTENANCE CLEARANCES ARE PROVIDED FOR ALL EQUIPMENT ITEMS. INSTALL ALL ITEMS IN ACCORDANCE WITH THE MANUFACTURER'S WRITTEN INSTRUCTIONS. NOTIFY THE GOVERNMENT IN WRITING OF ANY CONFLICTS.
7. CONTRACTOR SHALL COORDINATE AND SCHEDULE ALL REQUIRED UTILITY SHUT–DOWN WITH THE PARK. NOTIFY PARK OF INTENDED SHUTDOWN AT LEAST 48 HOURS PRIOR TO SCHEDULED SHUTDOWN.
8. ALL PENETRATIONS WILL BE DESIGNED TO PREVENT RODENT INTRUSION.

BUILDING CODE SUMMARY

PROJECT ADDRESS:	1ST & STRAND LIFT STATION
	ST HELENS, OR
BUILDING CODE:	2019 OREGON STRUCTURAL SPECIALTY CODE
	2019 OREGON MECHANICAL SPECIALTY CODE
	2021 OREGON PLUMBING SPECIALTY CODE
	2017 OREGON ELECTRICAL SPECIALTY CODE
	2015 ARCHITECTURAL BARRIERS ACT (ABAAS)
	2021 OREGON ENERGY EFFICIENCY SPECIALTY CODE (OEESC)

ENERGY EFFICIENCY ASHRAE 90.1–2019

TABLE 5.5–4 (CLIMATE ZONE 4C)

BUILDING ELEMENT	REQUIRED	PROPOSED
ROOF	R–30	R–30
WALLS (CONCRETE – 4" MIN.)	R–13	R–13
SLABS (HEATED)	R–10 (24" MIN.)	R–10 (24" MIN.)
OPAQUE DOORS (SWINGING)	U–0.370	U–0.370
FENESTRATION	NA	NA

ABBREVIATIONS

&	AND
@	AT
#	NUMBER
(E)	EXISTING
(N)	NEW
ABAAS	ARCHITECTURAL BARRIERS ACT
ADDL	ADDITIONAL
AFF	ABOVE FINISH FLOOR
AHJ	AUTHORITY HAVING JURISDICTION
BD	BOARD
BLDG	BUILDING
BLKG	BLOCKING
BO	BOTTOM OF
℄	CENTERLINE
CLG	CEILING
CLO	CLOSET
CLR	CLEAR(ANCE)
CMU	CONCRETE MASONRY UNIT(S)
C.A.	CONTRACTING OFFICER
CONC	CONCRETE
CONT	CONTINUOUS
CONSTR	CONSTRUCTION
DIA	DIAMETER
DIM	DIMENSION
DR	DOOR
EA	EACH
EL	ELEVATION
ELEC	ELECTRIC(AL)
ELEV	ELEVATION(S)
ELVS	ELEVATION(S)
EQ	EQUAL
EQUIP	EQUIPMENT
EXIST	EXISTING
EXT	EXTERIOR
FD	FLOOR DRAIN
FE	FIRE EXTINGUISHER
FIN	FINISH(ED)
FLR	FLOOR
FO	FACE OF
FOS	FACE OF STUD, SLAB
FRP	FIBERGLASS REINFORCED PANEL
GA	GAUGE, GYPSUM ASSOCIATION
GALV	GALVANIZED GALVANIZE
GYP	GYPSUM
HM	HOLLOW METAL
HR	HOUR
HVAC	HEATING VENTILATION AND AIR CONDITIONING
IBC	INTERNATIONAL BUILDING CODE
INFO	INFORMATION
INT	INTERIOR
MAX	MAXIMUM
MECH	MECHANICAL
MFR	MANUFACTURE(R)
MIN	MINIMUM
MTL	METAL
NA	NOT APPLICABLE
NIC	NOT IN CONTRACT
NO	NUMBER
OC	ON CENTER
OPP	OPPOSITE
PERF	PERFORATE(D)
PL	PLATE, PROPERTY LINE
PLYWD	PLYWOOD
PREFIN	PREFINISH(ED)
PROP	PROPOSED
PT	PRESSURE TREATED
PNT	PAINT
REQD	REQUIRED
REV	REVERSE(D)
RO	ROUGH OPENING
SIM	SIMILAR
SPEC	SPECIFICATION(S)
STD	STANDARD
STC	SOUND TRANSMISSION CLASS
STOR	STORAGE
STRUCT	STRUCTURAL
T	TEMPERED, TREAD
THK	THICK
TO	TOP OF
TYP	TYPICAL
UNO	UNLESS NOTED OTHERWISE
VCT	VINYL COMPOSITION TILE
VIF	VERIFY IN FIELD
W/	WITH
WD	WOOD
WIN	WINDOW
WP	WATER PROOF
WR	WATER RESISTANT
WRB	WEATHER RESISTANT BARRIER

DESIGNED: OTAK	SUB SHEET NO.	TITLE OF SHEET	DRAWING NO.
CADD CJ	A1	ABBREVIATIONS SYMBOLS AND GENERAL NOTES	90% CD
TECH. REVIEW: DS		ST. HELENS LIFT STATION–ELEC. CTRL. BLDG.	PMIS/PKG NO. 19823
DATE: 01/07/22			SHEET 1 OF 3

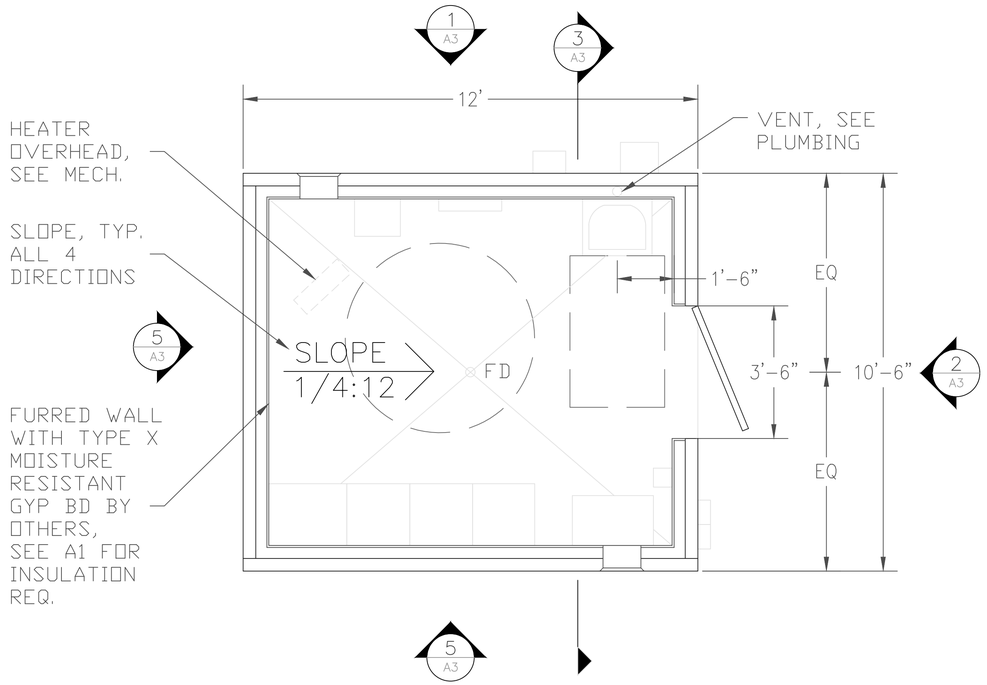

1 A2 FLOOR PLAN

SCALE: 1/2" = 1'-0"

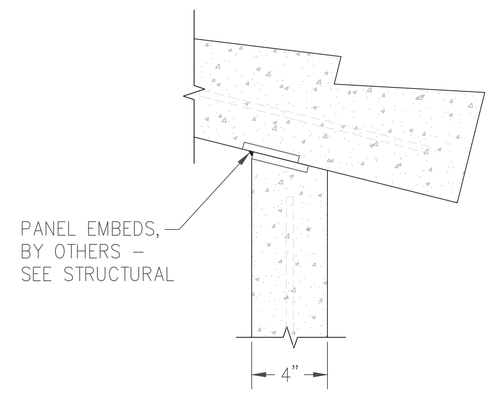

2 A2 WALL TO ROOF CONNECTION

SCALE: NTS

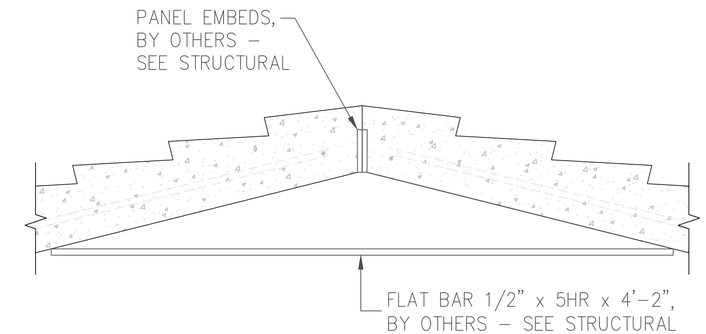

3 A2 RIDGE CONNECTION

SCALE: NTS

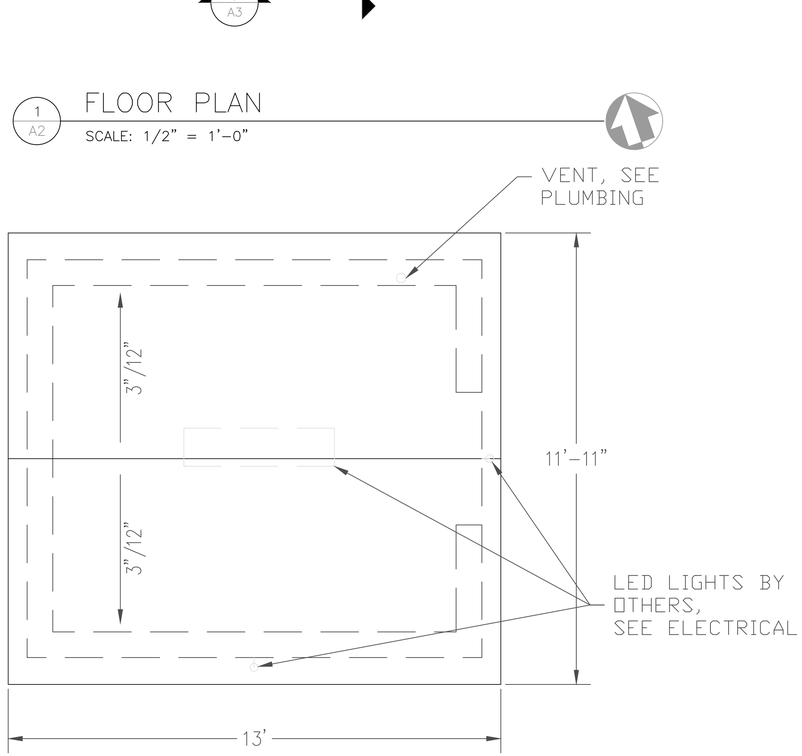

4 A2 ROOF PLAN

SCALE: 1/2" = 1'-0"

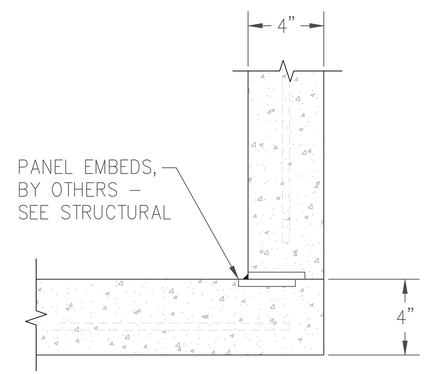

5 A2 WALL TO WALL CONNECTION

SCALE: NTS

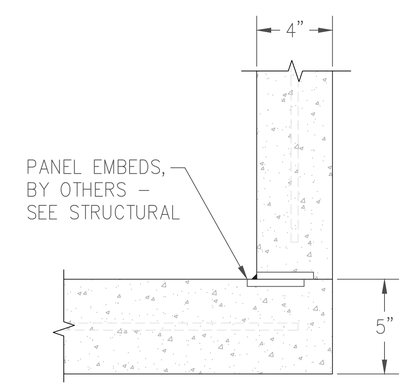

6 A2 WALL TO FLOOR CONNECTION

SCALE: NTS

DESIGNED: OTAK	SUB SHEET NO.	TITLE OF SHEET	DRAWING NO.
CADD CJ	A2	FLOOR & ROOF PLANS, CONNECTION DETAILS	90% CD
TECH. REVIEW: DS			PMIS/PKG NO. 19823
DATE: 01/07/22		ST. HELENS LIFT STATION–ELEC. CTRL. BLDG.	SHEET 2 OF 3

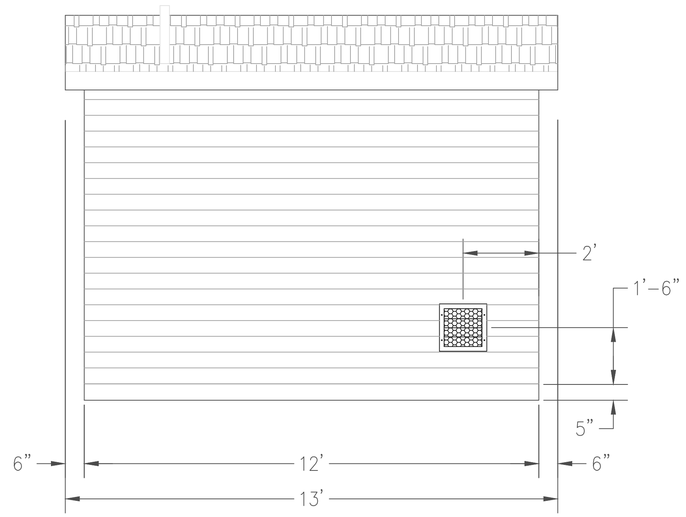

1 A3 NORTH ELEVATION

SCALE: 1/2" = 1'-0"

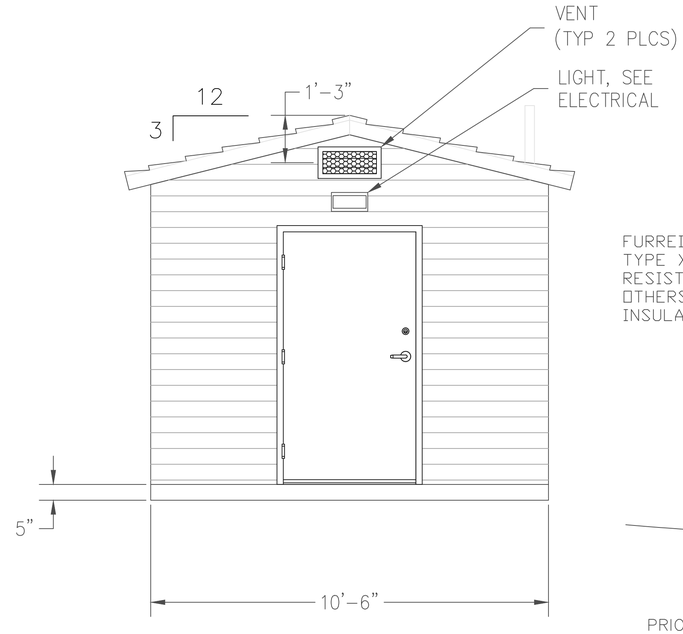

2 A3 EAST ELEVATION

SCALE: 1/2" = 1'-0"

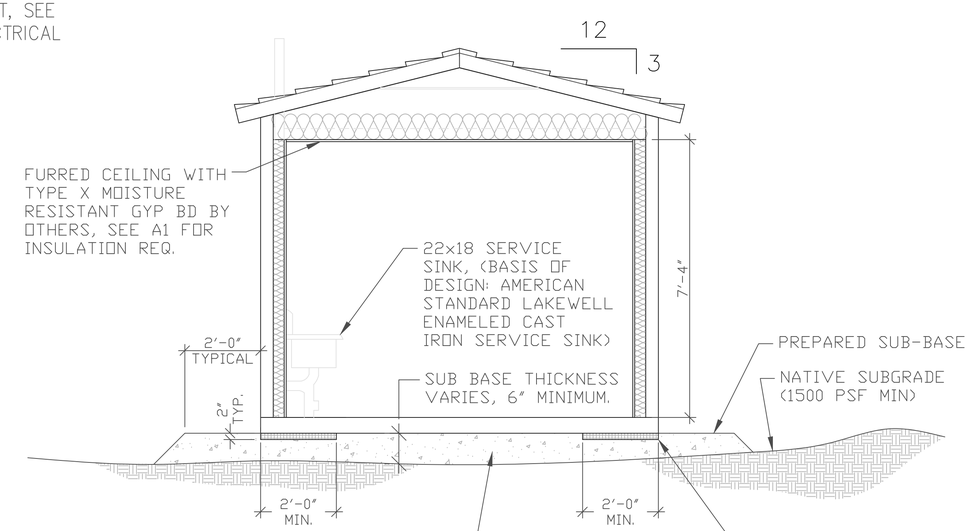

PRIOR TO PLACEMENT OF BUILDING A PROPERLY PREPARED SUB-BASE SHALL BE PROVIDED. SUB-BASE SHALL BE A MINIMUM OF 6" THICK AND CONSIST OF ¾" MINUS CRUSHED ROCK COMPACTED TO 95% OF OPTIMUM DENSITY IN ACCORDANCE WITH ASTM D 1557. FINISHED SURFACE OF SUB-BASE SHALL BE UNIFORMLY LEVEL, NOT VARYING MORE THAT ½" FROM A TRUE HORIZONTAL PLANE. REFER TO BUILDING HANDLING SHEET FOR SUB-BASE REQUIREMENTS DURING BUILDING PLACEMENT. (PREPARED SUB-BASE NOT BY CXT).

EXTRUDED POLYSTYRENE (XPS) BOARD INSULATION TYPE IV, 25 PSI MINIMUM WITH R-VALUE OF 5 PER INCH OF THICKNESS AND SQUARE EDGES (BASIS OF DESIGN: DUPONT STYROFOAM BRAND SCOREBOARD) - SEE A1 FOR INSULATION REQ.

3 A3 BUILDING SECTION

SCALE: 1/2" = 1'-0"

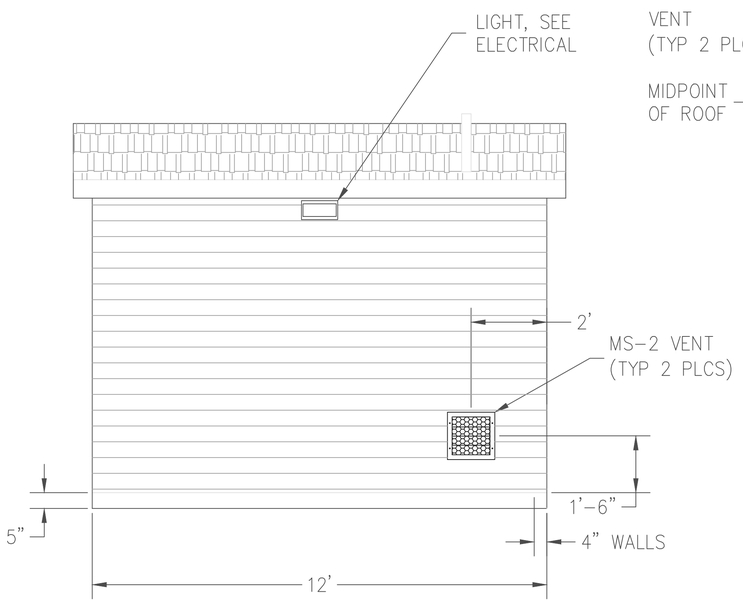

4 A3 SOUTH ELEVATION

SCALE: 1/2" = 1'-0"

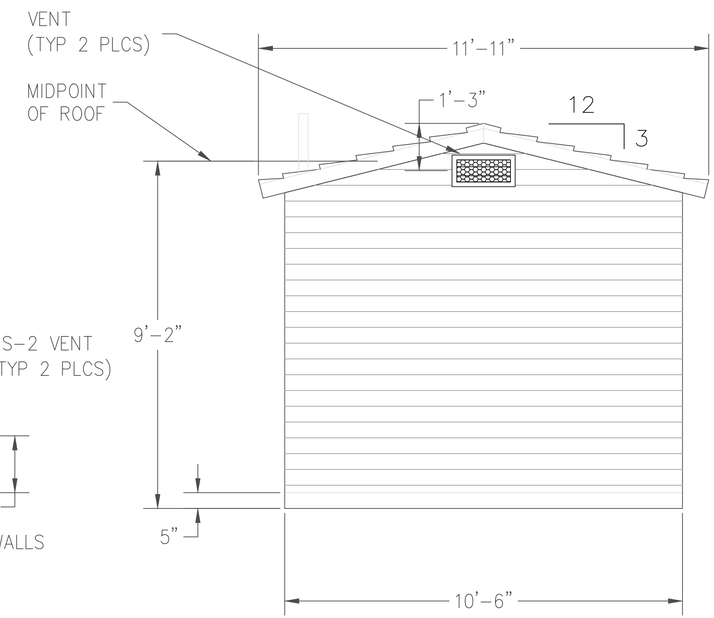

5 A3 WEST ELEVATION

SCALE: 1/2" = 1'-0"

DESIGN CRITERIA

GENERAL NOTES APPLY TO ALL PANELS UNLESS SPECIFICALLY NOTED OTHERWISE

LOADS:	SNOW:	350 PSF
	FLOOR:	400 PSF
	WIND:	150 MPH
	SEISMIC:	CAT. E
COLOR:	WALLS:	CHARCOAL GREY
	ROOF:	EVERGREEN
TEXTURE:	WALLS:	HORIZONTAL LAP
	ROOF:	CEDAR SHAKE

DESIGNED: OTAK	SUB SHEET NO. A3	TITLE OF SHEET BUILDING ELEVATIONS & SECTION	DRAWING NO. 90% CD
CADD CJ			PMIS/PKG NO. 19823
TECH. REVIEW: DS		ST. HELENS LIFT STATION-ELEC. CTRL. BLDG.	SHEET 3 OF 3
DATE: 01/07/22			