St. Helens - Riverwalk

Structural Calculations

St. Helens, Oregon

STRUCTURAL
REGISTERED PROFESSIONAL
ENGINEER
79,377PE
OREGON
SEP 13, 2011
SEAN M. CLARK

Sean Clark Sean Clark 2023.04.27 16:07:08-07'00'

RENEWS: 12-31-2023

Prepared By:
Otak, Inc.
700 Washington Street, Suite 300
Vancouver, WA 98660

May 12, 2023

Otak

Design Criteria

Stage Canopy, Pavilion Canopy, Retaining Walls (MSE & CIP)

Risk Category II

Codes: 2022 OSSC, ASCE 7-16

Seismic: Cantilevered Columns (Steel, Ordinary)

$R = 1.25$, $\Omega_0 = 1.25$, $C_d = 1.25$

$S_{DS} = \underline{0.664g}$ (From Geotech Report)

Wind: Ultimate wind speed = 120 mph

Wind Exposure D

Snow: Minimum Roof Snow load = 25 psf

Roof Dead Load:

Roofing	3.0 psf
Sheathing	2.0 psf
Skylights	3.0 psf
Bridging/Framing	3.0 psf
Equipment (Stage)	3.0 psf
Misc. MEP	4.0 psf
ΣDL =	18.0 psf

Mat foundations reinforced to satisfy §18.6.3.1 (ACI 318)
- Recomendation from Geotech Report

$\sigma_a = 2{,}000$ psf (May be increased by 1.5 for wind/seismic)

$\gamma_p = 250$ pcf, $\mu = 0.40$

CIP walls: $\gamma_a = 35$ pcf, $EQ = 7(H^2)$ @ $0.6H$

Frost Depth = 12"

project St. Helens - Riverwalk job# 20026 date June 2022 by [illegible]

checked by S Nettleton 4/20/2023 page _____ of _____

Otak

265 Strand Street, St. Helens, OR 97051
Phone: (503) 397-6272 Fax: (503) 397-4016
www.sthelensoregon.gov

Climatic and Geographic Design Criteria for the City of St Helens

Based on the 2021 Oregon Residential Specialty Code (ORSC)

Snow Load = Site specific ground snow loads, shall be those set forth in the online lookup tool at www.snowloads.seao.org/lookup.html and adjusted per Table R301.2.3.1. Minimum ground snow load for prescriptive design is 36psf. Minimum roof snow load for engineered design is 25psf.

Ultimate Design Wind Speed = 120mph (Columbia County Special Wind Region)

Wind Exposure Category = Determined by site conditions (see R301.2.1.3 2021 ORSC)

Seismic Category = D_1

Weathering = Moderate

Frost Line Depth = 12 inches

Decay = Moderate

Strand St & Cowlitz St, St Helens, OR 97051, USA

Latitude, Longitude: 45.8622831, -122.7965645

Date	6/3/2022, 11:12:38 AM
Design Code Reference Document	ASCE7-16
Risk Category	II
Site Class	D - Default (See Section 11.4.3)

Type	Value	Description
S_S	0.829	MCE_R ground motion. (for 0.2 second period)
S_1	0.398	MCE_R ground motion. (for 1.0s period)
S_{MS}	0.995	Site-modified spectral acceleration value
S_{M1}	null -See Section 11.4.8	Site-modified spectral acceleration value
S_{DS}	0.664	Numeric seismic design value at 0.2 second SA
S_{D1}	null -See Section 11.4.8	Numeric seismic design value at 1.0 second SA

Type	Value	Description
SDC	null -See Section 11.4.8	Seismic design category
F_a	1.2	Site amplification factor at 0.2 second
F_v	null -See Section 11.4.8	Site amplification factor at 1.0 second
PGA	0.379	MCE_G peak ground acceleration
F_{PGA}	1.221	Site amplification factor at PGA
PGA_M	0.462	Site modified peak ground acceleration
T_L	16	Long-period transition period in seconds
SsRT	0.829	Probabilistic risk-targeted ground motion. (0.2 second)
SsUH	0.932	Factored uniform-hazard (2% probability of exceedance in 50 years) spectral acceleration
SsD	1.5	Factored deterministic acceleration value. (0.2 second)
S1RT	0.398	Probabilistic risk-targeted ground motion. (1.0 second)
S1UH	0.459	Factored uniform-hazard (2% probability of exceedance in 50 years) spectral acceleration.
S1D	0.638	Factored deterministic acceleration value. (1.0 second)
PGAd	0.521	Factored deterministic acceleration value. (Peak Ground Acceleration)
C_{RS}	0.89	Mapped value of the risk coefficient at short periods
C_{R1}	0.867	Mapped value of the risk coefficient at a period of 1 s

Stage Roof

Check joists: Spacing = 16" o.c.

$\omega_{DL} = 18psf(1.33') = 24plf$

$\omega_{SL} = 25psf(1.33') = 33plf$

Used Forté: All √'s OK

Use: LVL 1 3/4 x 11 7/8 @ 16" o.c. 2.0E

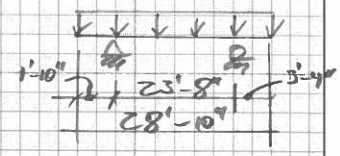

Joist

To check radiused beam:

Span = 36'-0"

Trib. = 15'-2"

$\omega_{DL} = 20psf(15.17') = 303plf$

$\omega_{SL} = 25psf(15.17') = 379plf$

P = 500# (Sound System/Lighting)

Used Forté: All √'s OK

Use: GL 8 3/4 x 22 1/2 24F-V8

Check radial tension: M = 124,331 lbft

R = 40'-7"

$f_r = \frac{3(124,330 lb\cdot ft)(12"/'')}{2(40.583')(12"/'')(8\frac{3}{4}")(22\frac{1}{2}")} = 23.3psi$

$F'_{c\perp} = 560psi$, $\frac{1}{3}F'_v = \frac{1.15(265psi)}{3} = 102psi > 23.3psi$ √OK

To check steel beam: Try W18 x 46

$M_{n/x} = 50ksi(90.7k\cdot in)(\frac{1}{1.67}) = 226 k\cdot ft$

$M_{ASD} = 124.3k\cdot ft < 226 k\cdot ft$ √OK

$\Delta = \frac{5(0.692klf)(36')^4(1,728in^3/ft)}{384(29,000ksi)(712in^4)} = 1.25"$

$\Rightarrow \frac{36'(12"/'')}{1.25"} = L/346 < L/240$ √OK

Use: W18 x 46

project St. Helens - Riverwalk job# 20028 date June 2022 by SC

checked by _____ page _____ of _____

Otak

FORTEWEB

MEMBER REPORT

5 PASSED

Level, Roof: Joist

1 piece(s) 1 3/4" x 11 7/8" 2.0E Microllam® LVL @ 16" OC

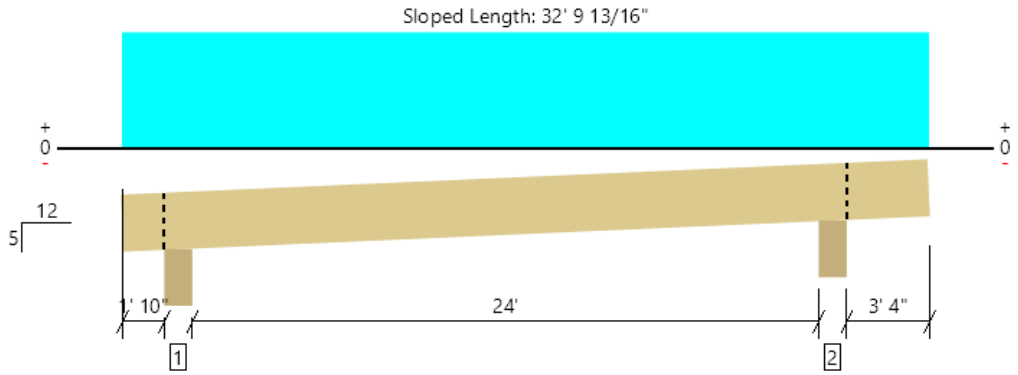

All locations are measured from the outside face of left support (or left cantilever end). All dimensions are horizontal.

Member Length : 33' 2 3/4"

System : Roof
Member Type : Joist
Building Use : Residential
Building Code : IBC 2018
Design Methodology : ASD
Member Pitch : 5/12

Design Results	Actual @ Location	Allowed	Result	LDF	Load: Combination (Pattern)
Member Reaction (lbs)	955 @ 26' 8 1/8"	7998 (6.75")	Passed (12%)	--	1.0 D + 1.0 S (Adj Spans)
Shear (lbs)	670 @ 25' 5 13/16"	4541	Passed (15%)	1.15	1.0 D + 1.0 S (Adj Spans)
Moment (Ft-lbs)	4288 @ 14' 3 1/4"	10673	Passed (40%)	1.15	1.0 D + 1.0 S (Alt Spans)
Live Load Defl. (in)	0.647 @ 14' 4 3/8"	1.330	Passed (L/494)	--	1.0 D + 1.0 S (Alt Spans)
Total Load Defl. (in)	1.134 @ 14' 4 1/4"	1.774	Passed (L/282)	--	1.0 D + 1.0 S (Alt Spans)

- Deflection criteria: LL (L/240) and TL (L/180).
- Overhang deflection criteria: LL (2L/240) and TL (2L/180).
- A 4% increase in the moment capacity has been added to account for repetitive member usage.
- Upward deflection on right cantilever exceeds 0.4".

Supports	Bearing Length			Loads to Supports (lbs)			Accessories
	Total	Available	Required	Dead	Snow	Factored	
1 - Beveled Plate - DF	6.75"	6.75"	1.50"	370	478	848	Blocking
2 - Beveled Plate - DF	6.75"	6.75"	1.50"	418	537	955	Blocking

- Blocking Panels are assumed to carry no loads applied directly above them and the full load is applied to the member being designed.

Lateral Bracing	Bracing Intervals	Comments
Top Edge (Lu)	Continuous	
Bottom Edge (Lu)	End Bearing Points	

Vertical Load	Location (Side)	Spacing	Dead (0.90)	Snow (1.15)	Comments
1 - Uniform (PSF)	0 to 30' 3 1/2"	16"	18.0	25.0	Default Load

Weyerhaeuser Notes

Weyerhaeuser warrants that the sizing of its products will be in accordance with Weyerhaeuser product design criteria and published design values. Weyerhaeuser expressly disclaims any other warranties related to the software. Use of this software is not intended to circumvent the need for a design professional as determined by the authority having jurisdiction. The designer of record, builder or framer is responsible to assure that this calculation is compatible with the overall project. Accessories (Rim Board, Blocking Panels and Squash Blocks) are not designed by this software. Products manufactured at Weyerhaeuser facilities are third-party certified to sustainable forestry standards. Weyerhaeuser Engineered Lumber Products have been evaluated by ICC-ES under evaluation reports ESR-1153 and ESR-1387 and/or tested in accordance with applicable ASTM standards. For current code evaluation reports, Weyerhaeuser product literature and installation details refer to www.weyerhaeuser.com/woodproducts/document-library.

The product application, input design loads, dimensions and support information have been provided by ForteWEB Software Operator

ForteWEB Software Operator	Job Notes
Sean Clark Otak (360) 906-9438 sean.clark@otak.com	

Weyerhaeuser

11/18/2022 4:20:35 PM UTC

ForteWEB v3.4, Engine: V8.2.2.122, Data: V8.1.3.0

File Name: Riverwalk

FORTEWEB

MEMBER REPORT

6 PASSED

Level, Drop Beam-2
1 piece(s) 8 3/4" x 22 1/2" 24F-V4 DF Glulam

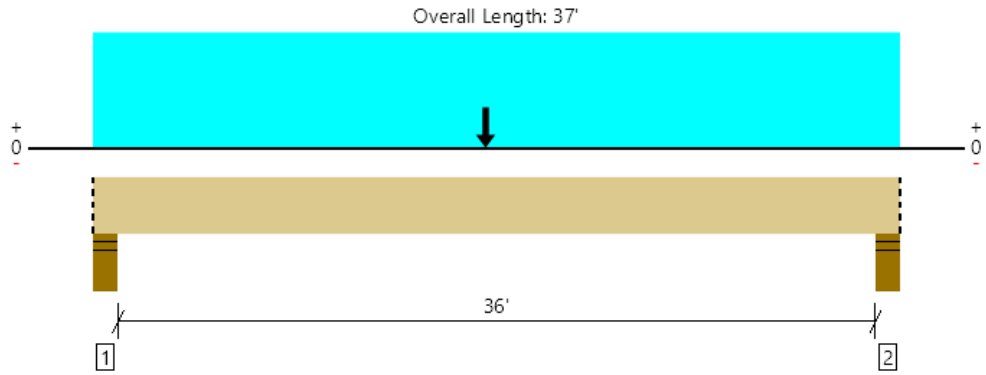

All locations are measured from the outside face of left support (or left cantilever end). All dimensions are horizontal.

Design Results	Actual @ Location	Allowed	Result	LDF	Load: Combination (Pattern)
Member Reaction (lbs)	13759 @ 4 1/2"	22313 (6.00")	Passed (62%)	--	1.0 D + 1.0 S (All Spans)
Shear (lbs)	12026 @ 2' 4 1/2"	39998	Passed (30%)	1.15	1.0 D + 1.0 S (All Spans)
Pos Moment (Ft-lbs)	124331 @ 18' 2"	143123	Passed (87%)	1.15	1.0 D + 1.0 S (All Spans)
Live Load Defl. (in)	0.985 @ 18' 6"	1.813	Passed (L/442)	--	1.0 D + 1.0 S (All Spans)
Total Load Defl. (in)	1.954 @ 18' 5 15/16"	2.417	Passed (L/223)	--	1.0 D + 1.0 S (All Spans)

System : Roof
Member Type : Drop Beam
Building Use : Residential
Building Code : IBC 2018
Design Methodology : ASD
Member Pitch : 0/12

- Deflection criteria: LL (L/240) and TL (L/180).
- Allowed moment does not reflect the adjustment for the beam stability factor.
- Critical positive moment adjusted by a volume factor of 0.84 that was calculated using length L = 36' 3".
- The effects of positive or negative camber have not been accounted for when calculating deflection.
- The specified glulam is assumed to have its strong laminations at the bottom of the beam. Install with proper side up as indicated by the manufacturer.
- Applicable calculations are based on NDS.

Supports	Bearing Length			Loads to Supports (lbs)			Accessories
	Total	Available	Required	Dead	Snow	Factored	
1 - Stud wall - SPF	6.00"	6.00"	3.70"	6748	7012	13759	Blocking
2 - Stud wall - SPF	6.00"	6.00"	3.70"	6734	7012	13745	Blocking

• Blocking Panels are assumed to carry no loads applied directly above them and the full load is applied to the member being designed.

Lateral Bracing	Bracing Intervals	Comments
Top Edge (Lu)	37' o/c	
Bottom Edge (Lu)	37' o/c	

•Maximum allowable bracing intervals based on applied load.

Vertical Loads	Location (Side)	Tributary Width	Dead (0.90)	Snow (1.15)	Comments
0 - Self Weight (PLF)	0 to 37'	N/A	47.8	--	
1 - Uniform (PLF)	0 to 37' (Front)	N/A	303.0	379.0	Default Load
2 - Point (lb)	18' (Front)	N/A	500	-	

Weyerhaeuser Notes

Weyerhaeuser warrants that the sizing of its products will be in accordance with Weyerhaeuser product design criteria and published design values. Weyerhaeuser expressly disclaims any other warranties related to the software. Use of this software is not intended to circumvent the need for a design professional as determined by the authority having jurisdiction. The designer of record, builder or framer is responsible to assure that this calculation is compatible with the overall project. Accessories (Rim Board, Blocking Panels and Squash Blocks) are not designed by this software. Products manufactured at Weyerhaeuser facilities are third-party certified to sustainable forestry standards. Weyerhaeuser Engineered Lumber Products have been evaluated by ICC-ES under evaluation reports ESR-1153 and ESR-1387 and/or tested in accordance with applicable ASTM standards. For current code evaluation reports, Weyerhaeuser product literature and installation details refer to www.weyerhaeuser.com/woodproducts/document-library.

The product application, input design loads, dimensions and support information have been provided by ForteWEB Software Operator

ForteWEB Software Operator	Job Notes
Sean Clark Otak (360) 906-9438 sean.clark@otak.com	

Weyerhaeuser

11/18/2022 4:15:15 PM UTC
ForteWEB v3.4, Engine: V8.2.2.122, Data: V8.1.3.0
File Name: Riverwalk

Stage - Roof

Check Support Beam: Weak axis bending

Seismic load from GL 8 3/4 x 22 1/2:

$V_{ASD} = 2.55$ kip (w/ Ω_0)

$M_{y-y} = 2.55k(3.33') = 102$ k·in

$f_b = \frac{6(102k\cdot in)}{18"(5\frac{1}{2}")^2} = 1{,}124$ psi

$F_b' = (1.6)(1.07)(1{,}550\text{ psi}) = \underline{2{,}654\text{ psi} > 1{,}124\text{ psi}}$ ✓OK

Check w/ DL: Interaction (Gravity from Forté)

$\Rightarrow \frac{24{,}911}{49{,}384} + \frac{1124}{2{,}654} = \underline{0.928 < 1.0}$ ✓OK

Check @ 0.75 SL + 0.75 EQ

$\Rightarrow 0.75\left(\frac{49{,}717}{64{,}738}\right) + 0.75\left(\frac{1124}{2{,}654}\right) = \underline{0.922 < 1.0}$ ✓OK

Use: $\boxed{\text{GL } 5\frac{1}{2} \times 18 \text{ 24F-V8, or GL } 6\frac{3}{4} \times 18 \text{ 24F-V8}}$ ⇐ chosen

Analysis is conservative, extension = 3'-0" (3'-4" checked)

FORTEWEB

MEMBER REPORT

8 PASSED

Level, Roof: Support Beam_DL
1 piece(s) 5 1/2" x 18" 24F-V8 DF Glulam

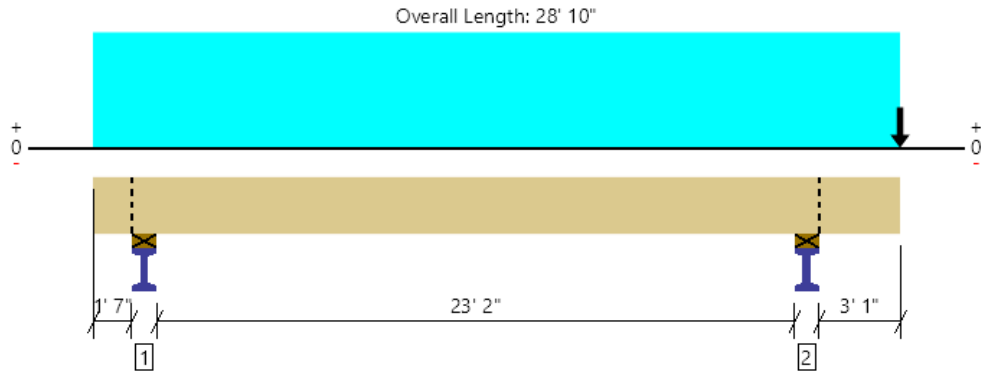

All locations are measured from the outside face of left support (or left cantilever end). All dimensions are horizontal.

Design Results	Actual @ Location	Allowed	Result	LDF	Load: Combination (Pattern)
Member Reaction (lbs)	9118 @ 25' 6"	20625 (6.00")	Passed (44%)	--	1.0 D (All Spans)
Shear (lbs)	7470 @ 27' 3"	15741	Passed (47%)	0.90	1.0 D (All Spans)
Pos Moment (Ft-lbs)	0 @ N/A	N/A	Passed (N/A)	--	N/A
Neg Moment (Ft-lbs)	-24911 @ 25' 6"	49384	Passed (50%)	0.90	1.0 D (All Spans)
Live Load Defl. (in)	0.000 @ 0	0.200	Passed (2L/999+)	--	1.0 D (All Spans)
Total Load Defl. (in)	0.240 @ 28' 10"	0.444	Passed (2L/334)	--	1.0 D (All Spans)

System : Roof
Member Type : Drop Beam
Building Use : Residential
Building Code : IBC 2018
Design Methodology : ASD
Member Pitch : 0/12

- Deflection criteria: LL (L/240) and TL (L/180).
- Overhang deflection criteria: LL (0.2") and TL (2L/180).
- A 7.6% decrease in the moment capacity has been added to account for lateral stability.
- Critical negative moment adjusted by a volume factor of 0.92 that was calculated using length L = 28' 10".
- -447 lbs uplift at support located at 1' 10". Strapping or other restraint may be required.
- The effects of positive or negative camber have not been accounted for when calculating deflection.
- Applicable calculations are based on NDS.

Supports	Bearing Length			Loads to Supports (lbs)		Accessories
	Total	Available	Required	Dead	Factored	
1 - Plate on steel - DF	6.00"	6.00"	1.50"	-447	-447	Blocking
2 - Plate on steel - DF	6.00"	6.00"	2.65"	9118	9118	Blocking

- Blocking Panels are assumed to carry no loads applied directly above them and the full load is applied to the member being designed.

Lateral Bracing	Bracing Intervals	Comments
Top Edge (Lu)	End Bearing Points	
Bottom Edge (Lu)	End Bearing Points	

Vertical Loads	Location (Side)	Tributary Width	Dead (0.90)	Comments
0 - Self Weight (PLF)	0 to 28' 10"	N/A	24.1	
1 - Uniform (PSF)	0 to 28' 10" (Front)	1'	20.0	Default Load
2 - Point (lb)	28' 10" (Front)	N/A	7400	

Weyerhaeuser Notes

Weyerhaeuser warrants that the sizing of its products will be in accordance with Weyerhaeuser product design criteria and published design values. Weyerhaeuser expressly disclaims any other warranties related to the software. Use of this software is not intended to circumvent the need for a design professional as determined by the authority having jurisdiction. The designer of record, builder or framer is responsible to assure that this calculation is compatible with the overall project. Accessories (Rim Board, Blocking Panels and Squash Blocks) are not designed by this software. Products manufactured at Weyerhaeuser facilities are third-party certified to sustainable forestry standards. Weyerhaeuser Engineered Lumber Products have been evaluated by ICC-ES under evaluation reports ESR-1153 and ESR-1387 and/or tested in accordance with applicable ASTM standards. For current code evaluation reports, Weyerhaeuser product literature and installation details refer to www.weyerhaeuser.com/woodproducts/document-library.

The product application, input design loads, dimensions and support information have been provided by ForteWEB Software Operator

ForteWEB Software Operator	Job Notes
Sean Clark Otak (360) 906-9438 sean.clark@otak.com	

Weyerhaeuser

11/18/2022 4:23:45 PM UTC
ForteWEB v3.4, Engine: V8.2.2.122, Data: V8.1.3.0
File Name: Riverwalk

Stage - Columns

Check Columns - Cantilevered : Steel, Ordinary

$R = 1.25 \quad \Omega_0 = 1.25 \quad C_d = 1.25 \quad S_{DS} = 0.664g$

$W_{EQ} = 20psf(37.25'/2)(28.83'/2) = 5.37kip$

$V_{B\ ASD/Col.} = \frac{0.664g}{(1.25/1.0)}(5.37K)(\frac{1}{1.4}) = 2.04kip$

Max Column height = 13'-0" (A.F.F.)

$M_{ASD} = 13'(2.04K) = 318k\cdot in$

Try HSS 6x6x3/8 : $M_n/\Omega = 46ksi(15.8in^3)(\frac{1}{1.67})$

$\Rightarrow M_n/\Omega = \underline{435k\cdot in > 318k\cdot in \ \checkmark OK}$

Check deflection : Increase to HSS 6x6x1/2

$\Delta = \frac{2.04K(13')^3(1728in/ft)}{3(29{,}000ksi)(48.3in^4)} = 1.84"$

$C_d = 1.25 \Rightarrow 1.25(1.84")(1.4) = 3.23"$

$\Delta_a = 0.025(13')(12"/')= \underline{3.90" > 3.23" \ \checkmark OK}$

Check §12.2.5.2 : $\frac{KL}{r} = \frac{2.0(13')(12"/')}{2.23"} = 140 < 200 \ \checkmark OK$

$\phi P_n = 112.0kip$ (Table 4-4)

$P_u = 1.2(5.37K + 0.46K) + 0.20(6.71K) = 8.34kip$

15% of $\phi P_n = \underline{16.8kip > 8.34kip \ \checkmark OK}$

Use : $\boxed{\text{HSS 6x6x1/2 is adequate} \quad H_{max} = \cancel{13'-0"}\ 11'-2"}$

For anchor calc checks

Actual column height = 11'-2"

To check anchor bolts for wind uplift :

$M_{u\,wind} = \frac{2.44K}{0.6}(11.17') = 45.4k\cdot ft = 545k\cdot in$

$P_{u\,wind} = \frac{8.22K}{0.6} = 13.7kip$

$M_{ASD\,wind} = 2.44K(11.17') = \underline{327k\cdot in < 435k\cdot in \ \checkmark OK}$

project St. Helens - Riverwalk job# 20028 date July 2022 by SC

checked by _____ page _____ of _____

Otak

Columns-Wind Load

Compare wind loading to seismic

Projected roof area (due to slope):

$A_R = 36'/2(8.33'/2) = 75\ ft^2$ per column

May also support sliding door panels (Back (2) columns)

$A_P = 36'/2(11.17'/4) = 50.3\ ft^2$ (1/2 load into floor track)

Wind pressure: $V_{ult} = 120mph$, Exp. D

$q_h = 0.00256(1.08)(1.0)(0.85)(1.0)(120mph)^2 = 33.8psf$

Open Building: $GC_{pi} = 0$

$\left(\frac{C_{NW}+C_{NL}}{2}\right) = \left(\frac{2.1+0.6}{2}\right) = 1.35$ (roof)

$C_p = 0.80$ (wall)

To compare w/ seismic, check ASD:

$p = 0.6(33.8psf)[1.35(75ft^2)(0.85) + 0.8(50.3ft^2)(0.85)]$

$\Rightarrow p = 2.44kip$

Seismic includes $\Omega_0 = 1.25$

$V_{ASD\,EQ\,\Omega_0} = 1.25(2.04k) = \underline{2.55k > 2.44k\ \checkmark OK}$

use: $\boxed{\text{Seismic controls w/ } \Omega_0}$

project St. Helens-Riverwalk job# 20028 date July 2022 by SC

checked by _____ page _____ of _____

Otak

Cantilevered Column - Base Connection

Moment at cant. col. $\Rightarrow M_u = 1.4(318\,k\cdot in) = 445\,k\cdot in$

$\Omega_0 = 1.25 \Rightarrow M_u = 1.25(445\,k\cdot in) = 557\,k\cdot in$

Size rods:

$T/C = \frac{557\,k\cdot in}{9\frac{1}{2}''} = 58.6\,kip$

per rod: $T_u = 58.6^k/2 = 29.3\,kip$

Wind: $T/C_u = \frac{545\,k\cdot in}{9\frac{1}{2}''} = 57^k$

$T_u = \frac{57^k}{2} + \frac{13.7^k}{4} = 32.1\,kip$

Wind: $34.1^k > 32.1^k$ ✓OK

Try 1"ø F1554 GR 55 ksi rods: $f_{uta} = 75\,ksi$ min

$\Rightarrow \phi P_n = 0.75(0.606\,in^2)(75\,ksi) = \underline{34.1\,kip > 29.3\,kip}$ ✓OK

Size anchor reinforcement:

Each leg of rebar takes half tension

$T_u/leg = 58.6^k/2 = 29.3\,kip$

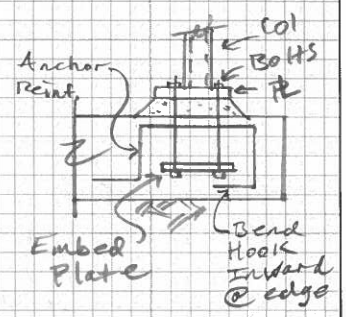

Capacity of #4 bar:

$\phi T_n = 0.75(0.20\,in^2)(90\,ksi) = 13.5\,kip$

$\phi T_n = 0.9(0.20\,in^2)(60\,ksi) = 10.8\,kip$ ← Controls

Wind: $\frac{32.1^k}{10.8^k} = 2.9$ $\Rightarrow 2.9 < 3$ ✓OK

No. of required bar $= 29.3^k/10.8^k = \underline{2.71 \rightsquigarrow \text{use } 3.0}$

Check $l_{dh} = \left(\frac{60{,}000(1.0)(0.70)(1.0)}{50(1.0)(34{,}000\,psi)}\right)(\frac{1}{2}'') = 6.64''$

Increase depth of footing to 16" to accommodate development lengths

Use continuity plate ("Embed plate") at bottom:

§17.1.2 states chp. 17 not req'd w/ plate (chp. 17 is satisfied through the anchor reinforcement, see above: §17.4.2.9 ✓OK)

Check Breakout to be conservative: w/ 4" edge distance in (2) directions

$A_p = [4'' + 9'' + 1.5(12'')]^2 = 961\,in^2$

$\phi P_c = 0.65(4)(961\,in^2)(\sqrt{4{,}000\,psi}) = \underline{158\,kip > 58.6\,kip}$ ✓OK

Use: (4) 1"ø F1554 GR55 rods w/ embed plate @ 12" w/ (3) #4 ⊓⊔ rebar w/ STD 90° hooks as anchor reinforcement, each way

Mat Foundations

From Geotechnical report: Mat foundations required
⇒ To satisfy § 12.13.9.2.1.2 (For liquifiable soils) ASCE 7
⇒ Foundation to satisfy § 18.6.3.1 (Rebar detailing) ACI 318

Stage: Mat foundation = 12" thick
Rebar = Top + bottom, each way:

$A_s = \frac{3(\sqrt{4{,}000\,psi})}{60{,}000\,psi}(12"\times 9") = 0.342\,in^2$

$A_s = \frac{200}{60{,}000\,psi}(12"\times 9") = 0.360\,in^2$ ← Controls

Check #5's @ 16" o.c., each way, top + bottom

$A_s = 2\left(\frac{0.31\,in^2}{1.33'}\right) = \underline{0.465\,in^2 > 0.360\,in^2 \checkmark OK}$

Check Pavilion: 10" thick mat

$A_s = \frac{200}{60{,}000\,psi}(12"\times 7") = 0.28\,in^2$

Check #4's @ 16" o.c.

$A_s = 2\left(\frac{0.20\,in^2}{1.33'}\right) = \underline{0.30\,in^2 > 0.28\,in^2 \checkmark OK}$

Use: $\boxed{\text{\#5's @ 16" o.c., each way, top + bottom at stage; \#4's (same spacing) at pavilion}}$

Check weld to base plate:

$S_w = 6"(6") + (6")^2/2 = 48.0\,in^3/in$

$f_b = \frac{557\,k\cdot in}{48\,in^3} = 11.6\,k/in$

# of req'd 16th's $= \frac{11.6\,k/in}{1.392\,k/in} = \underline{8.34 < 9.0 \checkmark OK}$

Check plate thickness:

$M_{pl} = 29.3k(3") = 87.9\,k\cdot in$

$t_p = \left(\frac{4(87.9\,k\cdot in)}{0.9(36\,ksi)(6")}\right)^{1/2} = \underline{1.34" < 1\,3/8" \checkmark OK}$

Use: $\boxed{\text{9/16" All-Around Fillet weld and PL 1 3/8 x 12 x 1'-0" A36 Base plate}}$

project St. Helens - Riverwalk job# 20028 date Nov. 2022 by JC

checked by _____ page _____ of _____

Otak

W18x46 Torsion

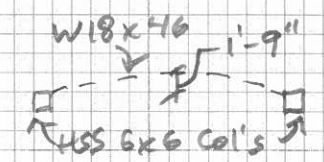

Plan View

Max extension = 1'-9" (check 2'-0")

To check column, combine w/ seismic
⇒ check DL + SL

$w_{DL} = 303\,plf$

$P_{DL} = \frac{1}{2}(303\,plf)(34') + 500\# = 5.65\,k$

$\tau = \frac{1}{2}(5.65\,k)(2') = 5.65\,k\cdot ft$

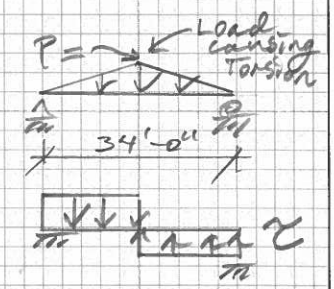

Torsion FBD

Combine w/ seismic = 318 k·in + 5.65 k·ft (12"/1')
⇒ M_{ASD} = 386 k·in

From prev. calcs: M_n/Ω = 545 k·in
⇒ 545 k·in > 386 k·in ✓OK

wind
395 k·in
< 545 k·in
✓OK

To check 0.75 (EQ + SL):

$M_{ASD} = 0.75\left(318\,k\cdot in + \left(\frac{682\,plf}{303\,plf}\right)(5.65\,k\cdot ft)(12''/1')\right)$

⇒ M_{ASD} = 353 k·in < 386 k·in ✓OK

wind
360 k·in
< 395 k·in
✓OK

Check weld:

$M_{ASD} = 2.04\,k(18'') + 5.65\,k\cdot ft(12'') = 104.5\,k\cdot in$

$S_w = 6''(6'') + (6'')^2/3 = 48.0\,in^3/in$

$f_w = \frac{104.5\,k\cdot in}{48\,in^3} = 2.178\,k/in$

# of Req'd 16th's = $\frac{2.18\,k/in}{0.927\,k/in}$ = 2.35 < 5.0 ✓OK

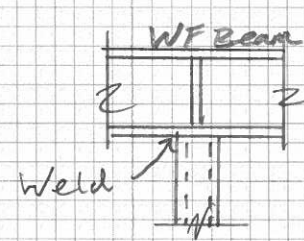

Section

Use: HSS 6x6x 1/2 column w/ 5/16" All-Around fillet weld is adequate

project St. Helens Riverwalk job# 20028 date Aug 2022 by Ise

checked by _____ page _____ of _____

Otak

Check Knife Plate

Moment from Torsion: Strong axis

$M_{ASD} = 5.65\,k\cdot ft(12") = 67.8\,k\cdot in$

Moment from Siesmic: Weak axis

$M_{ASD} = 2.04\,k(2") = 4.08\,k\cdot in$

Wind $M = 4.88\,k\cdot in$

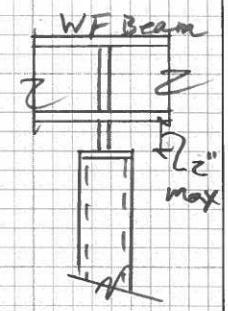

Section

Plate thickness:

$t_{pl\,min} = \left(\frac{4(4.08\,k\cdot in)}{0.6(36\,ksi)(6")}\right)^{1/2} = 0.355" < 1"$ ✓OK

$\frac{b_f d}{t^2} = \frac{6"(2")}{(1")^2} = 12$

$M_n/\Omega = 1.5(1/6)(1")(6")^2(36\,ksi)\left(\frac{1}{1.67}\right) = 194\,k\cdot in > 67.8\,k\cdot in$ ✓OK

$\Rightarrow 0.355"/1" + \frac{67.8\,k\cdot in}{194\,k\cdot in} = 0.70 < 1.0$ ✓OK

wind $0.74 < 1.0$ ✓OK

Welds:

$S_{strong} = 6"(1") + (6")^2/3 = 18.0\,in^2/in$

$S_{weak} = 1"(6") + (1")^2/3 = 6.33\,in^2/in$

$f_w = \left[\left(67.8/18\right)^2 + \left(4.08/6.33\right)^2\right] = 3.82\,k/in$

# of Req'd 16th's $= \frac{3.82\,k/in}{0.927\,k/in} = 4.12 < 5.0$ ✓OK

wind $4.15 < 5.0$ ✓OK

use: $\boxed{\text{PL } 1 \times 2 \times 0'-6" \text{ A36 knife plate w/ } 5/16" \text{ Fillet weld all-around, is adequate}}$

project St. Helens - Riverwalk job# 20028 date Dec 2022 by [illegible]

checked by _____ page _____ of _____

Otak

Stage - Roof Diaphragm

Check shear in diaphragm:

$\Sigma V_{ASD} = 4(2.04k) = 8.16$ kip

Diaphragm over continuous beam/blocking

$V_{ASD} = \frac{8.16k}{2(20')} = 204$ plf (case 1)

$V_{ASD} = \frac{8.16k}{2(33.33')} = 122$ plf (case 3)

Diaphragm ratio $= \frac{33.33'}{20'} = 1.67:1 < 3:1$ ✓OK

use 8d Nails @ 6" o.c. edge nailing + 12" o.c. in field
- unblocked, 3/8" thick plywood sheathing

Case 1: $V_a = \frac{430 plf}{2.0} = 215$ plf > 204 plf ✓OK

Case 3: $V_a = \frac{320 plf}{2.0} = 160$ plf > 122 plf ✓OK

use typical joist as chord:

$M_{ASD} = \frac{204 plf (33.33')^2}{8} = 28.3$ k·ft

$T/C = \frac{28.3 k \cdot ft}{20'} = 1.42$ kip

$f_t = 1.25\left[\frac{1.42k}{1.25"(11\ 7/8")}\right] = 85.2$ psi

$F_t' = 1.6(1,895 psi) = 3,032$ psi > 85.2 psi ✓OK

Compression flange braced by roof: ✓OK by Inspection

use: unblocked diaphragm w/ 3/8" sheathing w/ 8d Nails @ 6" o.c. edge nailing and 12" o.c. in field is adequate
Typ. joist may be used as chord

Wind has higher load + higher capacities:

Case 1: 244 plf < 300 plf ✓OK

Case 3: 146 plf < 225 plf ✓OK

HSS Tube ~ At Back Wall

Check Load in both directions

Span = 34'-0"

Try HSS 6x6x3/8, but check weight of HSS 8x6x3/8

$\omega_{DL} = 32.5\,plf + 17.5\,plf = 50\,plf$

$\omega_{wind} = 25\,psf\,(10'/c) = 125\,plf$ (ASD level)

$M_{x-x} = \frac{50\,plf\,(34')^2}{8} = 86.7\,k\cdot in$

$M_{y-y} = \frac{125\,plf\,(34')^2}{8} = 217\,k\cdot in$

$M_n/\Omega = 46\,ksi\,(15.8\,in^3)\left(\frac{1}{1.67}\right) = 435\,k\cdot in$

Interaction:

$\Rightarrow \frac{86.7}{435} + \frac{217}{435} = \underline{0.70 < 1.0 \checkmark OK}$

Check vertical deflection (Sag):

$\Delta = \frac{5(0.05\,klf)(34')^4(1728\,in/ft)}{384(29{,}000\,ksi)(39.5\,in^4)} = 1.31''$

$\Rightarrow \frac{34'(12''/'')}{1.31''} = \underline{L/311 < L/240 \checkmark OK}$

Check deflection of HSS 8x6x3/8:

$\Delta = 1.31''\left(\frac{39.5\,in^4}{79.1\,in^4}\right) = 0.655''$

$\Rightarrow \frac{34'(12''/'')}{0.655''} = \underline{L/623 < L/240 \checkmark OK}$

use: $\boxed{\text{HSS 8x6x3/8 is adequate}}$

Beam Connections

Max reaction = 13,800# (From Forté)

Bolts are shielded under roof

Check (9) 1"ø A307 Thru-Bolts, Double Shear, B = 5 1/2"

$V = 13.8\ \text{kip}$

$T/C = 13.8\text{k}\left(\frac{5\frac{1}{2}''}{8''}\right) = 9.49\ \text{kip}$

$Z'_{\perp} = 9(1.15)(3{,}000^{\#}) = 31.1\ \text{kip}$

$Z'_{\parallel} = 3(1.15)(5{,}720^{\#}) = 19.7\ \text{kip}$

$\Rightarrow \frac{13.8\text{k}}{31.1\text{k}} + \frac{9.49\text{k}}{19.7\text{k}} = \underline{0.925 < 1.0\ \checkmark\text{OK}}$

Check (12) 1"ø A307 Thru-Bolts, Double Shear, B = 8 3/4"

$Z'_{\perp} = 12(1.15)(1{,}500^{\#}) = \underline{20.7\ \text{kip} > 13.8\ \text{kip}\ \checkmark\text{OK}}$

Check Wood bearing:

$A = 5\frac{1}{2}''\left(18''/2\right) = 49.5\ \text{in}^2$

$f'_{c\perp} = \frac{9.49\text{k}}{49.5\ \text{in}^2} = \underline{192\ \text{psi} < 625\ \text{psi}\ \checkmark\text{OK}}$

use: $\boxed{\text{(9) Double Shear + (12) Single Shear — 1"ø A307 Thru-Bolts are adequate}}$

Uplift = $\underline{8{,}220^{\#} < 13{,}800^{\#}\ \checkmark\text{'s OK by Inspection}}$

project St. Helens-Riverwalk job# 20028 date Nov. 2022 by BC

checked by _____ page _____ of _____

Otak

Joist Connections

Direct bearing at stage:

$R_{ASD} = 955^{\#}$

Uplift: $\sigma_{up\,ASD} = 0.6(33.8\,psf)(1.35) - 0.6(20\,psf) = 15.4\,psf$

$\omega_{up\,ASD} = 15.4\,psf(1.33')(24'/2 + 3.5') = 318^{\#}$

Check Bearing: $\sigma = \frac{955^{\#}}{1.75''(5'')} = 109\,psi < 625\,psi$ ✓OK

Simpson H3, $T_a = 400^{\#} > 318^{\#}$ ✓OK

Check toe nails: (2) 8d (0.131" ø x 2 1/2")

$V_{ASD} = 133\,plf$

$T_{ASD} = 15.4\,psf(1.33') = 20.5\,plf$

$Z' = 1.6(0.83)(97^{\#}) = 129^{\#}$

$W' = 1.6(0.67)(32\,pli)(1\tfrac{1}{2}'') = 51.5^{\#}$

Check @ (2) per 12" ((1) each side)

$\Rightarrow \frac{133\,plf}{2(129^{\#})} + \frac{20.5^{\#}}{2(51.5^{\#})} = 0.715 < 1.0$ ✓OK

Max toenail spacing = 12" o.c.

Use: Simpson H3 clip @ each end of each joist and (2) 8d toenails @ 12" o.c. max at blocking

project St. Helens-Riverwalk job# 20028 date Nov. 2022 by Se

checked by _____ page _____ of _____

Otak

Storage Roof - Stage

Check Joists @ 16" o.c., Span = 9'-0"

$\omega_{DL} = 18psf(1.33') = 24plf$

$\omega_{SL} = 25psf(1.33') = 33plf$

$M_{ASD} = \frac{57plf(9')^2}{8} = 6.93k\cdot in$

Try 2x6: $f_b = \frac{6(6.93k\cdot in)}{1\frac{1}{2}"(5\frac{1}{2}")^2} = 916psi$

$F'_b = 1.15^{CD}(1.15^{CF})(900psi) = \underline{1,190psi > 916psi \ \checkmark OK}$

$I = \frac{1}{12}(1\frac{1}{2}")(5\frac{1}{2}")^3 = 20.8in^4$

$\Delta = \frac{5(57plf)(9')^4(1,728in^4/ft)}{384(1.6\times10^6psi)(20.8in^4)} = 0.253"$

$\Rightarrow \frac{9'(12"/1')}{0.253"} = \underline{L/427 < L/240 \ \checkmark OK}$

use: $\boxed{2x6 \text{ DF No. 2 @ } 16" \text{ o.c.}}$

Check Steel beam: Span = 17'-0"

Trib. = 9'/2 = 4.5'

$\omega_{DL} = 20psf(4.5') = 90plf$

$\omega_{SL} = 25psf(4.5') = 113plf$

$M_{ASD} = \frac{203plf(17')^2}{8} = 88k\cdot in$

Try HSS 6x4x1/4: $M_{n/\Omega} = 46ksi(8.53in^3)(\frac{1}{1.67}) = 235k\cdot in$

$\Rightarrow \underline{235k\cdot in > 88k\cdot in \ \checkmark OK}$

$\Delta = \frac{5(0.203k/ft)(17')^4(1,728in^4/ft)}{384(29,000ksi)(20.9in^4)} = 0.629"$

$\Rightarrow \frac{17'(12"/1')}{0.629"} = \underline{L/324 < L/240 \ \checkmark OK}$

use: $\boxed{HSS\ 6x4x1/4}$

Storage Roof - Stage

Check Wood beam: Span = 15'-2"

ω_{ASD} = 203plf (Same as HSS)

$M_{ASD} = \frac{203plf(15.17')^2}{8} = 70.0$ k·in

Try GL 5 1/2 x 7 1/2: $f_b = \frac{6(70k\cdot in)}{5\frac{1}{2}"(7\frac{1}{2}")^2} = 1{,}358$ psi

$F'_b = 1.15(1.07)(2{,}400psi) = 3{,}970$ psi > 1,360psi ✓OK

$I = \frac{1}{12}(5\frac{1}{2}")(7\frac{1}{2}")^3 = 193.4$ in^4

$\Delta = \frac{5(203plf)(15.17')^4(1{,}728in^2/ft^2)}{384(1.8\times10^6psi)(193.4in^4)} = 0.694"$

$\Rightarrow \frac{15.17'(12")}{0.694"} = L/262 < L/240$ ✓OK

Use: GL 5 1/2 x 7 1/2 24F-V4

project St. Helens - Riverwalk job# 20028 date June 2022 by JZC

checked by _____ page _____ of _____

Otak

Pavilion Roof

Check Beams/Joists: No top flange bracing used Forte: All ✓'s OK

Use: GL 5 1/2 x 10 1/2 for joists and GL 5 1/2 x 15 for perimeter beams. Grade = 24F-V4

Glass roof ⇝ No diaphragm

Check beams to take seismic load, out of plane

$w_{EQ} = 17psf(14'/2)\left(\frac{0.664g}{(1.25/1.0)}\right)\left(\frac{1}{1.4}\right) = 45.2plf$

$M_{y-y} = \frac{45.2plf(24')^2}{8} = 39.0k\cdot in$

$f_b = \frac{6(39k\cdot in)}{15''(5\,1/2'')^2} = 516psi$

$F_b' = (1.6)(1.07)(1,450psi) = 2,482psi > 516psi$ ✓OK

Interaction $= \frac{22.06}{44.1.5} + \frac{516}{2,482} = 0.707 < 1.0$ ✓OK

Use: Beams are adequate to take seismic

Check columns: $h = 8'-6''$

$W_{EQ} = 17psf(24')(12'+2') = 5.71kip$

$V_{B_{ASD}} = \frac{0.664g}{(1.25/1.0)}(5.71k)\left(\frac{1}{1.4}\right) = 2.17k$

Wind (Low profile)
$V_{BW} = 0.6(33.8psf)[1.35(4.5'\times12')]$
$\Rightarrow V_B = 1.49k < 2.17k$ ✓OK
seismic controls

⇒ (4) columns, Try HSS 4x4x1/4: $V_{ASD/col} = 2.17k/4 = 0.542k$

$M_{ASD} = 0.542k(8.5') = 55.3k\cdot in$

$M_n/\Omega = 46ksi(4.69in^3)\left(\frac{1}{1.67}\right) = 129k\cdot in > 55.3k\cdot in$ ✓OK

$\Delta = \frac{0.542k(8.5')^3(1,728in^3/ft^3)}{3(29,000ksi)(7.80in^4)} = 0.848''$

$C_d = 1.25 \Rightarrow 1.25(0.848'')(1.4) = 1.48''$

$\Delta_a = 0.025(8.5')(12''/1') = 2.55'' > 1.48''$ ✓OK

§12.2.5.2: 15% $\phi P_n = 0.15(42.3k) = 6.34kip$

$P_u = 1.2(1.43+0.10)+0.2(1.68k) = 2.20k < 6.34k$ ✓OK

Use: HSS 4x4x1/4 is adequate
$H_{max} = 8'-6''$

project St. Helens-Riverwalk job# 20028 date Aug. 2022 by BC

checked by _____ page ____ of ____

Otak

FORTEWEB

MEMBER REPORT

22 PASSED

Level, Roof: Pav-Joist
1 piece(s) 5 1/8" x 10 1/2" 24F-V4 DF Glulam

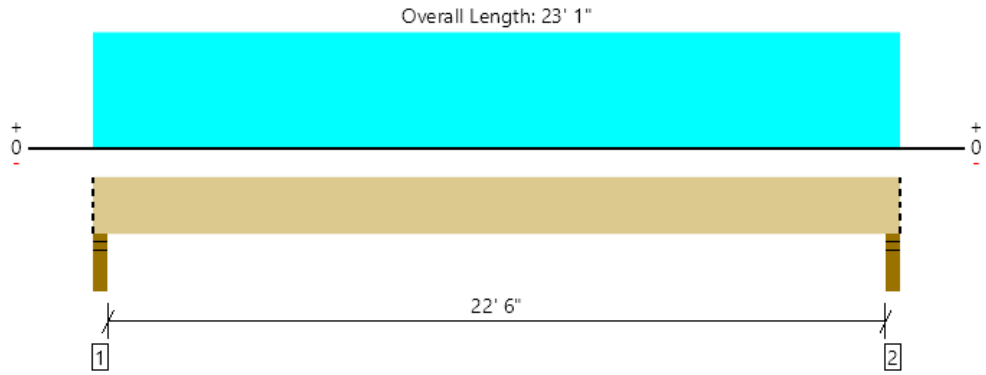

All locations are measured from the outside face of left support (or left cantilever end). All dimensions are horizontal.

Design Results	Actual @ Location	Allowed	Result	LDF	Load: Combination (Pattern)
Member Reaction (lbs)	2575 @ 2"	7623 (3.50")	Passed (34%)	--	1.0 D + 1.0 Lr (All Spans)
Shear (lbs)	2314 @ 1' 2"	11884	Passed (19%)	1.25	1.0 D + 1.0 Lr (All Spans)
Pos Moment (Ft-lbs)	14432 @ 11' 6 1/2"	22409	Passed (64%)	1.25	1.0 D + 1.0 Lr (All Spans)
Live Load Defl. (in)	0.813 @ 11' 6 1/2"	1.138	Passed (L/336)	--	1.0 D + 1.0 Lr (All Spans)
Total Load Defl. (in)	1.511 @ 11' 6 1/2"	1.517	Passed (L/181)	--	1.0 D + 1.0 Lr (All Spans)

System : Roof
Member Type : Drop Beam
Building Use : Residential
Building Code : IBC 2018
Design Methodology : ASD
Member Pitch : 0/12

- Deflection criteria: LL (L/240) and TL (L/180).
- A 4.8% decrease in the moment capacity has been added to account for lateral stability.
- Critical positive moment adjusted by a volume factor of 1.00 that was calculated using length L = 22' 9".
- The effects of positive or negative camber have not been accounted for when calculating deflection.
- The specified glulam is assumed to have its strong laminations at the bottom of the beam. Install with proper side up as indicated by the manufacturer.
- Applicable calculations are based on NDS.

Supports	Bearing Length			Loads to Supports (lbs)			Accessories
	Total	Available	Required	Dead	Roof Live	Factored	
1 - Stud wall - SPF	3.50"	3.50"	1.50"	1190	1385	2575	Blocking
2 - Stud wall - SPF	3.50"	3.50"	1.50"	1190	1385	2575	Blocking

- Blocking Panels are assumed to carry no loads applied directly above them and the full load is applied to the member being designed.

Lateral Bracing	Bracing Intervals	Comments
Top Edge (Lu)	End Bearing Points	
Bottom Edge (Lu)	End Bearing Points	

Vertical Loads	Location (Side)	Tributary Width	Dead (0.90)	Roof Live (non-snow: 1.25)	Comments
0 - Self Weight (PLF)	0 to 23' 1"	N/A	13.1	--	
1 - Uniform (PSF)	0 to 23' 1" (Front)	6'	15.0	20.0	Default Load

Weyerhaeuser Notes

Weyerhaeuser warrants that the sizing of its products will be in accordance with Weyerhaeuser product design criteria and published design values. Weyerhaeuser expressly disclaims any other warranties related to the software. Use of this software is not intended to circumvent the need for a design professional as determined by the authority having jurisdiction. The designer of record, builder or framer is responsible to assure that this calculation is compatible with the overall project. Accessories (Rim Board, Blocking Panels and Squash Blocks) are not designed by this software. Products manufactured at Weyerhaeuser facilities are third-party certified to sustainable forestry standards. Weyerhaeuser Engineered Lumber Products have been evaluated by ICC-ES under evaluation reports ESR-1153 and ESR-1387 and/or tested in accordance with applicable ASTM standards. For current code evaluation reports, Weyerhaeuser product literature and installation details refer to www.weyerhaeuser.com/woodproducts/document-library.

The product application, input design loads, dimensions and support information have been provided by ForteWEB Software Operator

ForteWEB Software Operator	Job Notes
Sean Clark Otak (360) 906-9438 sean.clark@otak.com	

Weyerhaeuser

2/21/2023 6:01:17 PM UTC
ForteWEB v3.5, Engine: V8.2.3.63, Data: V8.1.3.6
File Name: Riverwalk

FORTEWEB

MEMBER REPORT

23 PASSED

Level, Roof: Pav-Drop
1 piece(s) 5 1/2" x 15" 24F-V4 DF Glulam

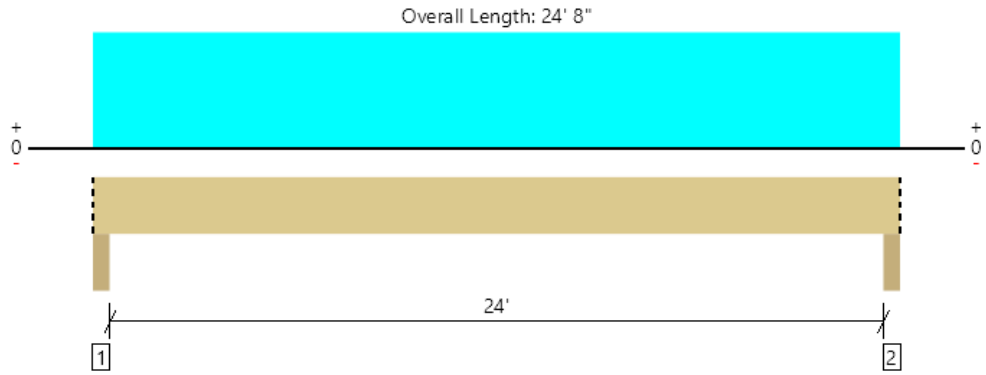

All locations are measured from the outside face of left support (or left cantilever end). All dimensions are horizontal.

Design Results	Actual @ Location	Allowed	Result	LDF	Load: Combination (Pattern)
Member Reaction (lbs)	3701 @ 2 1/2"	14300 (4.00")	Passed (26%)	--	1.0 D + 1.0 S (All Spans)
Shear (lbs)	3226 @ 1' 7"	16761	Passed (19%)	1.15	1.0 D + 1.0 S (All Spans)
Pos Moment (Ft-lbs)	22056 @ 12' 4"	44150	Passed (50%)	1.15	1.0 D + 1.0 S (All Spans)
Live Load Defl. (in)	0.489 @ 12' 4"	1.212	Passed (L/595)	--	1.0 D + 1.0 S (All Spans)
Total Load Defl. (in)	0.838 @ 12' 4"	1.617	Passed (L/347)	--	1.0 D + 1.0 S (All Spans)

System : Roof
Member Type : Drop Beam
Building Use : Residential
Building Code : IBC 2018
Design Methodology : ASD
Member Pitch : 0/12

- Deflection criteria: LL (L/240) and TL (L/180).
- A 6.9% decrease in the moment capacity has been added to account for lateral stability.
- Critical positive moment adjusted by a volume factor of 0.96 that was calculated using length L = 24' 3".
- The effects of positive or negative camber have not been accounted for when calculating deflection.
- The specified glulam is assumed to have its strong laminations at the bottom of the beam. Install with proper side up as indicated by the manufacturer.
- Applicable calculations are based on NDS.

Supports	Bearing Length			Loads to Supports (lbs)			Accessories
	Total	Available	Required	Dead	Snow	Factored	
1 - Column - SPF	4.00"	4.00"	1.50"	1542	2158	3701	Blocking
2 - Column - SPF	4.00"	4.00"	1.50"	1542	2158	3701	Blocking

- Blocking Panels are assumed to carry no loads applied directly above them and the full load is applied to the member being designed.

Lateral Bracing	Bracing Intervals	Comments
Top Edge (Lu)	End Bearing Points	
Bottom Edge (Lu)	End Bearing Points	

Vertical Loads	Location (Side)	Tributary Width	Dead (0.90)	Snow (1.15)	Comments
0 - Self Weight (PLF)	0 to 24' 8"	N/A	20.0	--	
1 - Uniform (PLF)	0 to 24' 8" (Front)	N/A	105.0	175.0	Default Load

Weyerhaeuser Notes

Weyerhaeuser warrants that the sizing of its products will be in accordance with Weyerhaeuser product design criteria and published design values. Weyerhaeuser expressly disclaims any other warranties related to the software. Use of this software is not intended to circumvent the need for a design professional as determined by the authority having jurisdiction. The designer of record, builder or framer is responsible to assure that this calculation is compatible with the overall project. Accessories (Rim Board, Blocking Panels and Squash Blocks) are not designed by this software. Products manufactured at Weyerhaeuser facilities are third-party certified to sustainable forestry standards. Weyerhaeuser Engineered Lumber Products have been evaluated by ICC-ES under evaluation reports ESR-1153 and ESR-1387 and/or tested in accordance with applicable ASTM standards. For current code evaluation reports, Weyerhaeuser product literature and installation details refer to www.weyerhaeuser.com/woodproducts/document-library.

The product application, input design loads, dimensions and support information have been provided by ForteWEB Software Operator

ForteWEB Software Operator	Job Notes
Sean Clark Otak (360) 906-9438 sean.clark@otak.com	

Weyerhaeuser

2/21/2023 5:59:40 PM UTC
ForteWEB v3.5, Engine: V8.2.3.63, Data: V8.1.3.6
File Name: Riverwalk

Guardrail Connection

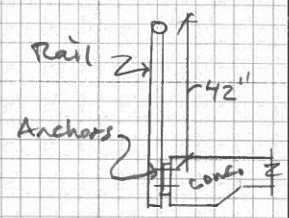

Section

Typical vert spacing = 6'-0" o.c.

$P_{ASD} = 50plf(6') = 300^{\#}$

Top of rail is 42" above walking surface

Distance to anchor centroid = 12"/2 + 42" = 4.0'

$M_{ASD} = 300^{\#}(4') = 14.4\ k\cdot in$

$M_u = 1.6(14.4\ k\cdot in) = 23.0\ k\cdot in = 1{,}920\ lb\cdot ft$

Used Anchor Designer: All ✓'s OK

use: (4) 1/2" ø Titen HD concrete screws w/ 3 1/4" Nominal Embedment depth

Size back plate: Check 9" square w/ 6" anchor spacing

$P_u = \frac{23.0\ k\cdot in}{6"} = 3.83\ kip$

$M_u = \frac{3.83k(6")}{4} = 5.75\ k\cdot in$

$t_{PL} = \left(\frac{4(5.75\ k\cdot in)}{0.9(36\ ksi)(9"/2)}\right)^{1/2} = 0.397" < 1/2"$ ✓OK

Check weld:

$S_{weld} = (6")^2/3 = 12.0\ in^3/in$

$f_b = \frac{23.0\ k\cdot in}{12.0\ in^2} = 1.92\ k/in$

# of Req'd 16th's $= \frac{1.92\ k/in}{1.392\ k/in} = 1.38 < 3.0$ ✓OK

use: PL 1/2 x 9 x 0'-9" A36 w/ 3/16" Fillet welds, each side of vert, 6" long

If Symmetric
- See next sheet for eccentric/off set connection (For prying action

project St. Helens - Riverwalk job# 20028 date June 2022 by SC

checked by _____ page _____ of _____

Otak

Guardrail Connection

Max vert spacing = 6'-0"

$M_u = 1{,}920$ lb·ft $= 23.0$ k·in

$V_u = 480^{\#}$

used Anchor Designer: All ✓'s OK

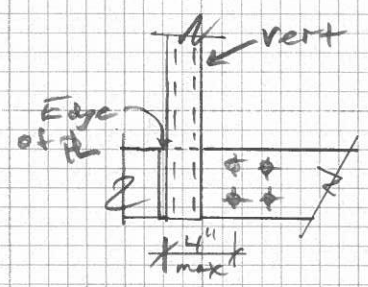

Elevation View

use: (4) 1/2" ϕ Titen HD concrete screws w/ 4" nominal embedment depth

Check back plate:

$M_{u\,max} = 2.307k(4" - 1"/2) = 8.07$ k·in

$t_{PL} = \left(\frac{4(8.07k\cdot in)}{0.9(36ksi)(12"/2)}\right)^{1/2} = 0.499" < 1/2"$ ✓OK

use: PL 1/2 x 12 x continuous A36 (1" thick plate called out)

Check vert:

Smallest vert = PL 1" x 4"

$\frac{L_b d}{t^2} = \frac{48"(4")}{(1")^2} = 192$

$M_y = 1/6(1")(4")^2(36ksi) = 96$ k·in

$\phi M_n = 0.9\left[1.52 - 0.274(192)\left(\frac{36}{29{,}000}\right)\right](96k\cdot in) = 125.7$ k·in

$\Rightarrow$ 125.7 k·in > 23 k·in ✓OK

HSS 2x2x1/8, $Z_x = 0.584 in^3$

$\phi M_n = 0.9(46ksi)(0.584in^3) = 24.2$ k·in > 23.0 k·in ✓OK

use: PL 1x4 A36 for verts (HSS 2x2x1/8 called out)

Check weld: $S_w = (10")^2/3 = 33.3 in^3/in$

$f_b = \frac{23.0k\cdot in}{33.3in^2} = 0.69k/in$

# of 16ths $= \frac{0.69k/in}{1.392k/in} = 0.496 < 3.0$ ✓OK

use: 3/16" welds, each side, full height (10" vertical welds, 1/4" called out

project St. Helens - Riverwalk job# 20028 date Oct. 2022 by [illegible]

checked by _____ page _____ of _____

Otak

SIMPSON Strong-Tie®

Anchor Designer™ Software
Version 3.0.7947.0

Company:		Date:	6/15/2022
Engineer:		Page:	1/5
Project:			
Address:			
Phone:			
E-mail:			

1.Project information

Customer company:
Customer contact name:
Customer e-mail:
Comment:

Project description:
Location:
Fastening description:

2. Input Data & Anchor Parameters

General
Design method:ACI 318-14
Units: Imperial units

Anchor Information:
Anchor type: Concrete screw
Material: Carbon Steel
Diameter (inch): 0.500
Nominal Embedment depth (inch): 4.000
Effective Embedment depth, h_{ef} (inch): 2.990
Code report: ICC-ES ESR-2713
Anchor category: 1
Anchor ductility: No
h_{min} (inch): 6.25
c_{ac} (inch): 4.50
C_{min} (inch): 1.75
S_{min} (inch): 3.00

Recommended Anchor
Anchor Name: Titen HD® - 1/2"Ø Titen HD, hnom:4" (102mm)
Code Report: ICC-ES ESR-2713

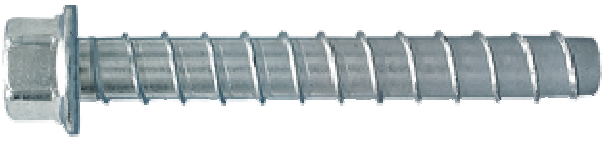

Base Material
Concrete: Normal-weight
Concrete thickness, h (inch): 12.00
State: Uncracked
Compressive strength, f'_c (psi): 3500
$\Psi_{c,V}$: 1.4
Reinforcement condition: B tension, B shear
Supplemental reinforcement: No
Reinforcement provided at corners: No
Ignore concrete breakout in tension: No
Ignore concrete breakout in shear: No
Ignore 6do requirement: Not applicable
Build-up grout pad: No

Base Plate
Length x Width x Thickness (inch): 9.50 x 8.75 x 0.25

SIMPSON Strong-Tie®

Anchor Designer™ Software
Version 3.0.7947.0

Company:		Date:	6/15/2022
Engineer:		Page:	2/5
Project:			
Address:			
Phone:			
E-mail:			

Load and Geometry
Load factor source: ACI 318 Section 5.3
Load combination: not set
Seismic design: No
Anchors subjected to sustained tension: Not applicable
Apply entire shear load at front row: No
Anchors only resisting wind and/or seismic loads: No

Strength level loads:

N_{ua} [lb]: 480
V_{uax} [lb]: 0
V_{uay} [lb]: 72
M_{ux} [ft-lb]: 1920
M_{uy} [ft-lb]: 0
M_{uz} [ft-lb]: 0

<Figure 1>

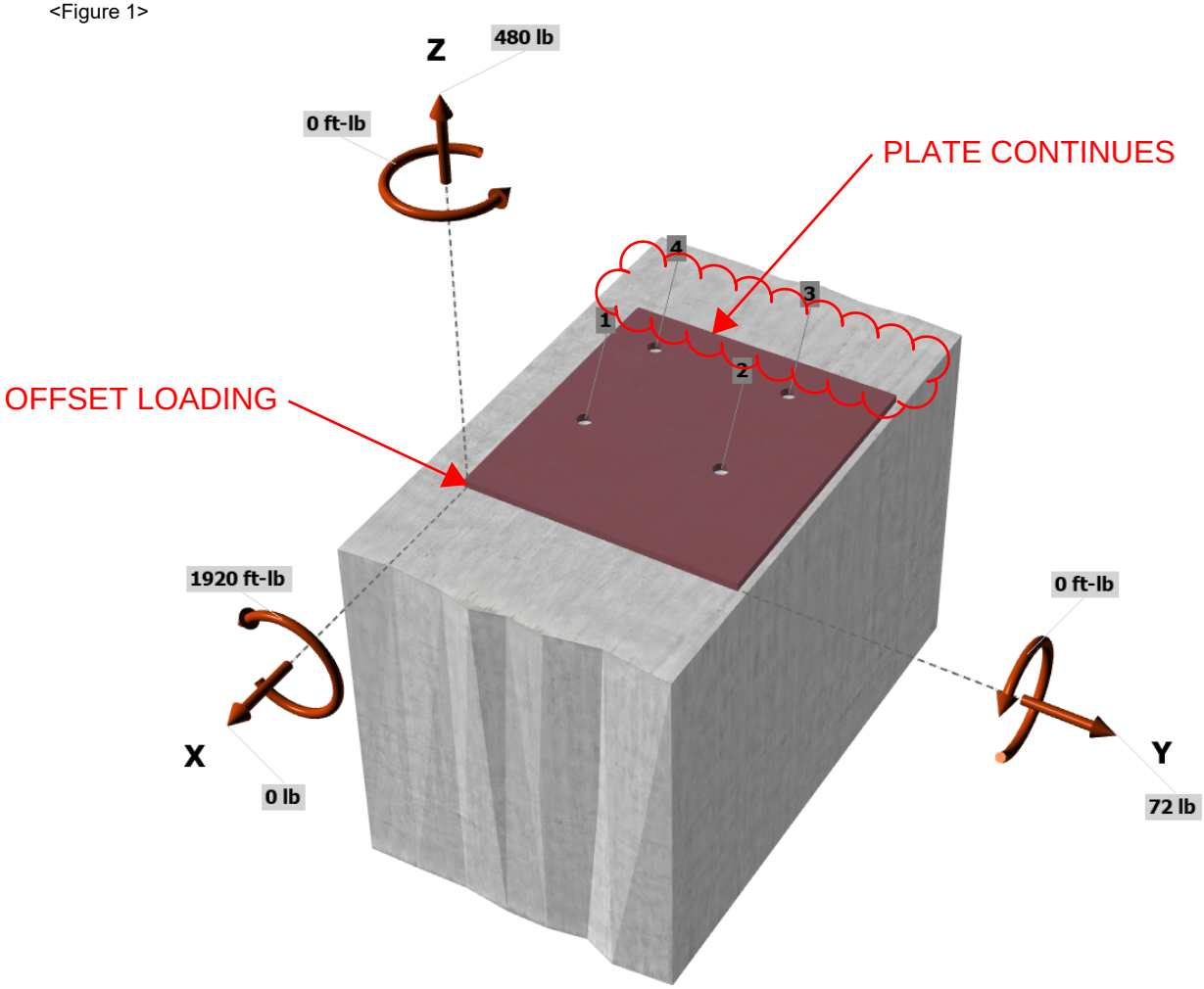

SIMPSON Strong-Tie®

Anchor Designer™ Software
Version 3.0.7947.0

Company:		Date:	6/15/2022
Engineer:		Page:	3/5
Project:			
Address:			
Phone:			
E-mail:			

<Figure 2>

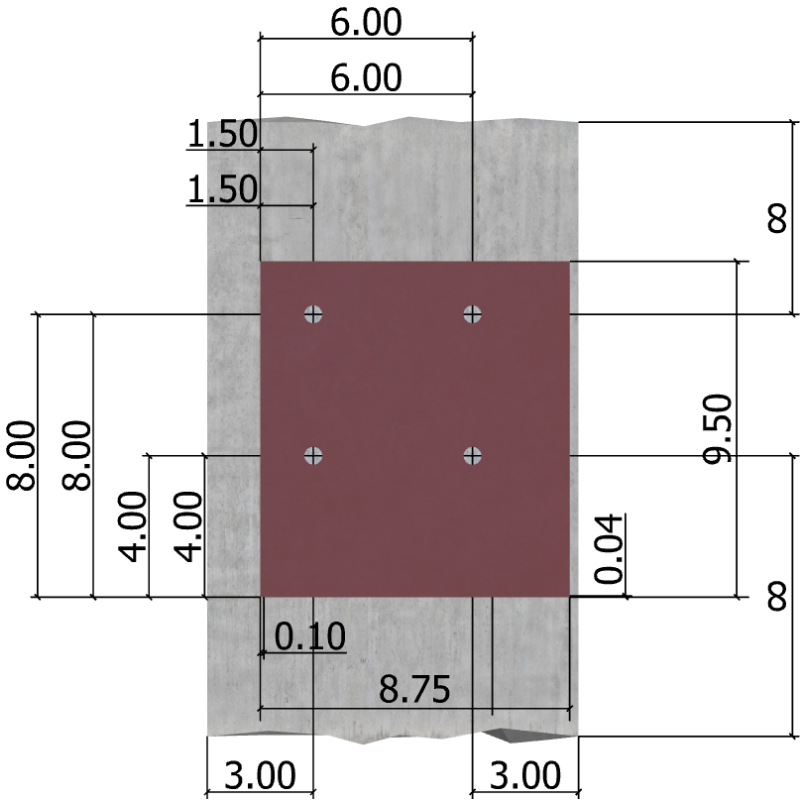

SIMPSON Strong-Tie®

Anchor Designer™ Software
Version 3.0.7947.0

Company:		Date:	6/15/2022
Engineer:		Page:	4/5
Project:			
Address:			
Phone:			
E-mail:			

3. Resulting Anchor Forces

Anchor	Tension load, N_{ua} (lb)	Shear load x, V_{uax} (lb)	Shear load y, V_{uay} (lb)	Shear load combined, $\sqrt{(V_{uax})^2+(V_{uay})^2}$ (lb)
1	73.5	26.6	41.7	49.5
2	2306.6	-26.6	41.7	49.5
3	1913.4	-26.6	-5.7	27.2
4	0.0	26.6	-5.7	27.2
Sum	4293.5	0.0	72.0	153.4

Maximum concrete compression strain (‰): 0.18
Maximum concrete compression stress (psi): 770
Resultant tension force (lb): 4294
Resultant compression force (lb): 3814
Eccentricity of resultant tension forces in x-axis, e'_{Nx} (inch): 1.42
Eccentricity of resultant tension forces in y-axis, e'_{Ny} (inch): 0.45
Eccentricity of resultant shear forces in x-axis, e'_{Vx} (inch): 0.00
Eccentricity of resultant shear forces in y-axis, e'_{Vy} (inch): 0.00

<Figure 3>

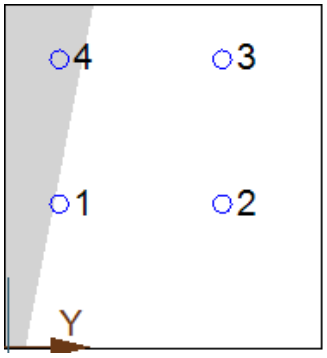

4. Steel Strength of Anchor in Tension (Sec. 17.4.1)

N_{sa} (lb)	ϕ	ϕN_{sa} (lb)
20130	0.65	13085

5. Concrete Breakout Strength of Anchor in Tension (Sec. 17.4.2)

$N_b = k_c \lambda_a \sqrt{f'_c} h_{ef}^{1.5}$ (Eq. 17.4.2.2a)

k_c	λ_a	f'_c (psi)	h_{ef} (in)	N_b (lb)
24.0	1.00	3500	2.990	7341

$\phi N_{cbg} = \phi\,(A_{Nc} / A_{Nco})\,\Psi_{ec,N}\,\Psi_{ed,N}\,\Psi_{c,N}\,\Psi_{cp,N} N_b$ (Sec. 17.3.1 & Eq. 17.4.2.1b)

A_{Nc} (in²)	A_{Nco} (in²)	$c_{a,min}$ (in)	$\Psi_{ec,N}$	$\Psi_{ed,N}$	$\Psi_{c,N}$	$\Psi_{cp,N}$	N_b (lb)	ϕ	ϕN_{cbg} (lb)
124.13	80.46	3.00	0.690	0.901	1.00	0.997	7341	0.65	4560

8. Steel Strength of Anchor in Shear (Sec. 17.5.1)

V_{sa} (lb)	ϕ_{grout}	ϕ	$\phi_{grout}\phi V_{sa}$ (lb)
7455	1.0	0.60	4473

9. Concrete Breakout Strength of Anchor in Shear (Sec. 17.5.2)

Shear perpendicular to edge in y-direction:

$V_{by} = \min|7(l_e / d_a)^{0.2} \sqrt{d_a} \lambda_a \sqrt{f'_c} c_{a1}^{1.5};\ 9\lambda_a \sqrt{f'_c} c_{a1}^{1.5}|$ (Eq. 17.5.2.2a & Eq. 17.5.2.2b)

l_e (in)	d_a (in)	λ_a	f'_c (psi)	c_{a1} (in)	V_{by} (lb)
2.99	0.500	1.00	3500	3.00	2176

$\phi V_{cbgy} = \phi\,(A_{Vc} / A_{Vco})\,\Psi_{ec,V}\,\Psi_{ed,V}\,\Psi_{c,V}\,\Psi_{h,V} V_{by}$ (Sec. 17.3.1 & Eq. 17.5.2.1b)

A_{Vc} (in²)	A_{Vco} (in²)	$\Psi_{ec,V}$	$\Psi_{ed,V}$	$\Psi_{c,V}$	$\Psi_{h,V}$	V_{by} (lb)	ϕ	ϕV_{cbgy} (lb)
40.50	40.50	1.000	1.000	1.400	1.000	2176	0.70	2132

SIMPSON Strong-Tie®

Anchor Designer™ Software
Version 3.0.7947.0

Company:		Date:	6/15/2022
Engineer:		Page:	5/5
Project:			
Address:			
Phone:			
E-mail:			

Shear parallel to edge in y-direction:

$V_{bx} = \min|7(l_e / d_a)^{0.2}\sqrt{d_a}\lambda_a\sqrt{f'_c}c_{a1}^{1.5};\ 9\lambda_a\sqrt{f'_c}c_{a1}^{1.5}|$ (Eq. 17.5.2.2a & Eq. 17.5.2.2b)

l_e (in)	d_a (in)	λ_a	f'_c (psi)	c_{a1} (in)	V_{bx} (lb)
2.99	0.500	1.00	3500	3.00	2176

$\phi V_{cbgy} = \phi\ (2)(A_{Vc} / A_{Vco})\Psi_{ec,V}\Psi_{ed,V}\Psi_{c,V}\Psi_{h,V}V_{bx}$ (Sec. 17.3.1, 17.5.2.1(c) & Eq. 17.5.2.1b)

A_{Vc} (in^2)	A_{Vco} (in^2)	$\Psi_{ec,V}$	$\Psi_{ed,V}$	$\Psi_{c,V}$	$\Psi_{h,V}$	V_{bx} (lb)	ϕ	ϕV_{cbgy} (lb)
58.50	40.50	1.000	1.000	1.400	1.000	2176	0.70	6160

10. Concrete Pryout Strength of Anchor in Shear (Sec. 17.5.3)

$\phi V_{cp} = \phi k_{cp}N_{cb} = \phi k_{cp}(A_{Nc} / A_{Nco})\Psi_{ed,N}\Psi_{c,N}\Psi_{cp,N}N_b$ (Sec. 17.3.1 & Eq. 17.5.3.1a)

k_{cp}	A_{Nc} (in^2)	A_{Nco} (in^2)	$\Psi_{ed,N}$	$\Psi_{c,N}$	$\Psi_{cp,N}$	N_b (lb)	ϕ	ϕV_{cp} (lb)
2.0	34.05	80.46	0.901	1.000	0.997	7341	0.70	3904

11. Results

Interaction of Tensile and Shear Forces (Sec. 17.6.)

Tension	Factored Load, N_{ua} (lb)	Design Strength, ϕN_n (lb)	Ratio	Status
Steel	2307	13085	0.18	Pass
Concrete breakout	**4294**	**4560**	**0.94**	**Pass (Governs)**

Shear	Factored Load, V_{ua} (lb)	Design Strength, ϕV_n (lb)	Ratio	Status
Steel	49	4473	0.01	Pass
T Concrete breakout y+	**42**	**2132**	**0.02**	**Pass (Governs)**
|| Concrete breakout y+	**53**	**6160**	**0.01**	**Pass (Governs)**
Pryout	49	3904	0.01	Pass

Interaction check	$N_{ua}/\phi N_n$	$V_{ua}/\phi V_n$	Combined Ratio	Permissible	Status
Sec. 17.6..1	0.94	0.00	94.2%	1.0	Pass

1/2"Ø Titen HD, hnom:4" (102mm) meets the selected design criteria.

12. Warnings

- Designer must exercise own judgement to determine if this design is suitable.

- Refer to manufacturer's product literature for hole cleaning and installation instructions.

Guardrail - Pickets

(2) Types of guardrail infill (Pickets):

1" x 3/4"

1/2" x 1/4" ← Controls by Inspection

Pickets @ 4" o.c. max : $P = 50^{\#} / 3\text{-pickets} = 16.7^{\#}$

Height of picket = 40" max

$M_{ASD} = \frac{16.7^{\#}(40")}{4} = 0.167$ k·in

$\frac{L_b d}{t^2} = \frac{40"(1/2")}{(1/4")^2} = 320$

$M_y = 1/6\,(1/4")(1/2")^2(36\text{ksi}) = 0.375$ k·in

$M_n/\Omega = [1.52 - 0.274(320)(\frac{36}{29{,}000})](0.375\text{ k·in})(\frac{1}{1.67})$

$\Rightarrow M_n/\Omega = \underline{0.317\text{ k·in} > 0.167\text{ k·in}}$ ✓OK

Use: | Guardrail Infill/pickets: Min. PL 1/4 x 1/2 x 3'-4" A36 (PL 1 x 4 x 3'-4" A36 also adequate) |

Check bottom rail: Span = 6'/2 = 3.0'

$P_{ASD} = 300^{\#}$

$M_{ASD} = \frac{300^{\#}(3')}{4} = 2.70$ k·in

$t_{PL} = \left(\frac{4(2.70\text{ k·in})}{0.6(36\text{ksi})(4")}\right)^{1/2} = \underline{0.354" < 1.0"}$ ✓OK

Use: | PL 1 x 4 x Cont. A36 Support w/ stiffener @ every 3'-0", min. |

project St. Helens-Riverwalk job# 20028 date Oct. 2022 by BL

checked by _____ page _____ of _____

Otak

Outriggers at Shed

Try Spacing @ 32" o.c.

$\omega_{ASD} = (18psf + 25psf)(2.67') = 115plf$

$M_{ASD} = \frac{115plf(1.5')^2}{2} = 1.55 k\cdot in$

$f_b = \frac{6(1.55 k\cdot in)}{3.5"(1\frac{1}{2}")^2} = 1,183psi$

$F'_b = \overset{C_D}{1.15}(\overset{C_F}{1.5})(\overset{C_{fu}}{1.10})(900psi) = 1,707psi$

$\Rightarrow$ 1,707psi > 1,183psi ✓OK

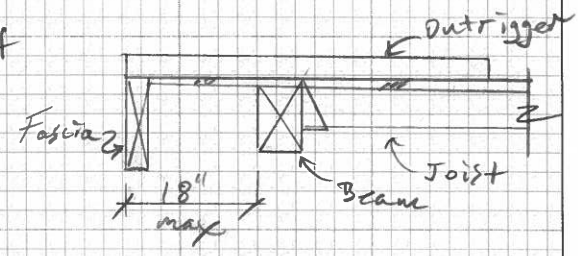

Sketch

Check deflection: $I_{y-y} = \frac{1}{12}(3\frac{1}{2}")(1\frac{1}{2}")^3 = 0.984 in^4$

$\Delta = \frac{115plf(1.5')^4(1,728 in/ft)}{8(1.6\times10^6psi)(0.984 in^2)} = 0.080"$

$\Rightarrow \frac{18"}{0.080"} = L/225 < L/120$ ✓OK

Use: 2x4 DF No. 2 @ 32" o.c., Flatwise

project St. Helens - Riverwalk job# 20028 date Feb. 2023 by SC

checked by _____ page _____ of _____

Otak

MSE WALL DESIGN WORKBOOK

Designer: Sean Clark
Date: 2/21/2022
Firm: Otak

Project Name: St Helens - Riverwalk
Project No: 20028

Comments:

Design gabion retaining wall with cantilevered overlook. This workbook: 14.5' wall with surcharges for future wall and fill. [Wall calculations based on gabion faced MSE wall. Gabions are 36" tall x 36" wide x 6' long. Wall reinforced with Miragrid 7xt/10xt reinforcement at 1.5' spacing per geotechnical report from NV5. Fill to be gravel backfill according to Geotech report.]

MSE Wall Design - Design Inputs and Constants

Resistance Factors

ϕ(bearing)	0.65	Table 11.5.7-1
ϕt(sliding)	1	Table 11.5.7-1
ϕep(sliding)	1	Table 11.5.7-1
ϕpo	0.9	Table 11.5.7-1
ϕt,g	0.9	Table 11.5.7-1

Soil Properties

ϕf	32	degrees	(Internal friction angle of foundation soil)
ϕr	36	degrees	(Internal friction angle of reinforced soil)
ϕr	36	degrees	(Internal friction angle of retained soil)
γs,f	110	pcf	(Weight of gabion fill)
γs,r	120	pcf	(Weight of reinforced fill)
γs,r	120	pcf	(Weight of retained fill)

Facing Properties

B	3	feet	(width of one gabion basket)
H_1	1.5	feet	(height of one gabion basket)
L_1	12	feet	(length of one gabion basket, along wall)
Batter:		degrees	(enter batter in degrees or in slope, batter in degrees
	0.083333	slope	calculated below)
Batter:	4.76	degrees	
H2	0	feet	(minimum embed of wall toe)

Geogrid 1 Properties

L	22.5	feet	(min. length of geogrid)
b	12	feet	(unit width of reinforcing, roll width)
Sv	1.5	feet	(geogrid vertical spacing)
Sh	12	feet	(geogrid horizontal spacing, Sh=b for continuous)
T_{ult} (MARV)	5900	lbs	(Ultimate Tensile Strength per manuf.)
RF_{CR}	1.45		(Strength reduction for creep, per WSDOT QPL App. D)
RF_{ID}	1.12		(Strength reduction for installation damage, WSDOT QPL App. D)
RF_D	1.3		(Strength reduction for degradation damage, WSDOT QPL App. D)
F*	0.487		(Pullout friction factor, Fig. 11.10.6.3.2-2)
α	0.8		(Scale Effect Corr. Factor, Table 11.10.6.3.2-1)
C	2		(Overall reinf. Surface area geometry factor, 2.0 for strip, grid, and sheet type)
Rc	1		(Reinforcement coverage ratio)
Ψ	63.00	degrees	(angle of boundry between active and resistance zones)

Geogrid 2 Properties

T_{ult} (MARV)	9500	lbs	(Ultimate Tensile Strength per manuf.)
RF_{CR}	1.45		(Strength reduction for creep, per WSDOT QPL App. D)
RF_{ID}	1.12		(Strength reduction for installation damage, WSDOT QPL App. D)
RF_D	1.3		(Strength reduction for degradation damage, WSDOT QPL App. D)

Laterial Earth Pressure Coefficients

δ	0	degrees	(Table 3.11.5.3-1)
β	0	degrees	(Slope of backfill from horizontal)
θ	94.76	degrees	(Angle of back of wall, 90 = vertical)
Γ	2.53		(coefficient, active earth pressure calc)
k_a	0.229		(active earth pressure coefficient)
k_0	0.412		(at-rest earth pressure coefficient)
k_p	3		(passive earth pressure coefficient, Sect. 3.11.5.4)
As	0	g	(site adjusted peak ground acceleration)
C1	0.5		(adjustment to kh to account for allowed displacement of the wall face under seismic loads)
k_h	0.000		

Other Loads

LS	100	psf	(Live load surcharge)
ES	0	psf	(Future Earth Fill surcharge)
DS	0	psf	(Future Gabion Wall surcharge)

Strength I Load Factors

$\gamma_{DC,max}$	1.25	(Dead Load Factor, maximum)
$\gamma_{DC,min}$	0.90	(Dead Load Factor, minimum)
$\gamma_{EV,max}$	1.35	(Vertical Earth Pressure Factor, minimum)
$\gamma_{EV,min}$	1.00	(Vertical Earth Pressure Factor, minimum)
$\gamma_{EH,max}$	1.50	(Horizontal Earth Pressure Factor)
$\gamma_{EH,min}$	0.90	(Horizontal Earth Pressure Factor)
γ_{LL}	1.75	(Live Load Factor)
$\gamma_{ES,\ max}$	1.50	(Earth Surcharge Load Factor, maximum)
$\gamma_{ES,\ min}$	0.75	(Earth Surcharge Load Factor, minimum)

Service I Load Factors

γ_{DC}	1.00	(Dead Load Factor, maximum)
γ_{EV}	1.00	(Vertical Earth Pressure Factor, minimum)
γ_{EH}	1.00	(Horizontal Earth Pressure Factor)
γ_{LL}	1.00	(Live Load Factor)

Extreme Event I Load Factors

γ_{DC}	0.90	(Dead Load Factor, maximum)
γ_{EV}	1.00	(Vertical Earth Pressure Factor, minimum)
γ_{EH}	1.50	(Horizontal Earth Pressure Factor)
γ_{LL}	1.00	(Live Load Factor)
γ_{EQ}	1.00	(Earthquake Load Factor)

Capacity

qult	3077	psf	(ultimate bearing pressure)
qall	2000	psf	(allowable bearing pressure)
δ	0.40		(coefficient of sliding friction)

MSE Wall Design - Wall Heights and Reinforcement Layers

Gabion No.	H	No. layers re'q	DC Facing (k)	EV_{RZ} (k)	EV_{SB} (k)	Pi (k/FOW)	T_{md} (k/layer/FOW)
1	3	2	0.495	8.1	0.00	0.00	0.000
2	6	4	0.99	16.2	0.00	0.00	0.000
3	9	6	1.485	24.3	0.00	0.00	0.000
4	12	8	1.98	32.4	0.00	0.00	0.000
5	15	10	2.475	40.5	0.00	0.00	0.000

									Rupture			Pullout					
Layer No.	Z (ft)	h (ft)	P_{EH} (k/FOW)	$P_{LS,h}$ (k/FOW)	$q_{LS,V}$ (ksf)	$q_{ES,V}$ (ksf)	$P_{DS,h}$ (k/FOW)	$q_{DS,V}$ (ksf)	$\sigma_{v,max}$ (ksf)	$\sigma_{h,max}$ (ksf)	T_{max} (k)	La (ft)	Le (ft)	Zp (ft)	$\sigma_{v,po}$ (ksf)	$\sigma_{h,po}$ (ksf)	T_{po} (k)
0	0.00	0.00	0.00	0.00	0.10	0.00	0.00	0.00	0.100	0.031	0.046	7.64	14.86	0.00	0.000	0.000	0.000
1	1.50	1.50	0.42	0.03	0.10	0.00	0.00	0.00	0.280	0.087	0.130	6.88	15.62	1.50	0.180	0.056	0.084
2	3.00	3.00	0.91	0.07	0.10	0.00	0.00	0.00	0.460	0.142	0.214	6.11	16.39	3.00	0.360	0.111	0.167
3	4.50	4.50	1.46	0.10	0.10	0.00	0.00	0.00	0.640	0.198	0.297	5.35	17.15	4.50	0.540	0.167	0.251
4	6.00	6.00	2.06	0.14	0.10	0.00	0.00	0.00	0.820	0.254	0.381	4.59	17.91	6.00	0.720	0.223	0.334
5	7.50	7.50	2.73	0.17	0.10	0.00	0.00	0.00	1.000	0.310	0.464	3.82	18.68	7.50	0.900	0.279	0.418
6	9.00	9.00	3.47	0.21	0.10	0.00	0.00	0.00	1.180	0.365	0.548	3.06	19.44	9.00	1.080	0.334	0.502
7	10.50	10.50	4.26	0.24	0.10	0.00	0.00	0.00	1.360	0.421	0.632	2.29	20.21	10.50	1.260	0.390	0.585
8	12.00	12.00	5.12	0.28	0.10	0.00	0.00	0.00	1.540	0.477	0.715	1.53	20.97	12.00	1.440	0.446	0.669
9	13.50	13.50	6.04	0.31	0.10	0.00	0.00	0.00	1.720	0.533	0.799	0.76	21.74	13.50	1.620	0.502	0.752
10	15.00	15.00	7.02	0.34	0.10	0.00	0.00	0.00	1.900	0.588	0.882	0.00	22.50	15.00	1.800	0.557	0.836

*Calc for PEH includes height of final fill above back of reinforced zone

H Height of wall facing
DC Facing Dead Load of wall facing
EV_{RZ} (k) Vertical earth pressure from reinforced zone
EV_{SB} (k) Vertical earth pressure from sloped backfill
Z Depth of reinforcing layer from top of wall
h Depth of reinfocing layer from ground surface at back of reinforced soil zone
P_{EH} Total horizontal earth force @ Z
P_{LS} Horizontal Force due to live load surcharge
$P_{LS,V}$ Vertical Force due to live load surcharge
$\sigma_{v,max}$ Maximum vertical stress in reinforcing layer
$\sigma_{h,max}$ Maximum factored horizontal stress in reinforcing layer
T_{max} Maximum factored load in reinforcement
La Length of active zone
Le Length of resistance zone
Zp Depth of reinforcing layer from ground surface at beginning of resistance zone
$\sigma_{v,po}$ Vertical stress in reinforcing layer for pullout calculation
$\sigma_{h,po}$ Factored horizontal stress in reinforcing layer for pullout calculation
T_{po} Factored load in reinforcement for pullout
Pi Horizontal force due to seismic load on the active zone
T_{md} Additional force at each layer due to seismic load

MSE Wall Design - Reinforcement

Design Reinforcement layers at each layer, max wall height

ϕTnr_1	2.515	k	Capacity of first type geogrid
ϕTnr_2	4.050	k	Capacity of second type geogrid

			STR1					
Layer No.	Z (ft)	h (ft)	T_{max} (k)	T_{po} (k)	Le (ft)	Check Rupture	Le_{min} (ft)	Check Pullout
0	0.00	0.00	0.05	0.00	14.86	OK, G1	#DIV/0!	#DIV/0!
1	1.50	1.50	0.13	0.08	15.62	OK, G1	0.66	OK
2	3.00	3.00	0.21	0.17	16.39	OK, G1	0.66	OK
3	4.50	4.50	0.30	0.25	17.15	OK, G1	0.66	OK
4	6.00	6.00	0.38	0.33	17.91	OK, G1	0.66	OK
5	7.50	7.50	0.46	0.42	18.68	OK, G1	0.66	OK
6	9.00	9.00	0.55	0.50	19.44	OK, G1	0.66	OK
7	10.50	10.50	0.63	0.59	20.21	OK, G1	0.66	OK
8	12.00	12.00	0.72	0.67	20.97	OK, G1	0.66	OK
9	13.50	13.50	0.80	0.75	21.74	OK, G1	0.66	OK
10	15.00	15.00	0.88	0.84	22.50	OK, G1	0.66	OK

MSE Wall Design - Reinforcement

Design Reinforcement layers at each layer, max wall height

ϕTnr_1	2.515	k	Capacity of first type geogrid
ϕTnr_2	4.050	k	Capacity of second type geogrid

		EE1								
Layer No.	Z (ft)	T_{md} (k)	$\sigma_{h,\ max}$ (ksf)	T_{max+md} (k)	Check Rupture	$\sigma_{h,\ po}$ (ksf)	T_{po+md} (k)	Le, min (ft)	Check Pullout	Geogrid Type
0	0.00	0.000	0.023	0.034	OK, G1	0.000	0.000	#DIV/0!	#DIV/0!	G1
1	1.50	0.000	0.064	0.096	OK, G1	0.133	0.200	1.585	OK	G1
2	3.00	0.000	0.105	0.158	OK, G1	0.267	0.400	1.585	OK	G1
3	4.50	0.000	0.147	0.220	OK, G1	0.400	0.600	1.585	OK	G1
4	6.00	0.000	0.188	0.282	OK, G1	0.533	0.800	1.585	OK	G1
5	7.50	0.000	0.229	0.344	OK, G1	0.667	1.000	1.585	OK	G1
6	9.00	0.000	0.271	0.406	OK, G1	0.800	1.200	1.585	OK	G1
7	10.50	0.000	0.312	0.468	OK, G1	0.933	1.400	1.585	OK	G1
8	12.00	0.000	0.353	0.530	OK, G1	1.067	1.600	1.585	OK	G1
9	13.50	0.000	0.394	0.592	OK, G1	1.200	1.800	1.585	OK	G1
10	15.00	0.000	0.436	0.654	OK, G1	1.333	2.000	1.585	OK	G1

MSE Wall Design - Sliding and Eccentricity

Check sliding and eccentricity at each wall height

Sliding, No Facing *Sliding, No Facing*

H (ft)	DC Facing (k)	EV_{RZ} (k)	EV_{SB} (k)	$P_{EH,h}$ (k/FOW)	$P_{EH,v}$ (k/FOW)	$P_{LS,h}$ (k/FOW)	$P_{ES,V}$ (k/FOW)	$P_{DS,V}$ (k/FOW)	V (no facing) (k)	ϕR_t	ϕR_{ep}	ϕR_{total}	Vu (k)	Sliding Check
3	NA	8.1	0.00	0.91	0.00	0.07	0.00	NA	8.10	3.24	0.18	3.42	1.48	OK
6	NA	16.2	0.00	2.06	0.00	0.14	0.00	NA	16.20	6.48	0.18	6.66	3.34	OK
9	NA	24.3	0.00	3.47	0.00	0.21	0.00	NA	24.30	9.72	0.18	9.90	5.56	OK
12	NA	32.4	0.00	5.12	0.00	0.28	0.00	NA	32.40	12.96	0.18	13.14	8.16	OK
15	NA	40.5	0.00	7.02	0.00	0.34	0.00	NA	40.50	16.20	0.18	16.38	11.13	OK

Sliding, with Facing *Sliding, with Facing*

H (ft)	DC Facing (k)	EV_{RZ} (k)	EV_{SB} (k)	$P_{EH,h}$ (k/FOW)	$P_{EH,v}$ (k/FOW)	$P_{LS,h}$ (k/FOW)	$P_{ES,V}$ (k/FOW)	$P_{DS,V}$ (k/FOW)	V (w/ facing) (k)	ϕR_t	ϕR_{ep}	ϕR_{total}	Vu (k)	Sliding Check
3	0.495	8.1	0.00	0.91	0.00	0.07	0.00	0.00	8.72	3.49	0.18	3.67	1.48	OK
6	0.99	16.2	0.00	2.06	0.00	0.14	0.00	0.00	17.44	6.98	0.18	7.16	3.34	OK
9	1.485	24.3	0.00	3.47	0.00	0.21	0.00	0.00	26.16	10.46	0.18	10.64	5.56	OK
12	1.98	32.4	0.00	5.12	0.00	0.28	0.00	0.00	34.88	13.95	0.18	14.13	8.16	OK
15	2.475	40.5	0.00	7.02	0.00	0.34	0.00	0.00	43.59	17.44	0.18	17.62	11.13	OK

Eccentricity, No Facing *Eccentricity, No Facing*

H (ft)	DC Facing (k)	EV_{RZ} (k)	EV_{SB} (k)	$P_{EH,h}$ (k/FOW)	$P_{EH,v}$ (k/FOW)	$P_{LS,h}$ (k/FOW)	$P_{ES,V}$ (k/FOW)	$P_{DS,V}$ (k/FOW)	$X_{(DC)}$ (ft)	$X_{(EVRZ)}$ (ft)	$X_{(EVSB)}$ (ft)	$X_{(PEHh)}$ (ft)	$X_{(PEHV)}$ (ft)	$X_{(PLSh)}$ (ft)	$X_{(PESv)}$ (ft)	∑V (no facing) (k)	∑Mc (no facing) (kft)	e (no facing) (ft)	Check
3	NA	8.1	0.00	0.91	0.00	0.07	0.00	NA	NA	0	3.75	1.43	11.25	1.50	0.00	8.10	2.13	0.26	OK
6	NA	16.2	0.00	2.06	0.00	0.14	0.00	NA	NA	0	3.75	2.76	11.25	3.00	0.00	16.20	9.27	0.57	OK
9	NA	24.3	0.00	3.47	0.00	0.21	0.00	NA	NA	0	3.75	4.02	11.25	4.50	0.00	24.30	22.52	0.93	OK
12	NA	32.4	0.00	5.12	0.00	0.28	0.00	NA	NA	0	3.75	5.23	11.25	6.00	0.00	32.40	43.01	1.33	OK
15	NA	40.5	0.00	7.02	0.00	0.34	0.00	NA	NA	0	3.75	6.40	11.25	7.50	0.00	40.50	71.85	1.77	OK

Eccentricity, with Facing *Eccentricity, with Facing*

H (ft)	DC Facing (k)	EV_{RZ} (k)	EV_{SB} (k)	$P_{EH,h}$ (k/FOW)	$P_{EH,v}$ (k/FOW)	$P_{LS,h}$ (k/FOW)	$P_{ES,V}$ (k/FOW)	$P_{DS,V}$ (k/FOW)	$X_{(DC)}$ (ft)	$X_{(EVRZ)}$ (ft)	$X_{(EVSB)}$ (ft)	$X_{(PEHh)}$ (ft)	$X_{(PEHV)}$ (ft)	$X_{(PLSh)}$ (ft)	$X_{(PESv)}$ (ft)	∑V (w/ facing) (k)	∑Mc (w/ facing) (kft)	e (w/ facing) (ft)	Check
3	0.495	8.1	0.00	0.91	0.00	0.07	0.00	0.00	11.25	1.5	5.25	1.43	11.25	1.50	1.50	8.72	-7.31	-0.84	OK
6	0.99	16.2	0.00	2.06	0.00	0.14	0.00	0.00	11.25	1.5	5.25	2.76	11.25	3.00	1.50	17.44	-9.62	-0.55	OK
9	1.485	24.3	0.00	3.47	0.00	0.21	0.00	0.00	11.25	1.5	5.25	4.02	11.25	4.50	1.50	26.16	-5.80	-0.22	OK
12	1.98	32.4	0.00	5.12	0.00	0.28	0.00	0.00	11.25	1.5	5.25	5.23	11.25	6.00	1.50	34.88	5.25	0.15	OK
15	2.475	40.5	0.00	7.02	0.00	0.34	0.00	0.00	11.25	1.5	5.25	6.40	11.25	7.50	1.50	43.59	24.65	0.57	OK

MSE Wall Design - Design Inputs and Constants

Resistance Factors

ϕ(bearing)	0.65	Table 11.5.7-1
ϕt(sliding)	1	Table 11.5.7-1
ϕep(sliding)	1	Table 11.5.7-1
ϕpo	0.9	Table 11.5.7-1
ϕt,g	0.9	Table 11.5.7-1

Soil Properties

ϕf	32	degrees	(Internal friction angle of foundation soil)
ϕr	36	degrees	(Internal friction angle of reinforced soil)
ϕr	36	degrees	(Internal friction angle of retained soil)
γs,f	110	pcf	(Weight of gabion fill)
γs,r	120	pcf	(Weight of reinforced fill)
γs,r	120	pcf	(Weight of retained fill)

Facing Properties

B	3	feet	(width of one gabion basket)
H_1	1.5	feet	(height of one gabion basket)
L_1	12	feet	(length of one gabion basket, along wall)
Batter:		degrees	(enter batter in degrees or in slope, batter in degrees
	0.083333	slope	calculated below)
Batter:	4.76	degrees	
H2	0	feet	(minimum embed of wall toe)

Geogrid 1 Properties

L	22.5	feet	(min. length of geogrid)
b	12	feet	(unit width of reinforcing, roll width)
Sv	1.5	feet	(geogrid vertical spacing)
Sh	12	feet	(geogrid horizontal spacing, Sh=b for continuous)
T_{ult} (MARV)	5900	lbs	(Ultimate Tensile Strength per manuf.)
RF_{CR}	1.45		(Strength reduction for creep, per WSDOT QPL App. D)
RF_{ID}	1.12		(Strength reduction for installation damage, WSDOT QPL App. D)
RF_D	1.3		(Strength reduction for degradation damage, WSDOT QPL App. D)
F*	0.487		(Pullout friction factor, Fig. 11.10.6.3.2-2)
α	0.8		(Scale Effect Corr. Factor, Table 11.10.6.3.2-1)
C	2		(Overall reinf. Surface area geometry factor, 2.0 for strip, grid, and sheet type)
Rc	1		(Reinforcement coverage ratio)
Ψ	63.00	degrees	(angle of boundry between active and resistance zones)

Geogrid 2 Properties

T_{ult} (MARV)	9500	lbs	(Ultimate Tensile Strength per manuf.)
RF_{CR}	1.45		(Strength reduction for creep, per WSDOT QPL App. D)
RF_{ID}	1.12		(Strength reduction for installation damage, WSDOT QPL App. D)
RF_D	1.3		(Strength reduction for degradation damage, WSDOT QPL App. D)

Laterial Earth Pressure Coefficients

δ	0	degrees	(Table 3.11.5.3-1)
β	0	degrees	(Slope of backfill from horizontal)
θ	94.76	degrees	(Angle of back of wall, 90 = vertical)
Γ	2.53		(coefficient, active earth pressure calc)
k_a	0.229		(active earth pressure coefficient)
k_0	0.412		(at-rest earth pressure coefficient)
k_p	3		(passive earth pressure coefficient, Sect. 3.11.5.4)
As	0.664	g	(site adjusted peak ground acceleration)
C1	0.5		(adjustment to kh to account for allowed displacement of the wall face under seismic loads)
k_h	0.332		

Other Loads

LS	100	psf	(Live load surcharge)
ES	0	psf	(Future Earth Fill surcharge)
DS	0	psf	(Future Gabion Wall surcharge)

Strength I Load Factors

$\gamma_{DC,max}$	1.25	(Dead Load Factor, maximum)
$\gamma_{DC,min}$	0.90	(Dead Load Factor, minimum)
$\gamma_{EV,max}$	1.35	(Vertical Earth Pressure Factor, minimum)
$\gamma_{EV,min}$	1.00	(Vertical Earth Pressure Factor, minimum)
$\gamma_{EH,max}$	1.50	(Horizontal Earth Pressure Factor)
$\gamma_{EH,min}$	0.90	(Horizontal Earth Pressure Factor)
γ_{LL}	1.75	(Live Load Factor)
$\gamma_{ES,\ max}$	1.50	(Earth Surcharge Load Factor, maximum)
$\gamma_{ES,\ min}$	0.75	(Earth Surcharge Load Factor, minimum)

Service I Load Factors

γ_{DC}	1.00	(Dead Load Factor, maximum)
γ_{EV}	1.00	(Vertical Earth Pressure Factor, minimum)
γ_{EH}	1.00	(Horizontal Earth Pressure Factor)
γ_{LL}	1.00	(Live Load Factor)

Extreme Event I Load Factors

γ_{DC}	0.90	(Dead Load Factor, maximum)
γ_{EV}	1.00	(Vertical Earth Pressure Factor, minimum)
γ_{EH}	1.50	(Horizontal Earth Pressure Factor)
γ_{LL}	1.00	(Live Load Factor)
γ_{EQ}	1.00	(Earthquake Load Factor)

Capacity

qult	4615	psf	(ultimate bearing pressure)
qall	3000	psf	(allowable bearing pressure, with seismic)
δ	0.40		(coefficient of sliding friction)

MSE Wall Design - Wall Heights and Reinforcement Layers

Gabion No.	H	No. layers re'q	DC Facing (k)	EV_{RZ} (k)	EV_{SB} (k)	Pi (k/FOW)	T_{md} (k/layer/FOW)
1	3	2	0.495	8.1	0.00	0.09	0.046
2	6	4	0.99	16.2	0.00	0.37	0.091
3	9	6	1.485	24.3	0.00	0.82	0.137
4	12	8	1.98	32.4	0.00	1.46	0.183
5	15	10	2.475	40.5	0.00	2.28	0.228

									Rupture			Pullout					
Layer No.	Z (ft)	h (ft)	P_{EH} (k/FOW)	$P_{LS,h}$ (k/FOW)	$q_{LS,V}$ (ksf)	$q_{ES,V}$ (ksf)	$P_{DS,h}$ (k/FOW)	$q_{DS,V}$ (ksf)	$\sigma_{v,max}$ (ksf)	$\sigma_{h,max}$ (ksf)	T_{max} (k)	La (ft)	Le (ft)	Zp (ft)	$\sigma_{v,po}$ (ksf)	$\sigma_{h,po}$ (ksf)	T_{po} (k)
0	0.00	0.00	0.00	0.00	0.10	0.00	0.00	0.00	0.100	0.031	0.046	7.64	14.86	0.00	0.000	0.000	0.000
1	1.50	1.50	0.42	0.03	0.10	0.00	0.00	0.00	0.280	0.087	0.130	6.88	15.62	1.50	0.180	0.056	0.084
2	3.00	3.00	0.91	0.07	0.10	0.00	0.00	0.00	0.460	0.142	0.214	6.11	16.39	3.00	0.360	0.111	0.167
3	4.50	4.50	1.46	0.10	0.10	0.00	0.00	0.00	0.640	0.198	0.297	5.35	17.15	4.50	0.540	0.167	0.251
4	6.00	6.00	2.06	0.14	0.10	0.00	0.00	0.00	0.820	0.254	0.381	4.59	17.91	6.00	0.720	0.223	0.334
5	7.50	7.50	2.73	0.17	0.10	0.00	0.00	0.00	1.000	0.310	0.464	3.82	18.68	7.50	0.900	0.279	0.418
6	9.00	9.00	3.47	0.21	0.10	0.00	0.00	0.00	1.180	0.365	0.548	3.06	19.44	9.00	1.080	0.334	0.502
7	10.50	10.50	4.26	0.24	0.10	0.00	0.00	0.00	1.360	0.421	0.632	2.29	20.21	10.50	1.260	0.390	0.585
8	12.00	12.00	5.12	0.28	0.10	0.00	0.00	0.00	1.540	0.477	0.715	1.53	20.97	12.00	1.440	0.446	0.669
9	13.50	13.50	6.04	0.31	0.10	0.00	0.00	0.00	1.720	0.533	0.799	0.76	21.74	13.50	1.620	0.502	0.752
10	15.00	15.00	7.02	0.34	0.10	0.00	0.00	0.00	1.900	0.588	0.882	0.00	22.50	15.00	1.800	0.557	0.836

*Calc for PEH includes height of final fill above back of reinforced zone

H Height of wall facing
DC Facing Dead Load of wall facing
EV_{RZ} (k) Vertical earth pressure from reinforced zone
EV_{SB} (k) Vertical earth pressure from sloped backfill
Z Depth of reinforcing layer from top of wall
h Depth of reinfocing layer from ground surface at back of reinforced soil zone
P_{EH} Total horizontal earth force @ Z
P_{LS} Horizontal Force due to live load surcharge
$P_{LS,V}$ Vertical Force due to live load surcharge
$\sigma_{v,max}$ Maximum vertical stress in reinforcing layer
$\sigma_{h,max}$ Maximum factored horizontal stress in reinforcing layer
T_{max} Maximum factored load in reinforcement
La Length of active zone
Le Length of resistance zone
Zp Depth of reinforcing layer from ground surface at beginning of resistance zone
$\sigma_{v,po}$ Vertical stress in reinforcing layer for pullout calculation
$\sigma_{h,po}$ Factored horizontal stress in reinforcing layer for pullout calculation
T_{po} Factored load in reinforcement for pullout
Pi Horizontal force due to seismic load on the active zone
T_{md} Additional force at each layer due to seismic load

MSE Wall Design - Reinforcement

Design Reinforcement layers at each layer, max wall height

ϕTnr_1	2.515	k	Capacity of first type geogrid
ϕTnr_2	4.050	k	Capacity of second type geogrid

			STR1					
Layer No.	Z (ft)	h (ft)	T_{max} (k)	T_{po} (k)	Le (ft)	Check Rupture	Le_{min} (ft)	Check Pullout
0	0.00	0.00	0.05	0.00	14.86	OK, G1	#DIV/0!	#DIV/0!
1	1.50	1.50	0.13	0.08	15.62	OK, G1	0.66	OK
2	3.00	3.00	0.21	0.17	16.39	OK, G1	0.66	OK
3	4.50	4.50	0.30	0.25	17.15	OK, G1	0.66	OK
4	6.00	6.00	0.38	0.33	17.91	OK, G1	0.66	OK
5	7.50	7.50	0.46	0.42	18.68	OK, G1	0.66	OK
6	9.00	9.00	0.55	0.50	19.44	OK, G1	0.66	OK
7	10.50	10.50	0.63	0.59	20.21	OK, G1	0.66	OK
8	12.00	12.00	0.72	0.67	20.97	OK, G1	0.66	OK
9	13.50	13.50	0.80	0.75	21.74	OK, G1	0.66	OK
10	15.00	15.00	0.88	0.84	22.50	OK, G1	0.66	OK

MSE Wall Design - Reinforcement

Design Reinforcement layers at each layer, max wall height

ϕTnr_1	2.515	k	Capacity of first type geogrid
ϕTnr_2	4.050	k	Capacity of second type geogrid

		EE1								
Layer No.	Z (ft)	T_{md} (k)	$\sigma_{h,\ max}$ (ksf)	T_{max+md} (k)	Check Rupture	$\sigma_{h,\ po}$ (ksf)	T_{po+md} (k)	Le, min (ft)	Check Pullout	Geogrid Type
0	0.00	0.000	0.023	0.034	OK, G1	0.000	0.000	#DIV/0!	#DIV/0!	G1
1	1.50	0.046	0.064	0.142	OK, G1	0.133	0.246	1.947	OK	G1
2	3.00	0.046	0.105	0.204	OK, G1	0.267	0.446	1.766	OK	G1
3	4.50	0.091	0.147	0.312	OK, G1	0.400	0.691	1.826	OK	G1
4	6.00	0.091	0.188	0.373	OK, G1	0.533	0.891	1.766	OK	G1
5	7.50	0.137	0.229	0.481	OK, G1	0.667	1.137	1.802	OK	G1
6	9.00	0.137	0.271	0.543	OK, G1	0.800	1.337	1.766	OK	G1
7	10.50	0.183	0.312	0.651	OK, G1	0.933	1.583	1.792	OK	G1
8	12.00	0.183	0.353	0.712	OK, G1	1.067	1.783	1.766	OK	G1
9	13.50	0.228	0.394	0.820	OK, G1	1.200	2.028	1.786	OK	G1
10	15.00	0.228	0.436	0.882	OK, G1	1.333	2.228	1.766	OK	G1

MSE Wall Design - Sliding and Eccentricity

Check sliding and eccentricity at each wall height

Sliding, No Facing

Sliding, No Facing

H (ft)	DC Facing (k)	EV_{RZ} (k)	EV_{SB} (k)	$P_{EH,h}$ (k/FOW)	$P_{EH,v}$ (k/FOW)	$P_{LS,h}$ (k/FOW)	$P_{ES,V}$ (k/FOW)	$P_{DS,V}$ (k/FOW)	V (no facing) (k)	ϕR_t	ϕR_{ep}	ϕR_{total}	Vu (k)	Sliding Check
3	NA	8.1	0.00	0.91	0.00	0.07	0.00	NA	8.10	3.24	0.18	3.42	1.48	OK
6	NA	16.2	0.00	2.06	0.00	0.14	0.00	NA	16.20	6.48	0.18	6.66	3.34	OK
9	NA	24.3	0.00	3.47	0.00	0.21	0.00	NA	24.30	9.72	0.18	9.90	5.56	OK
12	NA	32.4	0.00	5.12	0.00	0.28	0.00	NA	32.40	12.96	0.18	13.14	8.16	OK
15	NA	40.5	0.00	7.02	0.00	0.34	0.00	NA	40.50	16.20	0.18	16.38	11.13	OK

Sliding, with Facing

Sliding, with Facing

H (ft)	DC Facing (k)	EV_{RZ} (k)	EV_{SB} (k)	$P_{EH,h}$ (k/FOW)	$P_{EH,v}$ (k/FOW)	$P_{LS,h}$ (k/FOW)	$P_{ES,V}$ (k/FOW)	$P_{DS,V}$ (k/FOW)	V (w/ facing) (k)	ϕR_t	ϕR_{ep}	ϕR_{total}	Vu (k)	Sliding Check
3	0.495	8.1	0.00	0.91	0.00	0.07	0.00	0.00	8.72	3.49	0.18	3.67	1.48	OK
6	0.99	16.2	0.00	2.06	0.00	0.14	0.00	0.00	17.44	6.98	0.18	7.16	3.34	OK
9	1.485	24.3	0.00	3.47	0.00	0.21	0.00	0.00	26.16	10.46	0.18	10.64	5.56	OK
12	1.98	32.4	0.00	5.12	0.00	0.28	0.00	0.00	34.88	13.95	0.18	14.13	8.16	OK
15	2.475	40.5	0.00	7.02	0.00	0.34	0.00	0.00	43.59	17.44	0.18	17.62	11.13	OK

Eccentricity, No Facing

Eccentricity, No Facing

H (ft)	DC Facing (k)	EV_{RZ} (k)	EV_{SB} (k)	$P_{EH,h}$ (k/FOW)	$P_{EH,v}$ (k/FOW)	$P_{LS,h}$ (k/FOW)	$P_{ES,V}$ (k/FOW)	$P_{DS,V}$ (k/FOW)	$X_{(DC)}$ (ft)	$X_{(EVRZ)}$ (ft)	$X_{(EVSB)}$ (ft)	$X_{(PEHh)}$ (ft)	$X_{(PEHV)}$ (ft)	$X_{(PLSh)}$ (ft)	$X_{(PESv)}$ (ft)	∑V (no facing) (k)	∑Mc (no facing) (kft)	e (no facing) (ft)	Check
3	NA	8.1	0.00	0.91	0.00	0.07	0.00	NA	NA	0	3.75	1.43	11.25	1.50	0.00	8.10	2.13	0.26	OK
6	NA	16.2	0.00	2.06	0.00	0.14	0.00	NA	NA	0	3.75	2.76	11.25	3.00	0.00	16.20	9.27	0.57	OK
9	NA	24.3	0.00	3.47	0.00	0.21	0.00	NA	NA	0	3.75	4.02	11.25	4.50	0.00	24.30	22.52	0.93	OK
12	NA	32.4	0.00	5.12	0.00	0.28	0.00	NA	NA	0	3.75	5.23	11.25	6.00	0.00	32.40	43.01	1.33	OK
15	NA	40.5	0.00	7.02	0.00	0.34	0.00	NA	NA	0	3.75	6.40	11.25	7.50	0.00	40.50	71.85	1.77	OK

Eccentricity, with Facing

Eccentricity, with Facing

H (ft)	DC Facing (k)	EV_{RZ} (k)	EV_{SB} (k)	$P_{EH,h}$ (k/FOW)	$P_{EH,v}$ (k/FOW)	$P_{LS,h}$ (k/FOW)	$P_{ES,V}$ (k/FOW)	$P_{DS,V}$ (k/FOW)	$X_{(DC)}$ (ft)	$X_{(EVRZ)}$ (ft)	$X_{(EVSB)}$ (ft)	$X_{(PEHh)}$ (ft)	$X_{(PEHV)}$ (ft)	$X_{(PLSh)}$ (ft)	$X_{(PESv)}$ (ft)	∑V (w/ facing) (k)	∑Mc (w/ facing) (kft)	e (w/ facing) (ft)	Check
3	0.495	8.1	0.00	0.91	0.00	0.07	0.00	0.00	11.25	1.5	5.25	1.43	11.25	1.50	1.50	8.72	-7.31	-0.84	OK
6	0.99	16.2	0.00	2.06	0.00	0.14	0.00	0.00	11.25	1.5	5.25	2.76	11.25	3.00	1.50	17.44	-9.62	-0.55	OK
9	1.485	24.3	0.00	3.47	0.00	0.21	0.00	0.00	11.25	1.5	5.25	4.02	11.25	4.50	1.50	26.16	-5.80	-0.22	OK
12	1.98	32.4	0.00	5.12	0.00	0.28	0.00	0.00	11.25	1.5	5.25	5.23	11.25	6.00	1.50	34.88	5.25	0.15	OK
15	2.475	40.5	0.00	7.02	0.00	0.34	0.00	0.00	11.25	1.5	5.25	6.40	11.25	7.50	1.50	43.59	24.65	0.57	OK

Retaining walls - CIP Conc.

Soil properties : $\gamma_a = 35$ pcf, $\gamma_p = 250$ pcf

$\sigma_a = 3{,}000$ psf, $\sigma_{a\ wind/seismic} = 3{,}000$ psf

$\mu = 0.35$ (Native soil) $\mu = 0.40$ (Gravel)

Seismic $= 7(H)^2$ @ $0.60H$

Size Wall for varying heights :

Seismic :

4'-0" ⇒ $P_{EQ} = 7(4')^2 = 112^{\#}$ @ 2.40'

6'-0" ⇒ $P_{EQ} = 7(6')^2 = 252^{\#}$ @ 3.60'

7'-6" ⇒ $P_{EQ} = 7(7.5')^2 = 394^{\#}$ @ 4.50'

9'-6" ⇒ $P_{EQ} = 7(9.5')^2 = 632^{\#}$ @ 5.70'

use:

8" thick wall w/ 12" thick footing w/ 12" toe	
0'-4'	#5 @ 16" o.c. Wall + FTG X 3'-8"
4'-6'	#5 @ 12" o.c. Wall + FTG X 4'-0"
6'-7.5'	#5 @ 8" o.c. Wall + @ 10" o.c. FTG X 5'-8"
7.5'-9.5'	#5 @ 4" o.c. Wall + @ 6" o.c. FTG X 6'-4"

Sheet No.:_____

Project: St. Helens - Riverwalk - Retaining Wall
Project No.: 20028
Client:
Subject:

Engineer: SC
File: Ret-Wall_4-ft.mcdx
Date:
Rev.:

Retaining wall analysis and design

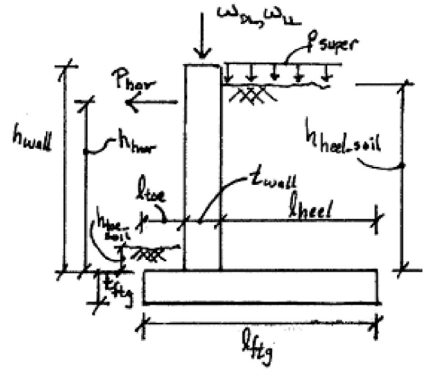

Material properties:

$\gamma_{conc} := 150 \cdot pcf$

$\gamma_{soil} := 120 \cdot pcf$

$\gamma_{EFP\_a} := 35 \cdot pcf$

$\gamma_{EFP\_p} := 250 \cdot pcf$

$\mu_{sliding} := .40$

$q_{all\_brg} := 2000 \cdot psf$

$FS := 1.5$

Loading on wall:

$h_{heel\_soil} := 4 \cdot ft + 0 \cdot in$

$h_{toe\_soil} := 12 \cdot in$

$p_{super} := 100.0 \cdot psf$

$\omega_{DL\_super} := 0.0 \cdot klf$

$\omega_{LL\_super} := 0.0 \cdot klf$

$P_{hor} := 0.0 \cdot kips$

$h_{hor} := 0 \cdot ft$

Wall geometry:

$h_{wall} := 4 \cdot ft + 0 \cdot in$

$t_{wall} := 8 \cdot in$

$p_{wall} := 100 \cdot psf$

$h_{key} := 0 \cdot in$

$l_{key} := 0 \cdot in$

$t_{ftg} := 1 \cdot ft + 0 \cdot in$

$l_{toe} := 1 \cdot ft + 0 \cdot in$

$l_{ftg} := 2 \cdot ft + 8 \cdot in$

$l_{heel} := l_{ftg} - l_{toe} - t_{wall}$

$l_{heel} = 1\ ft$

$b_{nom} := 1 \cdot ft$

$\omega_1 := \omega_{DL\_super} + \omega_{LL\_super}$ $\qquad \omega_1 = 0\ \frac{kips}{ft}$

$P_{ftg} := \gamma_{conc} \cdot (l_{ftg} \cdot t_{ftg} + l_{key} \cdot h_{key}) \cdot b_{nom}$ $\qquad P_{ftg} = 0.4\ kips$

$P_{wall} := p_{wall} \cdot h_{wall} \cdot b_{nom}$ $\qquad P_{wall} = 0.4\ kips$

$P_{heel\_soil} := (\gamma_{soil} \cdot h_{heel\_soil} + p_{super}) \cdot l_{heel} \cdot b_{nom}$ $\qquad P_{heel\_soil} = 0.58\ kips$

$P_{toe\_soil} := \gamma_{soil} \cdot h_{toe\_soil} \cdot l_{toe} \cdot b_{nom}$ $\qquad P_{toe\_soil} = 0.12\ kips$

$P_{total} := P_{ftg} + P_{wall} + P_{heel\_soil} + P_{toe\_soil} + \omega_1 \cdot b_{nom}$ $\qquad P_{total} = 1.5\ kips$

$$M_{OT} := \left(\frac{1}{2} \cdot \gamma_{EFP\_a} \cdot b_{nom} \cdot (h_{heel\_soil} + t_{ftg})^2 \cdot \left(\frac{t_{ftg} + h_{heel\_soil}}{3} \right) + p_{super} \cdot \frac{\gamma_{EFP\_a}}{\gamma_{soil}} \cdot (h_{heel\_soil} + t_{ftg}) \cdot b_{nom} \cdot \left(\frac{t_{ftg} + h_{heel\_soil}}{2} \right) + P_{hor} \cdot (t_{ftg} + h_{hor}) \right) \cdot FS$$

$M_{OT} = 1.641\ ft \cdot kips$

$$M_{OT\_resisting} := P_{ftg} \cdot \frac{l_{ftg}}{2} + P_{wall} \cdot \left(l_{toe} + \frac{t_{wall}}{2} \right) + \omega_1 \cdot b_{nom} \cdot \left(l_{toe} + \frac{t_{wall}}{2} \right) + P_{heel\_soil} \cdot \left(l_{ftg} - \frac{l_{heel}}{2} \right) + P_{toe\_soil} \cdot \frac{l_{toe}}{2}$$

$M_{OT\_resisting} = 2.383\ ft \cdot kips$

$$H_{sliding} := \left(\frac{1}{2} \cdot \gamma_{EFP\_a} \cdot b_{nom} \cdot \left(h_{heel\_soil} + h_{key} + t_{ftg}\right)^2 + p_{super} \cdot \frac{\gamma_{EFP\_a}}{\gamma_{soil}} \cdot b_{nom} \cdot \left(h_{heel\_soil} + h_{key} + t_{ftg}\right) + P_{hor} \right) \cdot FS$$

$H_{sliding} = 0.875\ kips$

$$H_{resisting} := \left(P_{ftg} + P_{wall} + P_{heel\_soil} + 0 \cdot P_{toe\_soil} + \omega_1 \cdot b_{nom}\right) \cdot \mu_{sliding} + \frac{1}{2} \cdot \gamma_{EFP\_p} \cdot b_{nom} \cdot \left(\left(h_{toe\_soil} + t_{ftg} + h_{key}\right)^2 - h_{toe\_soil}^{\ 2}\right)$$

$H_{resisting} = 0.927\ kips$

<u>Soil pressures due to gravity and overturning forces:</u>

Footing size: $B_1 := b_{nom}$ $\quad B_1 = 1\ ft$

$B_2 := l_{ftg}$ $\quad B_2 = 2.667\ ft$

$A := B_1 \cdot B_2$ $\quad A = 2.667\ ft^2$

Moment at mid-width of footing:

$$M := \left(\begin{array}{l} \frac{1}{2} \cdot \gamma_{EFP\_a} \cdot b_{nom} \cdot \left(h_{heel\_soil}\right)^2 \cdot \left(\frac{h_{heel\_soil}}{3}\right) \\ + p_{super} \cdot \frac{\gamma_{EFP\_a}}{\gamma_{soil}} \cdot \left(h_{heel\_soil}\right) \cdot b_{nom} \cdot \left(\frac{h_{heel\_soil}}{2}\right) \\ + \frac{0 \cdot -1}{2} \cdot \gamma_{EFP\_p} \cdot b_{nom} \cdot \left(h_{toe\_soil} + t_{ftg}\right)^2 \cdot \left(\frac{h_{toe\_soil}}{3}\right) \\ + P_{hor} \cdot \left(t_{ftg} + h_{hor}\right) + P_{toe\_soil} \cdot \left(\frac{l_{ftg}}{2} - \frac{l_{toe}}{2}\right) + \left(P_{wall} + \omega_1 \cdot b_{nom}\right) \cdot \left(\frac{l_{ftg}}{2} - l_{toe} - \frac{t_{wall}}{2}\right) \\ + -P_{heel\_soil} \cdot \left(\frac{l_{ftg}}{2} - \frac{l_{heel}}{2}\right) \end{array} \right)$$

$M = 0.223\ ft \cdot kips$

Eccentricity of soil pressure resultant:

$$e := \frac{M}{P_{total}}$$

$e = 0.149\ ft$ $\quad \frac{B_2}{6} = 0.444\ ft$

Maximum soil pressures:

$$q_{max\_prime} := \begin{cases} \left(\frac{P_{total}}{A} \cdot \left(1 + \frac{6 \cdot e}{B_2}\right)\right) & \text{if } e \le \frac{B_2}{6} \\ \frac{2 \cdot P_{total}}{3 \cdot A \cdot \left(0.5 - \frac{e}{B_2}\right)} & \text{else} \end{cases}$$

$q_{max\_prime} = 751\ psf$

$q_{max\_prime} < q_{all\_brg} = 1$

$$q_{min\_prime} := \begin{cases} \left(\frac{P_{total}}{A} \cdot \left(1 - \frac{6 \cdot e}{B_2}\right)\right) & \text{if } e \le \frac{B_2}{6} \\ 0 \cdot psf & \text{else} \end{cases}$$

$q_{min\_prime} = 374\ psf$

<u>Forces in wall at the base of wall:</u>

$$M_{wall} := \left(\frac{1}{2} \cdot \gamma_{EFP\_a} \cdot b_{nom} \cdot \left(h_{heel\_soil}\right)^2 \cdot \frac{h_{heel\_soil}}{3} + p_{super} \cdot \frac{\gamma_{EFP\_a}}{\gamma_{soil}} \cdot \left(h_{heel\_soil}\right) \cdot b_{nom} \cdot \left(\frac{h_{heel\_soil}}{2}\right) + P_{hor} \cdot \left(h_{hor}\right)\right)$$

$$V_{wall} := \left(\frac{1}{2} \cdot \gamma_{EFP\_a} \cdot b_{nom} \cdot \left(h_{heel\_soil}\right)^2 + p_{super} \cdot \frac{\gamma_{EFP\_a}}{\gamma_{soil}} \cdot \left(h_{heel\_soil}\right) \cdot b_{nom} + P_{hor}\right)$$

$1.6 \cdot M_{wall} = 0.971\ ft \cdot kips$

$1.6 \cdot V_{wall} = 0.635\ kips$

$$M_{footing} := P_{heel\_soil} \cdot \frac{l_{heel}}{2} + p_{super} \cdot b_{nom} \cdot \frac{l_{heel}^2}{2}$$

$M_{footing} = 0.34\ ft \cdot kips$

$1.6 \cdot M_{footing} = 0.544\ ft \cdot kips$

Reinforced concrete retaining wall design:

Loads and geometry:

Factored moment: $M_u := 1.6 \cdot M_{wall}$ $\quad M_u = 1\ ft \cdot kips$

Factored shear force: $V_u := 1.6 \cdot V_{wall}$ $\quad V_u = 0.6\ kips$

Slab strip width: $b := b_{nom}$

Wall thickness: $h := t_{wall}$

Cover to reinforcing: $d_{cg} := 4 \cdot in$

Depth to reinforcing: $d := h - d_{cg}$ $\quad d = 4\ in$

Material properties / Design parameters:

Strength reduction factors: Bending: $\phi_b := 0.9$

Shear: $\phi_v := 0.75$

Concrete compressive strength: $f_{c\_p} := 4 \cdot ksi$

Steel yield strength: $f_y := 60 \cdot ksi$

Whitney stress block depth ratio:

$$\beta_1 := \begin{cases} 0.85 & \text{if } f_{c\_p} \le 4 \cdot ksi \\ \left(0.85 - 0.05 \cdot \left(f_{c\_p} \cdot ksi^{-1} - 4\right)\right) & \text{else} \end{cases}$$

Minimum flexural reinforcing:

$\rho_{min} := 200 \cdot f_y^{-1} \cdot psi$ $\quad \rho_{min} = 0.0033$

Maximum flexural reinforcing:

$$\rho_{max} := 0.75 \cdot \left(\frac{0.85 \cdot \beta_1 \cdot f_{c\_p}}{f_y} \cdot \frac{87 \cdot ksi}{87 \cdot ksi + f_y}\right)$$

$\rho_{max} = 0.0214$

Flexural design:

Required area of reinforcing: $A_{s\_reqd} = 0.05\ in^2$

Area of flexural reinforcing:

$BarArea := 0.31 \cdot in^2$

$Spacing := 16 \cdot in$ $\quad A_s := BarArea \cdot \frac{b}{Spacing}$ $\quad A_s = 0.233\ in^2$

Reinforcing ratio: $\rho := \frac{A_s}{b \cdot d}$ $\quad \rho = 0.0048$

Compression block depth:

$a := \frac{A_s \cdot f_y}{0.85 \cdot f_{c\_p} \cdot b}$ $\quad a = 0.342\ in$

Moment capacity:

$\phi M_n := \phi_b \cdot \left(A_s \cdot f_y \cdot \left(d - \frac{a}{2}\right)\right)$ $\quad \phi M_n = 4\ ft \cdot kips$

Shear design:

Area of shear reinforcing: $A_v := 0 \cdot in^2$

Spacing of stirrups: $s := 12 \cdot in$

Concrete shear capacity:

$V_c := 2 \cdot \sqrt{f_{c\_p} \cdot psi} \cdot b \cdot d$ $\quad V_c = 6.1\ kips$

Steel shear capacity: $V_s := \frac{A_v \cdot f_y \cdot d}{s}$

$V_s = 0\ kips$

Shear capacity:

$\phi V_n := \phi_v \cdot (V_c + V_s)$ $\quad \phi V_n = 4.6\ kips$

$M_u < \phi M_n = 1$ $\quad \rho < \rho_{max} = 1$

$V_u < \phi V_n = 1$ $\quad z = 62\ \frac{kips}{in}$

Reinforced concrete retaining wall footing design:

Loads and geometry:

Factored moment: $M_u := 1.6 \cdot M_{footing}$

$M_u = 0.544\ ft \cdot kips$

Slab strip width: $b := 12 \cdot in$

Live to dead load ratio: $LLDLRatio := 3.5$

Wall thickness: $h := t_{ftg}$

Cover to reinforcing: $d_{cg} := 3.25 \cdot in$

Depth to reinforcing: $d := h - d_{cg}$ $\quad d = 8.75\ in$

Material properties / Design parameters:

Strength reduction factors: Bending: $\phi_b := 0.9$

Shear: $\phi_v := 0.85$

Concrete compressive strength: $f_{c\_p} := 4 \cdot ksi$

Steel yield strength: $f_y := 60 \cdot ksi$

Whitney stress block depth ratio:

$$\beta_1 := \begin{cases} 0.85 & \text{if } f_{c\_p} \le 4 \cdot ksi \\ \left(0.85 - 0.05 \cdot \left(f_{c\_p} \cdot ksi^{-1} - 4\right)\right) & \text{else} \end{cases}$$

Minimum flexural reinforcing:

$\rho_{min} := 200 \cdot f_y^{-1} \cdot psi$ $\quad \rho_{min} = 0.0033$

Maximum flexural reinforcing:

$$\rho_{max} := 0.75 \cdot \left(\frac{0.85 \cdot \beta_1 \cdot f_{c\_p}}{f_y} \cdot \frac{87 \cdot ksi}{87 \cdot ksi + f_y}\right)$$

$\rho_{max} = 0.0214$

Flexural design:

Required area of reinforcing: $A_{s\_reqd} = 0.01\ in^2$

Area of flexural reinforcing:

$BarArea := 0.31 \cdot in^2$

$Spacing := 16 \cdot in$ $\quad A_s := BarArea \cdot \frac{b}{Spacing}$ $\quad A_s = 0.233\ in^2$

Reinforcing ratio: $\rho := \frac{A_s}{b \cdot d}$ $\quad \rho = 0.0022$

Compression block depth:

$a := \frac{A_s \cdot f_y}{0.85 \cdot f_{c\_p} \cdot b}$ $\quad a = 0.342\ in$

Moment capacity:

$\phi M_n := \phi_b \cdot \left(A_s \cdot f_y \cdot \left(d - \frac{a}{2}\right)\right)$ $\quad \phi M_n = 9\ ft \cdot kips$

$M_u < \phi M_n = 1$ $\quad \rho < \rho_{max} = 1$

$V_u < \phi V_n = 1$ $\quad z = 13\ \frac{kips}{in}$

Sheet No.:_____

Project: St. Helens - Riverwalk - Retaining Wall
Project No.: 20028
Client:
Subject:

Engineer: SC
File: Ret-Wall_4-ft_EQ.mcdx
Date:
Rev.:

Retaining wall analysis and design

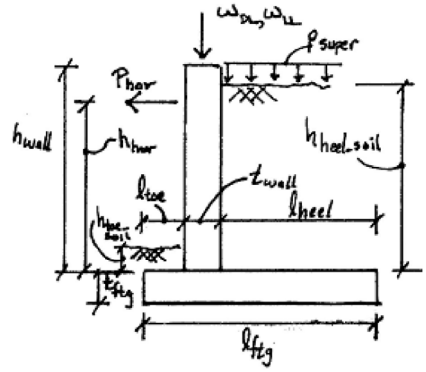

Material properties:

$\gamma_{conc} := 135 \cdot pcf$

$\gamma_{soil} := 108 \cdot pcf$

$\gamma_{EFP\_a} := 35 \cdot pcf$

$\gamma_{EFP\_p} := 250 \cdot pcf$

$\mu_{sliding} := .40$

$q_{all\_brg} := 3000 \cdot psf$

$FS := 1.1$

Loading on wall:

$h_{heel\_soil} := 4 \cdot ft + 0 \cdot in$

$h_{toe\_soil} := 12 \cdot in$

$p_{super} := 0.0 \cdot psf$

$\omega_{DL\_super} := 0.0 \cdot klf$

$\omega_{LL\_super} := 0.0 \cdot klf$

$P_{hor} := 0.112 \cdot kips$

$h_{hor} := 2.40 \cdot ft$

Wall geometry:

$h_{wall} := 4 \cdot ft + 0 \cdot in$

$t_{wall} := 8 \cdot in$

$p_{wall} := 90 \cdot psf$

$h_{key} := 0 \cdot in$

$l_{key} := 0 \cdot in$

$t_{ftg} := 1 \cdot ft + 0 \cdot in$

$l_{toe} := 1 \cdot ft + 0 \cdot in$

$l_{ftg} := 2 \cdot ft + 8 \cdot in$

$l_{heel} := l_{ftg} - l_{toe} - t_{wall}$

$l_{heel} = 1\ ft$

$b_{nom} := 1 \cdot ft$

$\omega_1 := \omega_{DL\_super} + \omega_{LL\_super}$ $\qquad \omega_1 = 0\ \frac{kips}{ft}$

$P_{ftg} := \gamma_{conc} \cdot (l_{ftg} \cdot t_{ftg} + l_{key} \cdot h_{key}) \cdot b_{nom}$ $\qquad P_{ftg} = 0.36\ kips$

$P_{wall} := p_{wall} \cdot h_{wall} \cdot b_{nom}$ $\qquad P_{wall} = 0.36\ kips$

$P_{heel\_soil} := (\gamma_{soil} \cdot h_{heel\_soil} + p_{super}) \cdot l_{heel} \cdot b_{nom}$ $\qquad P_{heel\_soil} = 0.432\ kips$

$P_{toe\_soil} := \gamma_{soil} \cdot h_{toe\_soil} \cdot l_{toe} \cdot b_{nom}$ $\qquad P_{toe\_soil} = 0.108\ kips$

$P_{total} := P_{ftg} + P_{wall} + P_{heel\_soil} + P_{toe\_soil} + \omega_1 \cdot b_{nom}$ $\qquad P_{total} = 1.26\ kips$

$$M_{OT} := \left(\frac{1}{2} \cdot \gamma_{EFP\_a} \cdot b_{nom} \cdot (h_{heel\_soil} + t_{ftg})^2 \cdot \left(\frac{t_{ftg} + h_{heel\_soil}}{3} \right) + p_{super} \cdot \frac{\gamma_{EFP\_a}}{\gamma_{soil}} \cdot (h_{heel\_soil} + t_{ftg}) \cdot b_{nom} \cdot \left(\frac{t_{ftg} + h_{heel\_soil}}{2} \right) + P_{hor} \cdot (t_{ftg} + h_{hor}) \right) \cdot FS$$

$M_{OT} = 1.221\ ft \cdot kips$

$$M_{OT\_resisting} := P_{ftg} \cdot \frac{l_{ftg}}{2} + P_{wall} \cdot \left(l_{toe} + \frac{t_{wall}}{2} \right) + \omega_1 \cdot b_{nom} \cdot \left(l_{toe} + \frac{t_{wall}}{2} \right) + P_{heel\_soil} \cdot \left(l_{ftg} - \frac{l_{heel}}{2} \right) + P_{toe\_soil} \cdot \frac{l_{toe}}{2}$$

$M_{OT\_resisting} = 1.95\ ft \cdot kips$

$$H_{sliding} := \left(\frac{1}{2} \cdot \gamma_{EFP\_a} \cdot b_{nom} \cdot \left(h_{heel\_soil} + h_{key} + t_{ftg}\right)^2 + p_{super} \cdot \frac{\gamma_{EFP\_a}}{\gamma_{soil}} \cdot b_{nom} \cdot \left(h_{heel\_soil} + h_{key} + t_{ftg}\right) + P_{hor} \right) \cdot FS$$

$H_{sliding} = 0.604\ kips$

$$H_{resisting} := \left(P_{ftg} + P_{wall} + P_{heel\_soil} + 0 \cdot P_{toe\_soil} + \omega_1 \cdot b_{nom}\right) \cdot \mu_{sliding} + \frac{1}{2} \cdot \gamma_{EFP\_p} \cdot b_{nom} \cdot \left(\left(h_{toe\_soil} + t_{ftg} + h_{key}\right)^2 - h_{toe\_soil}^{\ 2}\right)$$

$H_{resisting} = 0.836\ kips$

<u>Soil pressures due to gravity and overturning forces:</u>

Footing size: $B_1 := b_{nom}$ $\quad B_1 = 1\ ft$

$B_2 := l_{ftg}$ $\quad B_2 = 2.667\ ft$

$A := B_1 \cdot B_2$ $\quad A = 2.667\ ft^2$

Moment at mid-width of footing:

$$M := \left(\begin{array}{l} \frac{1}{2} \cdot \gamma_{EFP\_a} \cdot b_{nom} \cdot \left(h_{heel\_soil}\right)^2 \cdot \left(\frac{h_{heel\_soil}}{3}\right) \\ + p_{super} \cdot \frac{\gamma_{EFP\_a}}{\gamma_{soil}} \cdot \left(h_{heel\_soil}\right) \cdot b_{nom} \cdot \left(\frac{h_{heel\_soil}}{2}\right) \\ + \frac{0 \cdot -1}{2} \cdot \gamma_{EFP\_p} \cdot b_{nom} \cdot \left(h_{toe\_soil} + t_{ftg}\right)^2 \cdot \left(\frac{h_{toe\_soil}}{3}\right) \\ + P_{hor} \cdot \left(t_{ftg} + h_{hor}\right) + P_{toe\_soil} \cdot \left(\frac{l_{ftg}}{2} - \frac{l_{toe}}{2}\right) + \left(P_{wall} + \omega_1 \cdot b_{nom}\right) \cdot \left(\frac{l_{ftg}}{2} - l_{toe} - \frac{t_{wall}}{2}\right) \\ + -P_{heel\_soil} \cdot \left(\frac{l_{ftg}}{2} - \frac{l_{heel}}{2}\right) \end{array} \right)$$

$M = 0.484\ ft \cdot kips$

Eccentricity of soil pressure resultant:

$e := \frac{M}{P_{total}}$ $\quad e = 0.384\ ft$ $\quad \frac{B_2}{6} = 0.444\ ft$

Maximum soil pressures:

$$q_{max\_prime} := \begin{cases} \left(\frac{P_{total}}{A} \cdot \left(1 + \frac{6 \cdot e}{B_2}\right)\right) & \text{if } e \le \frac{B_2}{6} \\ \frac{2 \cdot P_{total}}{3 \cdot A \cdot \left(0.5 - \frac{e}{B_2}\right)} & \text{else} \end{cases}$$

$q_{max\_prime} = 881\ psf$

$q_{max\_prime} < q_{all\_brg} = 1$

$$q_{min\_prime} := \begin{cases} \left(\frac{P_{total}}{A} \cdot \left(1 - \frac{6 \cdot e}{B_2}\right)\right) & \text{if } e \le \frac{B_2}{6} \\ 0 \cdot psf & \text{else} \end{cases}$$

$q_{min\_prime} = 64\ psf$

<u>Forces in wall at the base of wall:</u>

$$M_{wall} := \left(\frac{1}{2} \cdot \gamma_{EFP\_a} \cdot b_{nom} \cdot \left(h_{heel\_soil}\right)^2 \cdot \frac{h_{heel\_soil}}{3} + p_{super} \cdot \frac{\gamma_{EFP\_a}}{\gamma_{soil}} \cdot \left(h_{heel\_soil}\right) \cdot b_{nom} \cdot \left(\frac{h_{heel\_soil}}{2}\right) + P_{hor} \cdot \left(h_{hor}\right)\right)$$

$$V_{wall} := \left(\frac{1}{2} \cdot \gamma_{EFP\_a} \cdot b_{nom} \cdot \left(h_{heel\_soil}\right)^2 + p_{super} \cdot \frac{\gamma_{EFP\_a}}{\gamma_{soil}} \cdot \left(h_{heel\_soil}\right) \cdot b_{nom} + P_{hor}\right)$$

$1.6 \cdot M_{wall} = 1.027\ ft \cdot kips$

$1.6 \cdot V_{wall} = 0.627\ kips$

$$M_{footing} := P_{heel\_soil} \cdot \frac{l_{heel}}{2} + p_{super} \cdot b_{nom} \cdot \frac{l_{heel}^2}{2}$$

$M_{footing} = 0.216\ ft \cdot kips$

$1.6 \cdot M_{footing} = 0.346\ ft \cdot kips$

Reinforced concrete retaining wall design:

Loads and geometry:

Factored moment: $M_u := 1.6 \cdot M_{wall}$ $\quad M_u = 1\ ft \cdot kips$

Factored shear force: $V_u := 1.6 \cdot V_{wall}$ $\quad V_u = 0.6\ kips$

Slab strip width: $b := b_{nom}$

Wall thickness: $h := t_{wall}$

Cover to reinforcing: $d_{cg} := 4 \cdot in$

Depth to reinforcing: $d := h - d_{cg}$ $\quad d = 4\ in$

Material properties / Design parameters:

Strength reduction factors: Bending: $\phi_b := 0.9$

Shear: $\phi_v := 0.75$

Concrete compressive strength: $f_{c\_p} := 4 \cdot ksi$

Steel yield strength: $f_y := 60 \cdot ksi$

Whitney stress block depth ratio:

$$\beta_1 := \begin{cases} 0.85 & \text{if } f_{c\_p} \le 4 \cdot ksi \\ \left(0.85 - 0.05 \cdot \left(f_{c\_p} \cdot ksi^{-1} - 4\right)\right) & \text{else} \end{cases}$$

Minimum flexural reinforcing:

$\rho_{min} := 200 \cdot f_y^{-1} \cdot psi$ $\quad \rho_{min} = 0.0033$

Maximum flexural reinforcing:

$$\rho_{max} := 0.75 \cdot \left(\frac{0.85 \cdot \beta_1 \cdot f_{c\_p}}{f_y} \cdot \frac{87 \cdot ksi}{87 \cdot ksi + f_y}\right)$$

$\rho_{max} = 0.0214$

Flexural design:

Required area of reinforcing: $A_{s\_reqd} = 0.06\ in^2$

Area of flexural reinforcing:

$BarArea := 0.31 \cdot in^2$

$Spacing := 16 \cdot in$ $\quad A_s := BarArea \cdot \frac{b}{Spacing}$ $\quad A_s = 0.233\ in^2$

Reinforcing ratio: $\rho := \frac{A_s}{b \cdot d}$ $\quad \rho = 0.0048$

Compression block depth:

$a := \frac{A_s \cdot f_y}{0.85 \cdot f_{c\_p} \cdot b}$ $\quad a = 0.342\ in$

Moment capacity:

$\phi M_n := \phi_b \cdot \left(A_s \cdot f_y \cdot \left(d - \frac{a}{2}\right)\right)$ $\quad \phi M_n = 4\ ft \cdot kips$

Shear design:

Area of shear reinforcing: $A_v := 0 \cdot in^2$

Spacing of stirrups: $s := 12 \cdot in$

Concrete shear capacity:

$V_c := 2 \cdot \sqrt{f_{c\_p} \cdot psi} \cdot b \cdot d$ $\quad V_c = 6.1\ kips$

Steel shear capacity: $V_s := \frac{A_v \cdot f_y \cdot d}{s}$

$V_s = 0\ kips$

Shear capacity:

$\phi V_n := \phi_v \cdot (V_c + V_s)$ $\quad \phi V_n = 4.6\ kips$

$M_u < \phi M_n = 1$ $\quad \rho < \rho_{max} = 1$

$V_u < \phi V_n = 1$ $\quad z = 66\ \frac{kips}{in}$

Reinforced concrete retaining wall footing design:

Loads and geometry:

Factored moment: $M_u := 1.6 \cdot M_{footing}$

$M_u = 0.346\ ft \cdot kips$

Slab strip width: $b := 12 \cdot in$

Live to dead load ratio: $LLDLRatio := 3.5$

Wall thickness: $h := t_{ftg}$

Cover to reinforcing: $d_{cg} := 3.25 \cdot in$

Depth to reinforcing: $d := h - d_{cg}$ $\quad d = 8.75\ in$

Material properties / Design parameters:

Strength reduction factors: Bending: $\phi_b := 0.9$

Shear: $\phi_v := 0.85$

Concrete compressive strength: $f_{c\_p} := 4 \cdot ksi$

Steel yield strength: $f_y := 60 \cdot ksi$

Whitney stress block depth ratio:

$$\beta_1 := \begin{cases} 0.85 & \text{if } f_{c\_p} \le 4 \cdot ksi \\ \left(0.85 - 0.05 \cdot \left(f_{c\_p} \cdot ksi^{-1} - 4\right)\right) & \text{else} \end{cases}$$

Minimum flexural reinforcing:

$\rho_{min} := 200 \cdot f_y^{-1} \cdot psi$ $\quad \rho_{min} = 0.0033$

Maximum flexural reinforcing:

$$\rho_{max} := 0.75 \cdot \left(\frac{0.85 \cdot \beta_1 \cdot f_{c\_p}}{f_y} \cdot \frac{87 \cdot ksi}{87 \cdot ksi + f_y}\right)$$

$\rho_{max} = 0.0214$

Flexural design:

Required area of reinforcing: $A_{s\_reqd} = \left(8.78 \cdot 10^{-3}\right)\ in^2$

Area of flexural reinforcing:

$BarArea := 0.31 \cdot in^2$

$Spacing := 16 \cdot in$ $\quad A_s := BarArea \cdot \frac{b}{Spacing}$ $\quad A_s = 0.233\ in^2$

Reinforcing ratio: $\rho := \frac{A_s}{b \cdot d}$ $\quad \rho = 0.0022$

Compression block depth:

$a := \frac{A_s \cdot f_y}{0.85 \cdot f_{c\_p} \cdot b}$ $\quad a = 0.342\ in$

Moment capacity:

$\phi M_n := \phi_b \cdot \left(A_s \cdot f_y \cdot \left(d - \frac{a}{2}\right)\right)$ $\quad \phi M_n = 9\ ft \cdot kips$

$M_u < \phi M_n = 1$ $\quad \rho < \rho_{max} = 1$

$V_u < \phi V_n = 1$ $\quad z = 8\ \frac{kips}{in}$

Sheet No.:_____

Project: St. Helens - Riverwalk - Retaining Wall
Project No.: 20028
Client:
Subject:

Engineer: SC
File: Ret-Wall_6-ft.mcdx
Date:
Rev.:

Retaining wall analysis and design

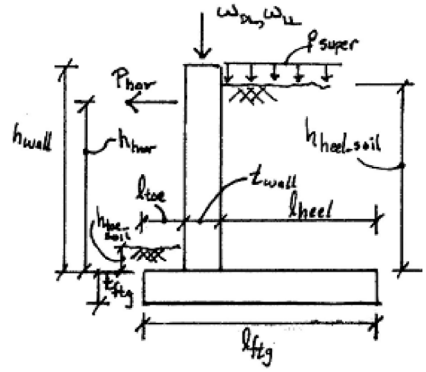

Material properties:

$\gamma_{conc} := 150 \cdot pcf$

$\gamma_{soil} := 120 \cdot pcf$

$\gamma_{EFP\_a} := 35 \cdot pcf$

$\gamma_{EFP\_p} := 250 \cdot pcf$

$\mu_{sliding} := .40$

$q_{all\_brg} := 2000 \cdot psf$

$FS := 1.5$

Loading on wall:

$h_{heel\_soil} := 6 \cdot ft + 0 \cdot in$

$h_{toe\_soil} := 12 \cdot in$

$p_{super} := 100.0 \cdot psf$

$\omega_{DL\_super} := 0.0 \cdot klf$

$\omega_{LL\_super} := 0.0 \cdot klf$

$P_{hor} := 0.0 \cdot kips$

$h_{hor} := 0 \cdot ft$

Wall geometry:

$h_{wall} := 6 \cdot ft + 0 \cdot in$

$t_{wall} := 8 \cdot in$

$p_{wall} := 100 \cdot psf$

$h_{key} := 0 \cdot in$

$l_{key} := 0 \cdot in$

$t_{ftg} := 1 \cdot ft + 0 \cdot in$

$l_{toe} := 1 \cdot ft + 0 \cdot in$

$l_{ftg} := 4 \cdot ft + 0 \cdot in$

$l_{heel} := l_{ftg} - l_{toe} - t_{wall}$

$l_{heel} = 2.333\ ft$

$b_{nom} := 1 \cdot ft$

$\omega_1 := \omega_{DL\_super} + \omega_{LL\_super}$ $\qquad \omega_1 = 0\ \frac{kips}{ft}$

$P_{ftg} := \gamma_{conc} \cdot (l_{ftg} \cdot t_{ftg} + l_{key} \cdot h_{key}) \cdot b_{nom}$ $\qquad P_{ftg} = 0.6\ kips$

$P_{wall} := p_{wall} \cdot h_{wall} \cdot b_{nom}$ $\qquad P_{wall} = 0.6\ kips$

$P_{heel\_soil} := (\gamma_{soil} \cdot h_{heel\_soil} + p_{super}) \cdot l_{heel} \cdot b_{nom}$ $\qquad P_{heel\_soil} = 1.913\ kips$

$P_{toe\_soil} := \gamma_{soil} \cdot h_{toe\_soil} \cdot l_{toe} \cdot b_{nom}$ $\qquad P_{toe\_soil} = 0.12\ kips$

$P_{total} := P_{ftg} + P_{wall} + P_{heel\_soil} + P_{toe\_soil} + \omega_1 \cdot b_{nom}$ $\qquad P_{total} = 3.233\ kips$

$$M_{OT} := \left(\frac{1}{2} \cdot \gamma_{EFP\_a} \cdot b_{nom} \cdot (h_{heel\_soil} + t_{ftg})^2 \cdot \left(\frac{t_{ftg} + h_{heel\_soil}}{3} \right) + p_{super} \cdot \frac{\gamma_{EFP\_a}}{\gamma_{soil}} \cdot (h_{heel\_soil} + t_{ftg}) \cdot b_{nom} \cdot \left(\frac{t_{ftg} + h_{heel\_soil}}{2} \right) + P_{hor} \cdot (t_{ftg} + h_{hor}) \right) \cdot FS$$

$M_{OT} = 4.073\ ft \cdot kips$

$$M_{OT\_resisting} := P_{ftg} \cdot \frac{l_{ftg}}{2} + P_{wall} \cdot \left(l_{toe} + \frac{t_{wall}}{2} \right) + \omega_1 \cdot b_{nom} \cdot \left(l_{toe} + \frac{t_{wall}}{2} \right) + P_{heel\_soil} \cdot \left(l_{ftg} - \frac{l_{heel}}{2} \right) + P_{toe\_soil} \cdot \frac{l_{toe}}{2}$$

$M_{OT\_resisting} = 7.481\ ft \cdot kips$

$$H_{sliding} := \left(\frac{1}{2} \cdot \gamma_{EFP\_a} \cdot b_{nom} \cdot \left(h_{heel\_soil} + h_{key} + t_{ftg}\right)^2 + p_{super} \cdot \frac{\gamma_{EFP\_a}}{\gamma_{soil}} \cdot b_{nom} \cdot \left(h_{heel\_soil} + h_{key} + t_{ftg}\right) + P_{hor} \right) \cdot FS$$

$H_{sliding} = 1.593\ kips$

$$H_{resisting} := \left(P_{ftg} + P_{wall} + P_{heel\_soil} + 0 \cdot P_{toe\_soil} + \omega_1 \cdot b_{nom}\right) \cdot \mu_{sliding} + \frac{1}{2} \cdot \gamma_{EFP\_p} \cdot b_{nom} \cdot \left(\left(h_{toe\_soil} + t_{ftg} + h_{key}\right)^2 - h_{toe\_soil}^{\ 2}\right)$$

$H_{resisting} = 1.62\ kips$

<u>Soil pressures due to gravity and overturning forces:</u>

Footing size: $B_1 := b_{nom}$ $\quad B_1 = 1\ ft$

$B_2 := l_{ftg}$ $\quad B_2 = 4\ ft$

$A := B_1 \cdot B_2$ $\quad A = 4\ ft^2$

Moment at mid-width of footing:

$$M := \left(\begin{array}{l} \frac{1}{2} \cdot \gamma_{EFP\_a} \cdot b_{nom} \cdot \left(h_{heel\_soil}\right)^2 \cdot \left(\frac{h_{heel\_soil}}{3}\right) \\ + p_{super} \cdot \frac{\gamma_{EFP\_a}}{\gamma_{soil}} \cdot \left(h_{heel\_soil}\right) \cdot b_{nom} \cdot \left(\frac{h_{heel\_soil}}{2}\right) \\ + \frac{0 \cdot -1}{2} \cdot \gamma_{EFP\_p} \cdot b_{nom} \cdot \left(h_{toe\_soil} + t_{ftg}\right)^2 \cdot \left(\frac{h_{toe\_soil}}{3}\right) \\ + P_{hor} \cdot \left(t_{ftg} + h_{hor}\right) + P_{toe\_soil} \cdot \left(\frac{l_{ftg}}{2} - \frac{l_{toe}}{2}\right) + \left(P_{wall} + \omega_1 \cdot b_{nom}\right) \cdot \left(\frac{l_{ftg}}{2} - l_{toe} - \frac{t_{wall}}{2}\right) \\ + -P_{heel\_soil} \cdot \left(\frac{l_{ftg}}{2} - \frac{l_{heel}}{2}\right) \end{array} \right)$$

$M = 0.771\ ft \cdot kips$

Eccentricity of soil pressure resultant:

$$e := \frac{M}{P_{total}}$$

$e = 0.238\ ft$ $\quad \frac{B_2}{6} = 0.667\ ft$

Maximum soil pressures:

$$q_{max\_prime} := \begin{cases} \text{if } e \le \frac{B_2}{6} \\ \quad \left(\frac{P_{total}}{A} \cdot \left(1 + \frac{6 \cdot e}{B_2}\right)\right) \\ \text{else} \\ \quad \frac{2 \cdot P_{total}}{3 \cdot A \cdot \left(0.5 - \frac{e}{B_2}\right)} \end{cases}$$

$q_{max\_prime} = 1097\ psf$

$q_{max\_prime} < q_{all\_brg} = 1$

$$q_{min\_prime} := \begin{cases} \left(\frac{P_{total}}{A} \cdot \left(1 - \frac{6 \cdot e}{B_2}\right)\right) & \text{if } e \le \frac{B_2}{6} \\ 0 \cdot psf & \text{else} \end{cases}$$

$q_{min\_prime} = 519\ psf$

Forces in wall at the base of wall:

$$M_{wall} := \left(\frac{1}{2} \cdot \gamma_{EFP\_a} \cdot b_{nom} \cdot \left(h_{heel\_soil}\right)^2 \cdot \frac{h_{heel\_soil}}{3} + p_{super} \cdot \frac{\gamma_{EFP\_a}}{\gamma_{soil}} \cdot \left(h_{heel\_soil}\right) \cdot b_{nom} \cdot \left(\frac{h_{heel\_soil}}{2}\right) + P_{hor} \cdot \left(h_{hor}\right)\right)$$

$$V_{wall} := \left(\frac{1}{2} \cdot \gamma_{EFP\_a} \cdot b_{nom} \cdot \left(h_{heel\_soil}\right)^2 + p_{super} \cdot \frac{\gamma_{EFP\_a}}{\gamma_{soil}} \cdot \left(h_{heel\_soil}\right) \cdot b_{nom} + P_{hor}\right)$$

$1.6 \cdot M_{wall} = 2.856\ ft \cdot kips$

$1.6 \cdot V_{wall} = 1.288\ kips$

$$M_{footing} := P_{heel\_soil} \cdot \frac{l_{heel}}{2} + p_{super} \cdot b_{nom} \cdot \frac{l_{heel}^2}{2}$$

$M_{footing} = 2.504\ ft \cdot kips$

$1.6 \cdot M_{footing} = 4.007\ ft \cdot kips$

Reinforced concrete retaining wall design:

Loads and geometry:

Factored moment: $M_u := 1.6 \cdot M_{wall}$ $\quad M_u = 2.9\ ft \cdot kips$

Factored shear force: $V_u := 1.6 \cdot V_{wall}$ $\quad V_u = 1.3\ kips$

Slab strip width: $b := b_{nom}$

Wall thickness: $h := t_{wall}$

Cover to reinforcing: $d_{cg} := 4 \cdot in$

Depth to reinforcing: $d := h - d_{cg}$ $\quad d = 4\ in$

Material properties / Design parameters:

Strength reduction factors: Bending: $\phi_b := 0.9$

Shear: $\phi_v := 0.75$

Concrete compressive strength: $f_{c\_p} := 4 \cdot ksi$

Steel yield strength: $f_y := 60 \cdot ksi$

Whitney stress block depth ratio:

$$\beta_1 := \begin{cases} 0.85 & \text{if } f_{c\_p} \le 4 \cdot ksi \\ \left(0.85 - 0.05 \cdot \left(f_{c\_p} \cdot ksi^{-1} - 4\right)\right) & \text{else} \end{cases}$$

Minimum flexural reinforcing:

$\rho_{min} := 200 \cdot f_y^{-1} \cdot psi$ $\quad \rho_{min} = 0.0033$

Maximum flexural reinforcing:

$$\rho_{max} := 0.75 \cdot \left(\frac{0.85 \cdot \beta_1 \cdot f_{c\_p}}{f_y} \cdot \frac{87 \cdot ksi}{87 \cdot ksi + f_y}\right)$$

$\rho_{max} = 0.0214$

Flexural design:

Required area of reinforcing: $A_{s\_reqd} = 0.16\ in^2$

Area of flexural reinforcing:

$BarArea := 0.31 \cdot in^2$

$Spacing := 12 \cdot in$ $\quad A_s := BarArea \cdot \frac{b}{Spacing}$ $\quad A_s = 0.31\ in^2$

Reinforcing ratio: $\rho := \frac{A_s}{b \cdot d}$ $\quad \rho = 0.0065$

Compression block depth:

$a := \frac{A_s \cdot f_y}{0.85 \cdot f_{c\_p} \cdot b}$ $\quad a = 0.456\ in$

Moment capacity:

$\phi M_n := \phi_b \cdot \left(A_s \cdot f_y \cdot \left(d - \frac{a}{2}\right)\right)$ $\quad \phi M_n = 5.3\ ft \cdot kips$

Shear design:

Area of shear reinforcing: $A_v := 0 \cdot in^2$

Spacing of stirrups: $s := 12 \cdot in$

Concrete shear capacity:

$V_c := 2 \cdot \sqrt{f_{c\_p} \cdot psi} \cdot b \cdot d$ $\quad V_c = 6.1\ kips$

Steel shear capacity: $V_s := \frac{A_v \cdot f_y \cdot d}{s}$

$V_s = 0\ kips$

Shear capacity:

$\phi V_n := \phi_v \cdot (V_c + V_s)$ $\quad \phi V_n = 4.6\ kips$

$M_u < \phi M_n = 1$ $\quad \rho < \rho_{max} = 1$

$V_u < \phi V_n = 1$ $\quad z = 138\ \frac{kips}{in}$

Reinforced concrete retaining wall footing design:

Loads and geometry:

Factored moment: $M_u := 1.6 \cdot M_{footing}$

$M_u = 4.007\ ft \cdot kips$

Slab strip width: $b := 12 \cdot in$

Live to dead load ratio: $LLDLRatio := 3.5$

Wall thickness: $h := t_{ftg}$

Cover to reinforcing: $d_{cg} := 3.25 \cdot in$

Depth to reinforcing: $d := h - d_{cg}$ $\quad d = 8.75\ in$

Material properties / Design parameters:

Strength reduction factors: Bending: $\phi_b := 0.9$

Shear: $\phi_v := 0.85$

Concrete compressive strength: $f_{c\_p} := 4 \cdot ksi$

Steel yield strength: $f_y := 60 \cdot ksi$

Whitney stress block depth ratio:

$$\beta_1 := \begin{cases} 0.85 & \text{if } f_{c\_p} \le 4 \cdot ksi \\ \left(0.85 - 0.05 \cdot \left(f_{c\_p} \cdot ksi^{-1} - 4\right)\right) & \text{else} \end{cases}$$

Minimum flexural reinforcing:

$\rho_{min} := 200 \cdot f_y^{-1} \cdot psi$ $\quad \rho_{min} = 0.0033$

Maximum flexural reinforcing:

$$\rho_{max} := 0.75 \cdot \left(\frac{0.85 \cdot \beta_1 \cdot f_{c\_p}}{f_y} \cdot \frac{87 \cdot ksi}{87 \cdot ksi + f_y}\right)$$

$\rho_{max} = 0.0214$

Flexural design:

Required area of reinforcing: $A_{s\_reqd} = 0.10\ in^2$

Area of flexural reinforcing:

$BarArea := 0.31 \cdot in^2$

$Spacing := 12 \cdot in$ $\quad A_s := BarArea \cdot \frac{b}{Spacing}$ $\quad A_s = 0.31\ in^2$

Reinforcing ratio: $\rho := \frac{A_s}{b \cdot d}$ $\quad \rho = 0.003$

Compression block depth:

$a := \frac{A_s \cdot f_y}{0.85 \cdot f_{c\_p} \cdot b}$ $\quad a = 0.456\ in$

Moment capacity:

$\phi M_n := \phi_b \cdot \left(A_s \cdot f_y \cdot \left(d - \frac{a}{2}\right)\right)$ $\quad \phi M_n = 11.9\ ft \cdot kips$

$M_u < \phi M_n = 1$ $\quad \rho < \rho_{max} = 1$

$V_u < \phi V_n = 1$ $\quad z = 73\ \frac{kips}{in}$

Project: St. Helens - Riverwalk - Retaining Wall
Project No.: 20028
Client:
Subject:

Engineer: SC
File: Ret-Wall_6-ft_EQ.mcdx
Date:
Rev.:

Retaining wall analysis and design

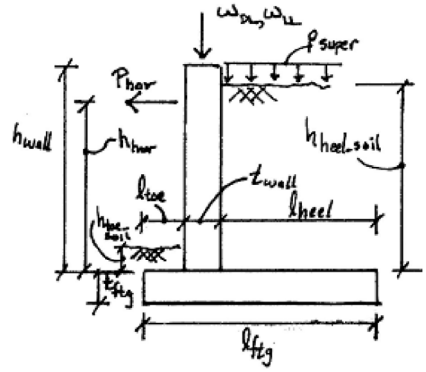

Material properties:

$\gamma_{conc} := 135 \cdot pcf$

$\gamma_{soil} := 108 \cdot pcf$

$\gamma_{EFP\_a} := 35 \cdot pcf$

$\gamma_{EFP\_p} := 250 \cdot pcf$

$\mu_{sliding} := .40$

$q_{all\_brg} := 3000 \cdot psf$

$FS := 1.1$

Loading on wall:

$h_{heel\_soil} := 6 \cdot ft + 0 \cdot in$

$h_{toe\_soil} := 12 \cdot in$

$p_{super} := 0.0 \cdot psf$

$\omega_{DL\_super} := 0.0 \cdot klf$

$\omega_{LL\_super} := 0.0 \cdot klf$

$P_{hor} := 0.252 \cdot kips$

$h_{hor} := 4.20 \cdot ft$

Wall geometry:

$h_{wall} := 6 \cdot ft + 0 \cdot in$

$t_{wall} := 8 \cdot in$

$p_{wall} := 90 \cdot psf$

$h_{key} := 0 \cdot in$

$l_{key} := 0 \cdot in$

$t_{ftg} := 1 \cdot ft + 0 \cdot in$

$l_{toe} := 1 \cdot ft + 0 \cdot in$

$l_{ftg} := 4 \cdot ft + 0 \cdot in$

$l_{heel} := l_{ftg} - l_{toe} - t_{wall}$

$l_{heel} = 2.333\ ft$

$b_{nom} := 1 \cdot ft$

$\omega_1 := \omega_{DL\_super} + \omega_{LL\_super}$ $\qquad \omega_1 = 0\ \frac{kips}{ft}$

$P_{ftg} := \gamma_{conc} \cdot (l_{ftg} \cdot t_{ftg} + l_{key} \cdot h_{key}) \cdot b_{nom}$ $\qquad P_{ftg} = 0.54\ kips$

$P_{wall} := p_{wall} \cdot h_{wall} \cdot b_{nom}$ $\qquad P_{wall} = 0.54\ kips$

$P_{heel\_soil} := (\gamma_{soil} \cdot h_{heel\_soil} + p_{super}) \cdot l_{heel} \cdot b_{nom}$ $\qquad P_{heel\_soil} = 1.512\ kips$

$P_{toe\_soil} := \gamma_{soil} \cdot h_{toe\_soil} \cdot l_{toe} \cdot b_{nom}$ $\qquad P_{toe\_soil} = 0.108\ kips$

$P_{total} := P_{ftg} + P_{wall} + P_{heel\_soil} + P_{toe\_soil} + \omega_1 \cdot b_{nom}$ $\qquad P_{total} = 2.7\ kips$

$$M_{OT} := \left(\frac{1}{2} \cdot \gamma_{EFP\_a} \cdot b_{nom} \cdot (h_{heel\_soil} + t_{ftg})^2 \cdot \left(\frac{t_{ftg} + h_{heel\_soil}}{3} \right) + p_{super} \cdot \frac{\gamma_{EFP\_a}}{\gamma_{soil}} \cdot (h_{heel\_soil} + t_{ftg}) \cdot b_{nom} \cdot \left(\frac{t_{ftg} + h_{heel\_soil}}{2} \right) + P_{hor} \cdot (t_{ftg} + h_{hor}) \right) \cdot FS$$

$M_{OT} = 3.642\ ft \cdot kips$

$$M_{OT\_resisting} := P_{ftg} \cdot \frac{l_{ftg}}{2} + P_{wall} \cdot \left(l_{toe} + \frac{t_{wall}}{2} \right) + \omega_1 \cdot b_{nom} \cdot \left(l_{toe} + \frac{t_{wall}}{2} \right) + P_{heel\_soil} \cdot \left(l_{ftg} - \frac{l_{heel}}{2} \right) + P_{toe\_soil} \cdot \frac{l_{toe}}{2}$$

$M_{OT\_resisting} = 6.138\ ft \cdot kips$

$$H_{sliding} := \left(\frac{1}{2} \cdot \gamma_{EFP\_a} \cdot b_{nom} \cdot \left(h_{heel\_soil} + h_{key} + t_{ftg}\right)^2 + p_{super} \cdot \frac{\gamma_{EFP\_a}}{\gamma_{soil}} \cdot b_{nom} \cdot \left(h_{heel\_soil} + h_{key} + t_{ftg}\right) + P_{hor} \right) \cdot FS$$

$H_{sliding} = 1.22\ kips$

$$H_{resisting} := \left(P_{ftg} + P_{wall} + P_{heel\_soil} + 0 \cdot P_{toe\_soil} + \omega_1 \cdot b_{nom}\right) \cdot \mu_{sliding} + \frac{1}{2} \cdot \gamma_{EFP\_p} \cdot b_{nom} \cdot \left(\left(h_{toe\_soil} + t_{ftg} + h_{key}\right)^2 - h_{toe\_soil}^{\ 2}\right)$$

$H_{resisting} = 1.412\ kips$

<u>Soil pressures due to gravity and overturning forces:</u>

Footing size: $B_1 := b_{nom}$ $\quad B_1 = 1\ ft$

$B_2 := l_{ftg}$ $\quad B_2 = 4\ ft$

$A := B_1 \cdot B_2$ $\quad A = 4\ ft^2$

Moment at mid-width of footing:

$$M := \left(\begin{array}{l} \frac{1}{2} \cdot \gamma_{EFP\_a} \cdot b_{nom} \cdot \left(h_{heel\_soil}\right)^2 \cdot \left(\frac{h_{heel\_soil}}{3}\right) \\ + p_{super} \cdot \frac{\gamma_{EFP\_a}}{\gamma_{soil}} \cdot \left(h_{heel\_soil}\right) \cdot b_{nom} \cdot \left(\frac{h_{heel\_soil}}{2}\right) \\ + \frac{0 \cdot -1}{2} \cdot \gamma_{EFP\_p} \cdot b_{nom} \cdot \left(h_{toe\_soil} + t_{ftg}\right)^2 \cdot \left(\frac{h_{toe\_soil}}{3}\right) \\ + P_{hor} \cdot \left(t_{ftg} + h_{hor}\right) + P_{toe\_soil} \cdot \left(\frac{l_{ftg}}{2} - \frac{l_{toe}}{2}\right) + \left(P_{wall} + \omega_1 \cdot b_{nom}\right) \cdot \left(\frac{l_{ftg}}{2} - l_{toe} - \frac{t_{wall}}{2}\right) \\ + -P_{heel\_soil} \cdot \left(\frac{l_{ftg}}{2} - \frac{l_{heel}}{2}\right) \end{array} \right)$$

$M = 1.832\ ft \cdot kips$

Eccentricity of soil pressure resultant:

$e := \frac{M}{P_{total}}$ $\quad e = 0.679\ ft$ $\quad \frac{B_2}{6} = 0.667\ ft$

Maximum soil pressures:

$$q_{max\_prime} := \begin{cases} \text{if } e \le \frac{B_2}{6} \\ \quad \left(\frac{P_{total}}{A} \cdot \left(1 + \frac{6 \cdot e}{B_2}\right)\right) \\ \text{else} \\ \quad \frac{2 \cdot P_{total}}{3 \cdot A \cdot \left(0.5 - \frac{e}{B_2}\right)} \end{cases}$$

$q_{max\_prime} = 1362\ psf$

$q_{max\_prime} < q_{all\_brg} = 1$

$$q_{min\_prime} := \begin{cases} \left(\frac{P_{total}}{A} \cdot \left(1 - \frac{6 \cdot e}{B_2}\right)\right) & \text{if } e \le \frac{B_2}{6} \\ 0 \cdot psf & \text{else} \end{cases}$$

$q_{min\_prime} = 0\ psf$

Forces in wall at the base of wall:

$$M_{wall} := \left(\frac{1}{2} \cdot \gamma_{EFP\_a} \cdot b_{nom} \cdot \left(h_{heel\_soil}\right)^2 \cdot \frac{h_{heel\_soil}}{3} + p_{super} \cdot \frac{\gamma_{EFP\_a}}{\gamma_{soil}} \cdot \left(h_{heel\_soil}\right) \cdot b_{nom} \cdot \left(\frac{h_{heel\_soil}}{2}\right) + P_{hor} \cdot \left(h_{hor}\right)\right)$$

$$V_{wall} := \left(\frac{1}{2} \cdot \gamma_{EFP\_a} \cdot b_{nom} \cdot \left(h_{heel\_soil}\right)^2 + p_{super} \cdot \frac{\gamma_{EFP\_a}}{\gamma_{soil}} \cdot \left(h_{heel\_soil}\right) \cdot b_{nom} + P_{hor}\right)$$

$1.6 \cdot M_{wall} = 3.709\ ft \cdot kips$

$1.6 \cdot V_{wall} = 1.411\ kips$

$$M_{footing} := P_{heel\_soil} \cdot \frac{l_{heel}}{2} + p_{super} \cdot b_{nom} \cdot \frac{l_{heel}^2}{2}$$

$M_{footing} = 1.764\ ft \cdot kips$

$1.6 \cdot M_{footing} = 2.822\ ft \cdot kips$

Reinforced concrete retaining wall design:

Loads and geometry:

Factored moment: $M_u := 1.6 \cdot M_{wall}$ $\quad M_u = 3.7\ ft \cdot kips$

Factored shear force: $V_u := 1.6 \cdot V_{wall}$ $\quad V_u = 1.4\ kips$

Slab strip width: $b := b_{nom}$

Wall thickness: $h := t_{wall}$

Cover to reinforcing: $d_{cg} := 4 \cdot in$

Depth to reinforcing: $d := h - d_{cg}$ $\quad d = 4\ in$

Material properties / Design parameters:

Strength reduction factors: Bending: $\phi_b := 0.9$

Shear: $\phi_v := 0.75$

Concrete compressive strength: $f_{c\_p} := 4 \cdot ksi$

Steel yield strength: $f_y := 60 \cdot ksi$

Whitney stress block depth ratio:

$$\beta_1 := \begin{cases} 0.85 & \text{if } f_{c\_p} \le 4 \cdot ksi \\ \left(0.85 - 0.05 \cdot \left(f_{c\_p} \cdot ksi^{-1} - 4\right)\right) & \text{else} \end{cases}$$

Minimum flexural reinforcing:

$\rho_{min} := 200 \cdot f_y^{-1} \cdot psi$ $\quad \rho_{min} = 0.0033$

Maximum flexural reinforcing:

$$\rho_{max} := 0.75 \cdot \left(\frac{0.85 \cdot \beta_1 \cdot f_{c\_p}}{f_y} \cdot \frac{87 \cdot ksi}{87 \cdot ksi + f_y}\right)$$

$$\rho_{max} = 0.0214$$

Flexural design:

Required area of reinforcing: $A_{s\_reqd} = 0.21\ in^2$

Area of flexural reinforcing:

$BarArea := 0.31 \cdot in^2$

$Spacing := 12 \cdot in$ $\quad A_s := BarArea \cdot \frac{b}{Spacing}$ $\quad A_s = 0.31\ in^2$

Reinforcing ratio: $\rho := \frac{A_s}{b \cdot d}$ $\quad \rho = 0.0065$

Compression block depth:

$$a := \frac{A_s \cdot f_y}{0.85 \cdot f_{c\_p} \cdot b} \qquad a = 0.456\ in$$

Moment capacity:

$$\phi M_n := \phi_b \cdot \left(A_s \cdot f_y \cdot \left(d - \frac{a}{2}\right)\right) \qquad \phi M_n = 5.3\ ft \cdot kips$$

Shear design:

Area of shear reinforcing: $A_v := 0 \cdot in^2$

Spacing of stirrups: $s := 12 \cdot in$

Concrete shear capacity:

$$V_c := 2 \cdot \sqrt{f_{c\_p} \cdot psi} \cdot b \cdot d \qquad V_c = 6.1\ kips$$

Steel shear capacity: $V_s := \frac{A_v \cdot f_y \cdot d}{s}$

$V_s = 0\ kips$

Shear capacity:

$$\phi V_n := \phi_v \cdot \left(V_c + V_s\right) \qquad \phi V_n = 4.6\ kips$$

$M_u < \phi M_n = 1$ $\quad \rho < \rho_{max} = 1$

$V_u < \phi V_n = 1$ $\quad z = 180\ \frac{kips}{in}$

Reinforced concrete retaining wall footing design:

Loads and geometry:

Factored moment: $M_u := 1.6 \cdot M_{footing}$

$M_u = 2.822\ ft \cdot kips$

Slab strip width: $b := 12 \cdot in$

Live to dead load ratio: $LLDLRatio := 3.5$

Wall thickness: $h := t_{ftg}$

Cover to reinforcing: $d_{cg} := 3.25 \cdot in$

Depth to reinforcing: $d := h - d_{cg}$ $\quad d = 8.75\ in$

Material properties / Design parameters:

Strength reduction factors: Bending: $\phi_b := 0.9$

Shear: $\phi_v := 0.85$

Concrete compressive strength: $f_{c\_p} := 4 \cdot ksi$

Steel yield strength: $f_y := 60 \cdot ksi$

Whitney stress block depth ratio:

$$\beta_1 := \begin{cases} 0.85 & \text{if } f_{c\_p} \le 4 \cdot ksi \\ \left(0.85 - 0.05 \cdot \left(f_{c\_p} \cdot ksi^{-1} - 4\right)\right) & \text{else} \end{cases}$$

Minimum flexural reinforcing:

$\rho_{min} := 200 \cdot f_y^{-1} \cdot psi$ $\quad \rho_{min} = 0.0033$

Maximum flexural reinforcing:

$$\rho_{max} := 0.75 \cdot \left(\frac{0.85 \cdot \beta_1 \cdot f_{c\_p}}{f_y} \cdot \frac{87 \cdot ksi}{87 \cdot ksi + f_y}\right)$$

$\rho_{max} = 0.0214$

Flexural design:

Required area of reinforcing: $A_{s\_reqd} = 0.07\ in^2$

Area of flexural reinforcing:

$BarArea := 0.31 \cdot in^2$

$Spacing := 12 \cdot in$ $\quad A_s := BarArea \cdot \frac{b}{Spacing}$ $\quad A_s = 0.31\ in^2$

Reinforcing ratio: $\rho := \frac{A_s}{b \cdot d}$ $\quad \rho = 0.003$

Compression block depth:

$a := \frac{A_s \cdot f_y}{0.85 \cdot f_{c\_p} \cdot b}$ $\quad a = 0.456\ in$

Moment capacity:

$\phi M_n := \phi_b \cdot \left(A_s \cdot f_y \cdot \left(d - \frac{a}{2}\right)\right)$ $\quad \phi M_n = 11.9\ ft \cdot kips$

$M_u < \phi M_n = 1$ $\quad \rho < \rho_{max} = 1$

$V_u < \phi V_n = 1$ $\quad z = 52\ \frac{kips}{in}$

Sheet No.:_____

Project: St. Helens - Riverwalk - Retaining Wall
Project No.: 20028
Client:
Subject:

Engineer: SC
File: Ret-Wall_7.5-ft.mcdx
Date:
Rev.:

Retaining wall analysis and design

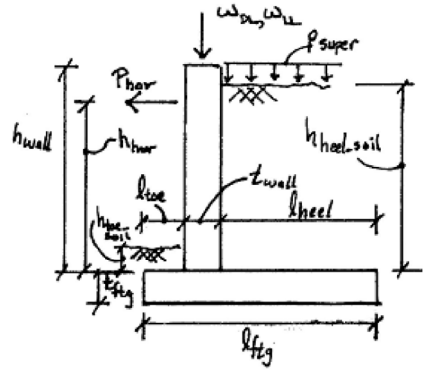

Material properties:

$\gamma_{conc} := 150 \cdot pcf$

$\gamma_{soil} := 120 \cdot pcf$

$\gamma_{EFP\_a} := 35 \cdot pcf$

$\gamma_{EFP\_p} := 250 \cdot pcf$

$\mu_{sliding} := .40$

$q_{all\_brg} := 2000 \cdot psf$

$FS := 1.5$

Loading on wall:

$h_{heel\_soil} := 7 \cdot ft + 6 \cdot in$

$h_{toe\_soil} := 12 \cdot in$

$p_{super} := 100.0 \cdot psf$

$\omega_{DL\_super} := 0.0 \cdot klf$

$\omega_{LL\_super} := 0.0 \cdot klf$

$P_{hor} := 0.0 \cdot kips$

$h_{hor} := 0 \cdot ft$

Wall geometry:

$h_{wall} := 7 \cdot ft + 6 \cdot in$

$t_{wall} := 8 \cdot in$

$p_{wall} := 100 \cdot psf$

$h_{key} := 0 \cdot in$

$l_{key} := 0 \cdot in$

$t_{ftg} := 1 \cdot ft + 0 \cdot in$

$l_{toe} := 1 \cdot ft + 0 \cdot in$

$l_{ftg} := 5 \cdot ft + 0 \cdot in$

$l_{heel} := l_{ftg} - l_{toe} - t_{wall}$

$l_{heel} = 3.333\ ft$

$b_{nom} := 1 \cdot ft$

$\omega_1 := \omega_{DL\_super} + \omega_{LL\_super}$ $\qquad \omega_1 = 0\ \frac{kips}{ft}$

$P_{ftg} := \gamma_{conc} \cdot (l_{ftg} \cdot t_{ftg} + l_{key} \cdot h_{key}) \cdot b_{nom}$ $\qquad P_{ftg} = 0.75\ kips$

$P_{wall} := p_{wall} \cdot h_{wall} \cdot b_{nom}$ $\qquad P_{wall} = 0.75\ kips$

$P_{heel\_soil} := (\gamma_{soil} \cdot h_{heel\_soil} + p_{super}) \cdot l_{heel} \cdot b_{nom}$ $\qquad P_{heel\_soil} = 3.333\ kips$

$P_{toe\_soil} := \gamma_{soil} \cdot h_{toe\_soil} \cdot l_{toe} \cdot b_{nom}$ $\qquad P_{toe\_soil} = 0.12\ kips$

$P_{total} := P_{ftg} + P_{wall} + P_{heel\_soil} + P_{toe\_soil} + \omega_1 \cdot b_{nom}$ $\qquad P_{total} = 4.953\ kips$

$$M_{OT} := \left(\frac{1}{2} \cdot \gamma_{EFP\_a} \cdot b_{nom} \cdot (h_{heel\_soil} + t_{ftg})^2 \cdot \left(\frac{t_{ftg} + h_{heel\_soil}}{3} \right) + p_{super} \cdot \frac{\gamma_{EFP\_a}}{\gamma_{soil}} \cdot (h_{heel\_soil} + t_{ftg}) \cdot b_{nom} \cdot \left(\frac{t_{ftg} + h_{heel\_soil}}{2} \right) + P_{hor} \cdot (t_{ftg} + h_{hor}) \right) \cdot FS$$

$M_{OT} = 6.954\ ft \cdot kips$

$$M_{OT\_resisting} := P_{ftg} \cdot \frac{l_{ftg}}{2} + P_{wall} \cdot \left(l_{toe} + \frac{t_{wall}}{2} \right) + \omega_1 \cdot b_{nom} \cdot \left(l_{toe} + \frac{t_{wall}}{2} \right) + P_{heel\_soil} \cdot \left(l_{ftg} - \frac{l_{heel}}{2} \right) + P_{toe\_soil} \cdot \frac{l_{toe}}{2}$$

$M_{OT\_resisting} = 14.046\ ft \cdot kips$

$$H_{sliding} := \left(\frac{1}{2} \cdot \gamma_{EFP\_a} \cdot b_{nom} \cdot \left(h_{heel\_soil} + h_{key} + t_{ftg}\right)^2 + p_{super} \cdot \frac{\gamma_{EFP\_a}}{\gamma_{soil}} \cdot b_{nom} \cdot \left(h_{heel\_soil} + h_{key} + t_{ftg}\right) + P_{hor} \right) \cdot FS$$

$H_{sliding} = 2.268\ kips$

$$H_{resisting} := \left(P_{ftg} + P_{wall} + P_{heel\_soil} + 0 \cdot P_{toe\_soil} + \omega_1 \cdot b_{nom}\right) \cdot \mu_{sliding} + \frac{1}{2} \cdot \gamma_{EFP\_p} \cdot b_{nom} \cdot \left(\left(h_{toe\_soil} + t_{ftg} + h_{key}\right)^2 - h_{toe\_soil}^{\ 2}\right)$$

$H_{resisting} = 2.308\ kips$

<u>Soil pressures due to gravity and overturning forces:</u>

Footing size: $B_1 := b_{nom}$ $\quad B_1 = 1\ ft$

$B_2 := l_{ftg}$ $\quad B_2 = 5\ ft$

$A := B_1 \cdot B_2$ $\quad A = 5\ ft^2$

Moment at mid-width of footing:

$$M := \left(\begin{array}{l} \frac{1}{2} \cdot \gamma_{EFP\_a} \cdot b_{nom} \cdot \left(h_{heel\_soil}\right)^2 \cdot \left(\frac{h_{heel\_soil}}{3}\right) \\ + p_{super} \cdot \frac{\gamma_{EFP\_a}}{\gamma_{soil}} \cdot \left(h_{heel\_soil}\right) \cdot b_{nom} \cdot \left(\frac{h_{heel\_soil}}{2}\right) \\ + \frac{0 \cdot -1}{2} \cdot \gamma_{EFP\_p} \cdot b_{nom} \cdot \left(h_{toe\_soil} + t_{ftg}\right)^2 \cdot \left(\frac{h_{toe\_soil}}{3}\right) \\ + P_{hor} \cdot \left(t_{ftg} + h_{hor}\right) + P_{toe\_soil} \cdot \left(\frac{l_{ftg}}{2} - \frac{l_{toe}}{2}\right) + \left(P_{wall} + \omega_1 \cdot b_{nom}\right) \cdot \left(\frac{l_{ftg}}{2} - l_{toe} - \frac{t_{wall}}{2}\right) \\ + -P_{heel\_soil} \cdot \left(\frac{l_{ftg}}{2} - \frac{l_{heel}}{2}\right) \end{array} \right)$$

$M = 1.618\ ft \cdot kips$

Eccentricity of soil pressure resultant:

$$e := \frac{M}{P_{total}}$$

$e = 0.327\ ft$ $\quad \frac{B_2}{6} = 0.833\ ft$

Maximum soil pressures:

$$q_{max\_prime} := \begin{cases} \left(\frac{P_{total}}{A} \cdot \left(1 + \frac{6 \cdot e}{B_2}\right)\right) & \text{if } e \le \frac{B_2}{6} \\ \frac{2 \cdot P_{total}}{3 \cdot A \cdot \left(0.5 - \frac{e}{B_2}\right)} & \text{else} \end{cases}$$

$q_{max\_prime} = 1379\ psf$

$q_{max\_prime} < q_{all\_brg} = 1$

$$q_{min\_prime} := \begin{cases} \left(\frac{P_{total}}{A} \cdot \left(1 - \frac{6 \cdot e}{B_2}\right)\right) & \text{if } e \le \frac{B_2}{6} \\ 0 \cdot psf & \text{else} \end{cases}$$

$q_{min\_prime} = 602\ psf$

Forces in wall at the base of wall:

$$M_{wall} := \left(\frac{1}{2} \cdot \gamma_{EFP\_a} \cdot b_{nom} \cdot \left(h_{heel\_soil}\right)^2 \cdot \frac{h_{heel\_soil}}{3} + p_{super} \cdot \frac{\gamma_{EFP\_a}}{\gamma_{soil}} \cdot \left(h_{heel\_soil}\right) \cdot b_{nom} \cdot \left(\frac{h_{heel\_soil}}{2}\right) + P_{hor} \cdot \left(h_{hor}\right)\right)$$

$$V_{wall} := \left(\frac{1}{2} \cdot \gamma_{EFP\_a} \cdot b_{nom} \cdot \left(h_{heel\_soil}\right)^2 + p_{super} \cdot \frac{\gamma_{EFP\_a}}{\gamma_{soil}} \cdot \left(h_{heel\_soil}\right) \cdot b_{nom} + P_{hor}\right)$$

$1.6 \cdot M_{wall} = 5.25\ ft \cdot kips$

$1.6 \cdot V_{wall} = 1.925\ kips$

$$M_{footing} := P_{heel\_soil} \cdot \frac{l_{heel}}{2} + p_{super} \cdot b_{nom} \cdot \frac{l_{heel}^2}{2}$$

$M_{footing} = 6.111\ ft \cdot kips$

$1.6 \cdot M_{footing} = 9.778\ ft \cdot kips$

Reinforced concrete retaining wall design:

Loads and geometry:

Factored moment: $M_u := 1.6 \cdot M_{wall}$ $\quad M_u = 5.3\ ft \cdot kips$

Factored shear force: $V_u := 1.6 \cdot V_{wall}$ $\quad V_u = 1.9\ kips$

Slab strip width: $b := b_{nom}$

Wall thickness: $h := t_{wall}$

Cover to reinforcing: $d_{cg} := 4 \cdot in$

Depth to reinforcing: $d := h - d_{cg}$ $\quad d = 4\ in$

Material properties / Design parameters:

Strength reduction factors: Bending: $\phi_b := 0.9$

Shear: $\phi_v := 0.75$

Concrete compressive strength: $f_{c\_p} := 4 \cdot ksi$

Steel yield strength: $f_y := 60 \cdot ksi$

Whitney stress block depth ratio:

$$\beta_1 := \begin{cases} 0.85 & \text{if } f_{c\_p} \le 4 \cdot ksi \\ \left(0.85 - 0.05 \cdot \left(f_{c\_p} \cdot ksi^{-1} - 4\right)\right) & \text{else} \end{cases}$$

Minimum flexural reinforcing:

$\rho_{min} := 200 \cdot f_y^{-1} \cdot psi$ $\quad \rho_{min} = 0.0033$

Maximum flexural reinforcing:

$$\rho_{max} := 0.75 \cdot \left(\frac{0.85 \cdot \beta_1 \cdot f_{c\_p}}{f_y} \cdot \frac{87 \cdot ksi}{87 \cdot ksi + f_y}\right)$$

$$\rho_{max} = 0.0214$$

Flexural design:

Required area of reinforcing: $A_{s\_reqd} = 0.31\ in^2$

Area of flexural reinforcing:

$BarArea := 0.31 \cdot in^2$

$Spacing := 8 \cdot in$ $\quad A_s := BarArea \cdot \frac{b}{Spacing}$ $\quad A_s = 0.465\ in^2$

Reinforcing ratio: $\rho := \frac{A_s}{b \cdot d}$ $\quad \rho = 0.0097$

Compression block depth:

$$a := \frac{A_s \cdot f_y}{0.85 \cdot f_{c\_p} \cdot b} \qquad a = 0.684\ in$$

Moment capacity:

$$\phi M_n := \phi_b \cdot \left(A_s \cdot f_y \cdot \left(d - \frac{a}{2}\right)\right) \qquad \phi M_n = 7.7\ ft \cdot kips$$

Shear design:

Area of shear reinforcing: $A_v := 0 \cdot in^2$

Spacing of stirrups: $s := 12 \cdot in$

Concrete shear capacity:

$$V_c := 2 \cdot \sqrt{f_{c\_p} \cdot psi} \cdot b \cdot d \qquad V_c = 6.1\ kips$$

Steel shear capacity: $V_s := \frac{A_v \cdot f_y \cdot d}{s}$

$V_s = 0\ kips$

Shear capacity:

$$\phi V_n := \phi_v \cdot \left(V_c + V_s\right) \qquad \phi V_n = 4.6\ kips$$

$M_u < \phi M_n = 1$ $\quad \rho < \rho_{max} = 1$

$V_u < \phi V_n = 1$ $\quad z = 173\ \frac{kips}{in}$

Reinforced concrete retaining wall footing design:

Loads and geometry:

Factored moment: $M_u := 1.6 \cdot M_{footing}$

$M_u = 9.778\ ft \cdot kips$

Slab strip width: $b := 12 \cdot in$

Live to dead load ratio: $LLDLRatio := 3.5$

Wall thickness: $h := t_{ftg}$

Cover to reinforcing: $d_{cg} := 3.25 \cdot in$

Depth to reinforcing: $d := h - d_{cg}$ $\quad d = 8.75\ in$

Material properties / Design parameters:

Strength reduction factors: Bending: $\phi_b := 0.9$

Shear: $\phi_v := 0.85$

Concrete compressive strength: $f_{c\_p} := 4 \cdot ksi$

Steel yield strength: $f_y := 60 \cdot ksi$

Whitney stress block depth ratio:

$$\beta_1 := \begin{cases} 0.85 & \text{if } f_{c\_p} \le 4 \cdot ksi \\ \left(0.85 - 0.05 \cdot \left(f_{c\_p} \cdot ksi^{-1} - 4\right)\right) & \text{else} \end{cases}$$

Minimum flexural reinforcing:

$\rho_{min} := 200 \cdot f_y^{-1} \cdot psi$ $\quad \rho_{min} = 0.0033$

Maximum flexural reinforcing:

$$\rho_{max} := 0.75 \cdot \left(\frac{0.85 \cdot \beta_1 \cdot f_{c\_p}}{f_y} \cdot \frac{87 \cdot ksi}{87 \cdot ksi + f_y}\right)$$

$\rho_{max} = 0.0214$

Flexural design:

Required area of reinforcing: $A_{s\_reqd} = 0.25\ in^2$

Area of flexural reinforcing:

$BarArea := 0.31 \cdot in^2$

$Spacing := 12 \cdot in$ $\quad A_s := BarArea \cdot \frac{b}{Spacing}$ $\quad A_s = 0.31\ in^2$

Reinforcing ratio: $\rho := \frac{A_s}{b \cdot d}$ $\quad \rho = 0.003$

Compression block depth:

$a := \frac{A_s \cdot f_y}{0.85 \cdot f_{c\_p} \cdot b}$ $\quad a = 0.456\ in$

Moment capacity:

$\phi M_n := \phi_b \cdot \left(A_s \cdot f_y \cdot \left(d - \frac{a}{2}\right)\right)$ $\quad \phi M_n = 11.9\ ft \cdot kips$

$M_u < \phi M_n = 1$ $\quad \rho < \rho_{max} = 1$

$V_u < \phi V_n = 1$ $\quad z = 179\ \frac{kips}{in}$

Project: St. Helens - Riverwalk - Retaining Wall
Project No.: 20028
Client:
Subject:

Engineer: SC
File: Ret-Wall_7.5-ft_EQ.mcdx
Date:
Rev.:

Retaining wall analysis and design

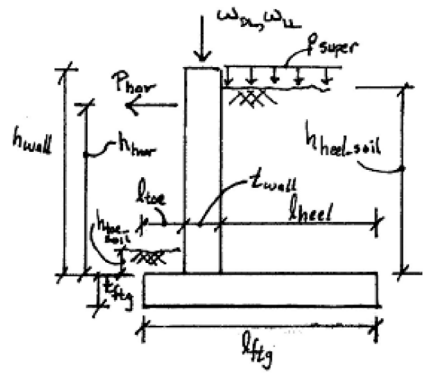

Material properties:

$\gamma_{conc} := 135 \cdot pcf$

$\gamma_{soil} := 108 \cdot pcf$

$\gamma_{EFP\_a} := 35 \cdot pcf$

$\gamma_{EFP\_p} := 250 \cdot pcf$

$\mu_{sliding} := .40$

$q_{all\_brg} := 3000 \cdot psf$

$FS := 1.1$

Loading on wall:

$h_{heel\_soil} := 7 \cdot ft + 6 \cdot in$

$h_{toe\_soil} := 12 \cdot in$

$p_{super} := 0.0 \cdot psf$

$\omega_{DL\_super} := 0.0 \cdot klf$

$\omega_{LL\_super} := 0.0 \cdot klf$

$P_{hor} := 0.394 \cdot kips$

$h_{hor} := 4.50 \cdot ft$

Wall geometry:

$h_{wall} := 7 \cdot ft + 6 \cdot in$

$t_{wall} := 8 \cdot in$

$p_{wall} := 90 \cdot psf$

$h_{key} := 0 \cdot in$

$l_{key} := 0 \cdot in$

$t_{ftg} := 1 \cdot ft + 0 \cdot in$

$l_{toe} := 1 \cdot ft + 0 \cdot in$

$l_{ftg} := 5 \cdot ft + 0 \cdot in$

$l_{heel} := l_{ftg} - l_{toe} - t_{wall}$

$l_{heel} = 3.333\ ft$

$b_{nom} := 1 \cdot ft$

$\omega_1 := \omega_{DL\_super} + \omega_{LL\_super}$ $\qquad \omega_1 = 0\ \frac{kips}{ft}$

$P_{ftg} := \gamma_{conc} \cdot (l_{ftg} \cdot t_{ftg} + l_{key} \cdot h_{key}) \cdot b_{nom}$ $\qquad P_{ftg} = 0.675\ kips$

$P_{wall} := p_{wall} \cdot h_{wall} \cdot b_{nom}$ $\qquad P_{wall} = 0.675\ kips$

$P_{heel\_soil} := (\gamma_{soil} \cdot h_{heel\_soil} + p_{super}) \cdot l_{heel} \cdot b_{nom}$ $\qquad P_{heel\_soil} = 2.7\ kips$

$P_{toe\_soil} := \gamma_{soil} \cdot h_{toe\_soil} \cdot l_{toe} \cdot b_{nom}$ $\qquad P_{toe\_soil} = 0.108\ kips$

$P_{total} := P_{ftg} + P_{wall} + P_{heel\_soil} + P_{toe\_soil} + \omega_1 \cdot b_{nom}$ $\qquad P_{total} = 4.158\ kips$

$$M_{OT} := \left(\frac{1}{2} \cdot \gamma_{EFP\_a} \cdot b_{nom} \cdot (h_{heel\_soil} + t_{ftg})^2 \cdot \left(\frac{t_{ftg} + h_{heel\_soil}}{3} \right) + p_{super} \cdot \frac{\gamma_{EFP\_a}}{\gamma_{soil}} \cdot (h_{heel\_soil} + t_{ftg}) \cdot b_{nom} \cdot \left(\frac{t_{ftg} + h_{heel\_soil}}{2} \right) + P_{hor} \cdot (t_{ftg} + h_{hor}) \right) \cdot FS$$

$M_{OT} = 6.324\ ft \cdot kips$

$$M_{OT\_resisting} := P_{ftg} \cdot \frac{l_{ftg}}{2} + P_{wall} \cdot \left(l_{toe} + \frac{t_{wall}}{2} \right) + \omega_1 \cdot b_{nom} \cdot \left(l_{toe} + \frac{t_{wall}}{2} \right) + P_{heel\_soil} \cdot \left(l_{ftg} - \frac{l_{heel}}{2} \right) + P_{toe\_soil} \cdot \frac{l_{toe}}{2}$$

$M_{OT\_resisting} = 11.642\ ft \cdot kips$

$$H_{sliding} := \left(\frac{1}{2} \cdot \gamma_{EFP\_a} \cdot b_{nom} \cdot \left(h_{heel\_soil} + h_{key} + t_{ftg}\right)^2 + p_{super} \cdot \frac{\gamma_{EFP\_a}}{\gamma_{soil}} \cdot b_{nom} \cdot \left(h_{heel\_soil} + h_{key} + t_{ftg}\right) + P_{hor} \right) \cdot FS$$

$H_{sliding} = 1.824\ kips$

$$H_{resisting} := \left(P_{ftg} + P_{wall} + P_{heel\_soil} + 0 \cdot P_{toe\_soil} + \omega_1 \cdot b_{nom}\right) \cdot \mu_{sliding} + \frac{1}{2} \cdot \gamma_{EFP\_p} \cdot b_{nom} \cdot \left(\left(h_{toe\_soil} + t_{ftg} + h_{key}\right)^2 - h_{toe\_soil}^{\ 2}\right)$$

$H_{resisting} = 1.995\ kips$

<u>Soil pressures due to gravity and overturning forces:</u>

Footing size: $B_1 := b_{nom}$ $\quad B_1 = 1\ ft$

$B_2 := l_{ftg}$ $\quad B_2 = 5\ ft$

$A := B_1 \cdot B_2$ $\quad A = 5\ ft^2$

Moment at mid-width of footing:

$$M := \left(\begin{array}{l} \frac{1}{2} \cdot \gamma_{EFP\_a} \cdot b_{nom} \cdot \left(h_{heel\_soil}\right)^2 \cdot \left(\frac{h_{heel\_soil}}{3}\right) \\ + p_{super} \cdot \frac{\gamma_{EFP\_a}}{\gamma_{soil}} \cdot \left(h_{heel\_soil}\right) \cdot b_{nom} \cdot \left(\frac{h_{heel\_soil}}{2}\right) \\ + \frac{0 \cdot -1}{2} \cdot \gamma_{EFP\_p} \cdot b_{nom} \cdot \left(h_{toe\_soil} + t_{ftg}\right)^2 \cdot \left(\frac{h_{toe\_soil}}{3}\right) \\ + P_{hor} \cdot \left(t_{ftg} + h_{hor}\right) + P_{toe\_soil} \cdot \left(\frac{l_{ftg}}{2} - \frac{l_{toe}}{2}\right) + \left(P_{wall} + \omega_1 \cdot b_{nom}\right) \cdot \left(\frac{l_{ftg}}{2} - l_{toe} - \frac{t_{wall}}{2}\right) \\ + -P_{heel\_soil} \cdot \left(\frac{l_{ftg}}{2} - \frac{l_{heel}}{2}\right) \end{array} \right)$$

$M = 3.381\ ft \cdot kips$

Eccentricity of soil pressure resultant:

$$e := \frac{M}{P_{total}}$$

$e = 0.813\ ft$ $\quad \frac{B_2}{6} = 0.833\ ft$

Maximum soil pressures:

$$q_{max\_prime} := \begin{cases} \left(\frac{P_{total}}{A} \cdot \left(1 + \frac{6 \cdot e}{B_2}\right)\right) & \text{if } e \le \frac{B_2}{6} \\ \frac{2 \cdot P_{total}}{3 \cdot A \cdot \left(0.5 - \frac{e}{B_2}\right)} & \text{else} \end{cases}$$

$q_{max\_prime} = 1643\ psf$

$q_{max\_prime} < q_{all\_brg} = 1$

$$q_{min\_prime} := \begin{cases} \left(\frac{P_{total}}{A} \cdot \left(1 - \frac{6 \cdot e}{B_2}\right)\right) & \text{if } e \le \frac{B_2}{6} \\ 0 \cdot psf & \text{else} \end{cases}$$

$q_{min\_prime} = 20\ psf$

<u>Forces in wall at the base of wall:</u>

$$M_{wall} := \left(\frac{1}{2} \cdot \gamma_{EFP\_a} \cdot b_{nom} \cdot \left(h_{heel\_soil}\right)^2 \cdot \frac{h_{heel\_soil}}{3} + p_{super} \cdot \frac{\gamma_{EFP\_a}}{\gamma_{soil}} \cdot \left(h_{heel\_soil}\right) \cdot b_{nom} \cdot \left(\frac{h_{heel\_soil}}{2}\right) + P_{hor} \cdot \left(h_{hor}\right)\right)$$

$$V_{wall} := \left(\frac{1}{2} \cdot \gamma_{EFP\_a} \cdot b_{nom} \cdot \left(h_{heel\_soil}\right)^2 + p_{super} \cdot \frac{\gamma_{EFP\_a}}{\gamma_{soil}} \cdot \left(h_{heel\_soil}\right) \cdot b_{nom} + P_{hor}\right)$$

$1.6 \cdot M_{wall} = 6.774\ ft \cdot kips$

$1.6 \cdot V_{wall} = 2.205\ kips$

$$M_{footing} := P_{heel\_soil} \cdot \frac{l_{heel}}{2} + p_{super} \cdot b_{nom} \cdot \frac{l_{heel}^2}{2}$$

$M_{footing} = 4.5\ ft \cdot kips$

$1.6 \cdot M_{footing} = 7.2\ ft \cdot kips$

Reinforced concrete retaining wall design:

Loads and geometry:

Factored moment: $M_u := 1.6 \cdot M_{wall}$ $\quad M_u = 6.8\ ft \cdot kips$

Factored shear force: $V_u := 1.6 \cdot V_{wall}$ $\quad V_u = 2.2\ kips$

Slab strip width: $b := b_{nom}$

Wall thickness: $h := t_{wall}$

Cover to reinforcing: $d_{cg} := 4 \cdot in$

Depth to reinforcing: $d := h - d_{cg}$ $\quad d = 4\ in$

Material properties / Design parameters:

Strength reduction factors: Bending: $\phi_b := 0.9$

Shear: $\phi_v := 0.75$

Concrete compressive strength: $f_{c\_p} := 4 \cdot ksi$

Steel yield strength: $f_y := 60 \cdot ksi$

Whitney stress block depth ratio:

$$\beta_1 := \begin{cases} 0.85 & \text{if } f_{c\_p} \le 4 \cdot ksi \\ \left(0.85 - 0.05 \cdot \left(f_{c\_p} \cdot ksi^{-1} - 4\right)\right) & \text{else} \end{cases}$$

Minimum flexural reinforcing:

$\rho_{min} := 200 \cdot f_y^{-1} \cdot psi$ $\quad \rho_{min} = 0.0033$

Maximum flexural reinforcing:

$$\rho_{max} := 0.75 \cdot \left(\frac{0.85 \cdot \beta_1 \cdot f_{c\_p}}{f_y} \cdot \frac{87 \cdot ksi}{87 \cdot ksi + f_y}\right)$$

$$\rho_{max} = 0.0214$$

Flexural design:

Required area of reinforcing: $A_{s\_reqd} = 0.41\ in^2$

Area of flexural reinforcing:

$BarArea := 0.31 \cdot in^2$

$Spacing := 8 \cdot in$ $\quad A_s := BarArea \cdot \frac{b}{Spacing}$ $\quad A_s = 0.465\ in^2$

Reinforcing ratio: $\rho := \frac{A_s}{b \cdot d}$ $\quad \rho = 0.0097$

Compression block depth:

$$a := \frac{A_s \cdot f_y}{0.85 \cdot f_{c\_p} \cdot b} \qquad a = 0.684\ in$$

Moment capacity:

$$\phi M_n := \phi_b \cdot \left(A_s \cdot f_y \cdot \left(d - \frac{a}{2}\right)\right) \qquad \phi M_n = 7.7\ ft \cdot kips$$

Shear design:

Area of shear reinforcing: $A_v := 0 \cdot in^2$

Spacing of stirrups: $s := 12 \cdot in$

Concrete shear capacity:

$$V_c := 2 \cdot \sqrt{f_{c\_p} \cdot psi} \cdot b \cdot d \qquad V_c = 6.1\ kips$$

Steel shear capacity: $V_s := \frac{A_v \cdot f_y \cdot d}{s}$

$V_s = 0\ kips$

Shear capacity:

$$\phi V_n := \phi_v \cdot \left(V_c + V_s\right) \qquad \phi V_n = 4.6\ kips$$

$M_u < \phi M_n = 1$ $\quad \rho < \rho_{max} = 1$

$V_u < \phi V_n = 1$ $\quad z = 223\ \frac{kips}{in}$

Reinforced concrete retaining wall footing design:

Loads and geometry:

Factored moment: $M_u := 1.6 \cdot M_{footing}$

$M_u = 7.2\ ft \cdot kips$

Slab strip width: $b := 12 \cdot in$

Live to dead load ratio: $LLDLRatio := 3.5$

Wall thickness: $h := t_{ftg}$

Cover to reinforcing: $d_{cg} := 3.25 \cdot in$

Depth to reinforcing: $d := h - d_{cg}$ $\quad d = 8.75\ in$

Material properties / Design parameters:

Strength reduction factors: Bending: $\phi_b := 0.9$

Shear: $\phi_v := 0.85$

Concrete compressive strength: $f_{c\_p} := 4 \cdot ksi$

Steel yield strength: $f_y := 60 \cdot ksi$

Whitney stress block depth ratio:

$$\beta_1 := \begin{cases} 0.85 & \text{if } f_{c\_p} \le 4 \cdot ksi \\ \left(0.85 - 0.05 \cdot \left(f_{c\_p} \cdot ksi^{-1} - 4\right)\right) & \text{else} \end{cases}$$

Minimum flexural reinforcing:

$\rho_{min} := 200 \cdot f_y^{-1} \cdot psi$ $\quad \rho_{min} = 0.0033$

Maximum flexural reinforcing:

$$\rho_{max} := 0.75 \cdot \left(\frac{0.85 \cdot \beta_1 \cdot f_{c\_p}}{f_y} \cdot \frac{87 \cdot ksi}{87 \cdot ksi + f_y}\right)$$

$\rho_{max} = 0.0214$

Flexural design:

Required area of reinforcing: $A_{s\_reqd} = 0.19\ in^2$

Area of flexural reinforcing:

$BarArea := 0.31 \cdot in^2$

$Spacing := 12 \cdot in$ $\quad A_s := BarArea \cdot \frac{b}{Spacing}$ $\quad A_s = 0.31\ in^2$

Reinforcing ratio: $\rho := \frac{A_s}{b \cdot d}$ $\quad \rho = 0.003$

Compression block depth:

$a := \frac{A_s \cdot f_y}{0.85 \cdot f_{c\_p} \cdot b}$ $\quad a = 0.456\ in$

Moment capacity:

$\phi M_n := \phi_b \cdot \left(A_s \cdot f_y \cdot \left(d - \frac{a}{2}\right)\right)$ $\quad \phi M_n = 11.9\ ft \cdot kips$

$M_u < \phi M_n = 1$ $\quad \rho < \rho_{max} = 1$

$V_u < \phi V_n = 1$ $\quad z = 132\ \frac{kips}{in}$

Sheet No.:_____

Project: St. Helens - Riverwalk - Retaining Wall
Project No.: 20028
Client:
Subject:

Engineer: SC
File: Ret-Wall_9.5-ft.mcdx
Date:
Rev.:

Retaining wall analysis and design

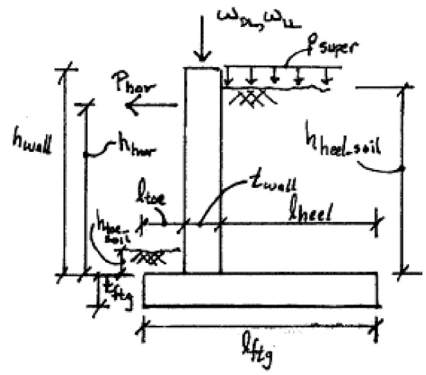

Material properties:

$\gamma_{conc} := 150 \cdot pcf$

$\gamma_{soil} := 120 \cdot pcf$

$\gamma_{EFP\_a} := 35 \cdot pcf$

$\gamma_{EFP\_p} := 250 \cdot pcf$

$\mu_{sliding} := .40$

$q_{all\_brg} := 2000 \cdot psf$

$FS := 1.5$

Loading on wall:

$h_{heel\_soil} := 9 \cdot ft + 6 \cdot in$

$h_{toe\_soil} := 12 \cdot in$

$p_{super} := 100.0 \cdot psf$

$\omega_{DL\_super} := 0.0 \cdot klf$

$\omega_{LL\_super} := 0.0 \cdot klf$

$P_{hor} := 0.0 \cdot kips$

$h_{hor} := 0 \cdot ft$

Wall geometry:

$h_{wall} := 9 \cdot ft + 6 \cdot in$

$t_{wall} := 8 \cdot in$

$p_{wall} := 100 \cdot psf$

$h_{key} := 0 \cdot in$

$l_{key} := 0 \cdot in$

$t_{ftg} := 1 \cdot ft + 0 \cdot in$

$l_{toe} := 1 \cdot ft + 0 \cdot in$

$l_{ftg} := 6 \cdot ft + 4 \cdot in$

$l_{heel} := l_{ftg} - l_{toe} - t_{wall}$

$l_{heel} = 4.667\ ft$

$b_{nom} := 1 \cdot ft$

$\omega_1 := \omega_{DL\_super} + \omega_{LL\_super}$ $\qquad \omega_1 = 0\ \frac{kips}{ft}$

$P_{ftg} := \gamma_{conc} \cdot (l_{ftg} \cdot t_{ftg} + l_{key} \cdot h_{key}) \cdot b_{nom}$ $\qquad P_{ftg} = 0.95\ kips$

$P_{wall} := p_{wall} \cdot h_{wall} \cdot b_{nom}$ $\qquad P_{wall} = 0.95\ kips$

$P_{heel\_soil} := (\gamma_{soil} \cdot h_{heel\_soil} + p_{super}) \cdot l_{heel} \cdot b_{nom}$ $\qquad P_{heel\_soil} = 5.787\ kips$

$P_{toe\_soil} := \gamma_{soil} \cdot h_{toe\_soil} \cdot l_{toe} \cdot b_{nom}$ $\qquad P_{toe\_soil} = 0.12\ kips$

$P_{total} := P_{ftg} + P_{wall} + P_{heel\_soil} + P_{toe\_soil} + \omega_1 \cdot b_{nom}$ $\qquad P_{total} = 7.807\ kips$

$$M_{OT} := \left(\frac{1}{2} \cdot \gamma_{EFP\_a} \cdot b_{nom} \cdot (h_{heel\_soil} + t_{ftg})^2 \cdot \left(\frac{t_{ftg} + h_{heel\_soil}}{3} \right) + p_{super} \cdot \frac{\gamma_{EFP\_a}}{\gamma_{soil}} \cdot (h_{heel\_soil} + t_{ftg}) \cdot b_{nom} \cdot \left(\frac{t_{ftg} + h_{heel\_soil}}{2} \right) + P_{hor} \cdot (t_{ftg} + h_{hor}) \right) \cdot FS$$

$M_{OT} = 12.541\ ft \cdot kips$

$$M_{OT\_resisting} := P_{ftg} \cdot \frac{l_{ftg}}{2} + P_{wall} \cdot \left(l_{toe} + \frac{t_{wall}}{2} \right) + \omega_1 \cdot b_{nom} \cdot \left(l_{toe} + \frac{t_{wall}}{2} \right) + P_{heel\_soil} \cdot \left(l_{ftg} - \frac{l_{heel}}{2} \right) + P_{toe\_soil} \cdot \frac{l_{toe}}{2}$$

$M_{OT\_resisting} = 27.482\ ft \cdot kips$

$$H_{sliding} := \left(\frac{1}{2} \cdot \gamma_{EFP\_a} \cdot b_{nom} \cdot \left(h_{heel\_soil} + h_{key} + t_{ftg}\right)^2 + p_{super} \cdot \frac{\gamma_{EFP\_a}}{\gamma_{soil}} \cdot b_{nom} \cdot \left(h_{heel\_soil} + h_{key} + t_{ftg}\right) + P_{hor} \right) \cdot FS$$

$H_{sliding} = 3.353\ kips$

$$H_{resisting} := \left(P_{ftg} + P_{wall} + P_{heel\_soil} + 0 \cdot P_{toe\_soil} + \omega_1 \cdot b_{nom}\right) \cdot \mu_{sliding} + \frac{1}{2} \cdot \gamma_{EFP\_p} \cdot b_{nom} \cdot \left(\left(h_{toe\_soil} + t_{ftg} + h_{key}\right)^2 - h_{toe\_soil}^{\ 2}\right)$$

$H_{resisting} = 3.45\ kips$

<u>Soil pressures due to gravity and overturning forces:</u>

Footing size: $B_1 := b_{nom}$ $\quad B_1 = 1\ ft$

$B_2 := l_{ftg}$ $\quad B_2 = 6.333\ ft$

$A := B_1 \cdot B_2$ $\quad A = 6.333\ ft^2$

Moment at mid-width of footing:

$$M := \left(\begin{array}{l} \frac{1}{2} \cdot \gamma_{EFP\_a} \cdot b_{nom} \cdot \left(h_{heel\_soil}\right)^2 \cdot \left(\frac{h_{heel\_soil}}{3}\right) \\ + p_{super} \cdot \frac{\gamma_{EFP\_a}}{\gamma_{soil}} \cdot \left(h_{heel\_soil}\right) \cdot b_{nom} \cdot \left(\frac{h_{heel\_soil}}{2}\right) \\ + \frac{0 \cdot -1}{2} \cdot \gamma_{EFP\_p} \cdot b_{nom} \cdot \left(h_{toe\_soil} + t_{ftg}\right)^2 \cdot \left(\frac{h_{toe\_soil}}{3}\right) \\ + P_{hor} \cdot \left(t_{ftg} + h_{hor}\right) + P_{toe\_soil} \cdot \left(\frac{l_{ftg}}{2} - \frac{l_{toe}}{2}\right) + \left(P_{wall} + \omega_1 \cdot b_{nom}\right) \cdot \left(\frac{l_{ftg}}{2} - l_{toe} - \frac{t_{wall}}{2}\right) \\ + -P_{heel\_soil} \cdot \left(\frac{l_{ftg}}{2} - \frac{l_{heel}}{2}\right) \end{array} \right)$$

$M = 3.557\ ft \cdot kips$

Eccentricity of soil pressure resultant:

$e := \frac{M}{P_{total}}$ $\quad e = 0.456\ ft$ $\quad \frac{B_2}{6} = 1.056\ ft$

Maximum soil pressures:

$$q_{max\_prime} := \begin{cases} \left(\frac{P_{total}}{A} \cdot \left(1 + \frac{6 \cdot e}{B_2}\right)\right) & \text{if } e \le \frac{B_2}{6} \\ \frac{2 \cdot P_{total}}{3 \cdot A \cdot \left(0.5 - \frac{e}{B_2}\right)} & \text{else} \end{cases}$$

$q_{max\_prime} = 1765\ psf$

$q_{max\_prime} < q_{all\_brg} = 1$

$$q_{min\_prime} := \begin{cases} \left(\frac{P_{total}}{A} \cdot \left(1 - \frac{6 \cdot e}{B_2}\right)\right) & \text{if } e \le \frac{B_2}{6} \\ 0 \cdot psf & \text{else} \end{cases}$$

$q_{min\_prime} = 701\ psf$

Forces in wall at the base of wall:

$$M_{wall} := \left(\frac{1}{2} \cdot \gamma_{EFP\_a} \cdot b_{nom} \cdot \left(h_{heel\_soil}\right)^2 \cdot \frac{h_{heel\_soil}}{3} + p_{super} \cdot \frac{\gamma_{EFP\_a}}{\gamma_{soil}} \cdot \left(h_{heel\_soil}\right) \cdot b_{nom} \cdot \left(\frac{h_{heel\_soil}}{2}\right) + P_{hor} \cdot \left(h_{hor}\right)\right)$$

$$V_{wall} := \left(\frac{1}{2} \cdot \gamma_{EFP\_a} \cdot b_{nom} \cdot \left(h_{heel\_soil}\right)^2 + p_{super} \cdot \frac{\gamma_{EFP\_a}}{\gamma_{soil}} \cdot \left(h_{heel\_soil}\right) \cdot b_{nom} + P_{hor}\right)$$

$1.6 \cdot M_{wall} = 10.108\ ft \cdot kips$

$1.6 \cdot V_{wall} = 2.97\ kips$

$$M_{footing} := P_{heel\_soil} \cdot \frac{l_{heel}}{2} + p_{super} \cdot b_{nom} \cdot \frac{l_{heel}^2}{2}$$

$M_{footing} = 14.591\ ft \cdot kips$ $\quad 1.6 \cdot M_{footing} = 23.346\ ft \cdot kips$

Reinforced concrete retaining wall design:

Loads and geometry:

Factored moment: $M_u := 1.6 \cdot M_{wall}$ $\quad M_u = 10.1\ ft \cdot kips$

Factored shear force: $V_u := 1.6 \cdot V_{wall}$ $\quad V_u = 3\ kips$

Slab strip width: $b := b_{nom}$

Wall thickness: $h := t_{wall}$

Cover to reinforcing: $d_{cg} := 4 \cdot in$

Depth to reinforcing: $d := h - d_{cg}$ $\quad d = 4\ in$

Material properties / Design parameters:

Strength reduction factors: Bending: $\phi_b := 0.9$

Shear: $\phi_v := 0.75$

Concrete compressive strength: $f_{c\_p} := 4 \cdot ksi$

Steel yield strength: $f_y := 60 \cdot ksi$

Whitney stress block depth ratio:

$$\beta_1 := \begin{cases} 0.85 & \text{if } f_{c\_p} \le 4 \cdot ksi \\ \left(0.85 - 0.05 \cdot \left(f_{c\_p} \cdot ksi^{-1} - 4\right)\right) & \text{else} \end{cases}$$

Minimum flexural reinforcing:

$\rho_{min} := 200 \cdot f_y^{-1} \cdot psi$ $\quad \rho_{min} = 0.0033$

Maximum flexural reinforcing:

$$\rho_{max} := 0.75 \cdot \left(\frac{0.85 \cdot \beta_1 \cdot f_{c\_p}}{f_y} \cdot \frac{87 \cdot ksi}{87 \cdot ksi + f_y}\right)$$

$$\rho_{max} = 0.0214$$

Flexural design:

Required area of reinforcing: $A_{s\_reqd} = 0.64\ in^2$

Area of flexural reinforcing:

$BarArea := 0.31 \cdot in^2$

$Spacing := 4 \cdot in$ $\quad A_s := BarArea \cdot \frac{b}{Spacing}$ $\quad A_s = 0.93\ in^2$

Reinforcing ratio: $\rho := \frac{A_s}{b \cdot d}$ $\quad \rho = 0.0194$

Compression block depth:

$$a := \frac{A_s \cdot f_y}{0.85 \cdot f_{c\_p} \cdot b} \qquad a = 1.368\ in$$

Moment capacity:

$$\phi M_n := \phi_b \cdot \left(A_s \cdot f_y \cdot \left(d - \frac{a}{2}\right)\right) \qquad \phi M_n = 13.9\ ft \cdot kips$$

Shear design:

Area of shear reinforcing: $A_v := 0 \cdot in^2$

Spacing of stirrups: $s := 12 \cdot in$

Concrete shear capacity:

$$V_c := 2 \cdot \sqrt{f_{c\_p} \cdot psi} \cdot b \cdot d \qquad V_c = 6.1\ kips$$

Steel shear capacity: $V_s := \frac{A_v \cdot f_y \cdot d}{s}$

$V_s = 0\ kips$

Shear capacity:

$$\phi V_n := \phi_v \cdot \left(V_c + V_s\right) \qquad \phi V_n = 4.6\ kips$$

$M_u < \phi M_n = 1$ $\quad \rho < \rho_{max} = 1$

$V_u < \phi V_n = 1$ $\quad z = 172\ \frac{kips}{in}$

Reinforced concrete retaining wall footing design:

Loads and geometry:

Factored moment: $M_u := 1.6 \cdot M_{footing}$

$M_u = 23.346\ ft \cdot kips$

Slab strip width: $b := 12 \cdot in$

Live to dead load ratio: $LLDLRatio := 3.5$

Wall thickness: $h := t_{ftg}$

Cover to reinforcing: $d_{cg} := 3.25 \cdot in$

Depth to reinforcing: $d := h - d_{cg}$ $\quad d = 8.75\ in$

Material properties / Design parameters:

Strength reduction factors: Bending: $\phi_b := 0.9$

Shear: $\phi_v := 0.85$

Concrete compressive strength: $f_{c\_p} := 4 \cdot ksi$

Steel yield strength: $f_y := 60 \cdot ksi$

Whitney stress block depth ratio:

$$\beta_1 := \begin{cases} 0.85 & \text{if } f_{c\_p} \le 4 \cdot ksi \\ \left(0.85 - 0.05 \cdot \left(f_{c\_p} \cdot ksi^{-1} - 4\right)\right) & \text{else} \end{cases}$$

Minimum flexural reinforcing:

$\rho_{min} := 200 \cdot f_y^{-1} \cdot psi$ $\quad \rho_{min} = 0.0033$

Maximum flexural reinforcing:

$$\rho_{max} := 0.75 \cdot \left(\frac{0.85 \cdot \beta_1 \cdot f_{c\_p}}{f_y} \cdot \frac{87 \cdot ksi}{87 \cdot ksi + f_y}\right)$$

$\rho_{max} = 0.0214$

Flexural design:

Required area of reinforcing: $A_{s\_reqd} = 0.63\ in^2$

WITHIN 5% - SAY OK

Area of flexural reinforcing:

$BarArea := 0.31 \cdot in^2$

$Spacing := 6 \cdot in$ $\quad A_s := BarArea \cdot \frac{b}{Spacing}$ $\quad A_s = 0.62\ in^2$

Reinforcing ratio: $\rho := \frac{A_s}{b \cdot d}$ $\quad \rho = 0.0059$

Compression block depth:

$a := \frac{A_s \cdot f_y}{0.85 \cdot f_{c\_p} \cdot b}$ $\quad a = 0.912\ in$

Moment capacity:

$\phi M_n := \phi_b \cdot \left(A_s \cdot f_y \cdot \left(d - \frac{a}{2}\right)\right)$ $\quad \phi M_n = 23.1\ ft \cdot kips$

$M_u < \phi M_n = 0$ $\quad \rho < \rho_{max} = 1$

$V_u < \phi V_n = 1$ $\quad z = 219\ \frac{kips}{in}$

Sheet No.:_____

Project: St. Helens - Riverwalk - Retaining Wall
Project No.: 20028
Client:
Subject:

Engineer: SC
File: Ret-Wall_9.5-ft_EQ.mcdx
Date:
Rev.:

Retaining wall analysis and design

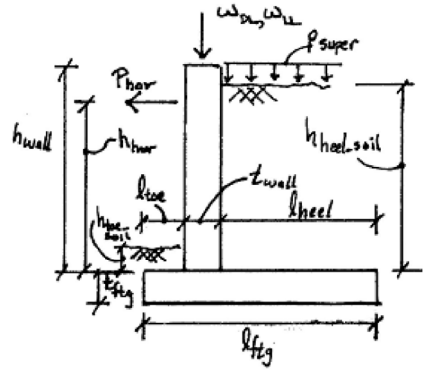

Material properties:

$\gamma_{conc} := 135 \cdot pcf$

$\gamma_{soil} := 108 \cdot pcf$

$\gamma_{EFP\_a} := 35 \cdot pcf$

$\gamma_{EFP\_p} := 250 \cdot pcf$

$\mu_{sliding} := .40$

$q_{all\_brg} := 3000 \cdot psf$

$FS := 1.1$

Loading on wall:

$h_{heel\_soil} := 9 \cdot ft + 6 \cdot in$

$h_{toe\_soil} := 12 \cdot in$

$p_{super} := 0.0 \cdot psf$

$\omega_{DL\_super} := 0.0 \cdot klf$

$\omega_{LL\_super} := 0.0 \cdot klf$

$P_{hor} := 0.632 \cdot kips$

$h_{hor} := 5.70 \cdot ft$

Wall geometry:

$h_{wall} := 9 \cdot ft + 6 \cdot in$

$t_{wall} := 8 \cdot in$

$p_{wall} := 90 \cdot psf$

$h_{key} := 0 \cdot in$

$l_{key} := 0 \cdot in$

$t_{ftg} := 1 \cdot ft + 0 \cdot in$

$l_{toe} := 1 \cdot ft + 0 \cdot in$

$l_{ftg} := 6 \cdot ft + 4 \cdot in$

$l_{heel} := l_{ftg} - l_{toe} - t_{wall}$

$l_{heel} = 4.667\ ft$

$b_{nom} := 1 \cdot ft$

$\omega_1 := \omega_{DL\_super} + \omega_{LL\_super}$ $\qquad \omega_1 = 0\ \frac{kips}{ft}$

$P_{ftg} := \gamma_{conc} \cdot (l_{ftg} \cdot t_{ftg} + l_{key} \cdot h_{key}) \cdot b_{nom}$ $\qquad P_{ftg} = 0.855\ kips$

$P_{wall} := p_{wall} \cdot h_{wall} \cdot b_{nom}$ $\qquad P_{wall} = 0.855\ kips$

$P_{heel\_soil} := (\gamma_{soil} \cdot h_{heel\_soil} + p_{super}) \cdot l_{heel} \cdot b_{nom}$ $\qquad P_{heel\_soil} = 4.788\ kips$

$P_{toe\_soil} := \gamma_{soil} \cdot h_{toe\_soil} \cdot l_{toe} \cdot b_{nom}$ $\qquad P_{toe\_soil} = 0.108\ kips$

$P_{total} := P_{ftg} + P_{wall} + P_{heel\_soil} + P_{toe\_soil} + \omega_1 \cdot b_{nom}$ $\qquad P_{total} = 6.606\ kips$

$$M_{OT} := \left(\frac{1}{2} \cdot \gamma_{EFP\_a} \cdot b_{nom} \cdot (h_{heel\_soil} + t_{ftg})^2 \cdot \left(\frac{t_{ftg} + h_{heel\_soil}}{3} \right) + p_{super} \cdot \frac{\gamma_{EFP\_a}}{\gamma_{soil}} \cdot (h_{heel\_soil} + t_{ftg}) \cdot b_{nom} \cdot \left(\frac{t_{ftg} + h_{heel\_soil}}{2} \right) + P_{hor} \cdot (t_{ftg} + h_{hor}) \right) \cdot FS$$

$M_{OT} = 12.086\ ft \cdot kips$

$$M_{OT\_resisting} := P_{ftg} \cdot \frac{l_{ftg}}{2} + P_{wall} \cdot \left(l_{toe} + \frac{t_{wall}}{2} \right) + \omega_1 \cdot b_{nom} \cdot \left(l_{toe} + \frac{t_{wall}}{2} \right) + P_{heel\_soil} \cdot \left(l_{ftg} - \frac{l_{heel}}{2} \right) + P_{toe\_soil} \cdot \frac{l_{toe}}{2}$$

$M_{OT\_resisting} = 23.054\ ft \cdot kips$

$$H_{sliding} := \left(\frac{1}{2} \cdot \gamma_{EFP\_a} \cdot b_{nom} \cdot \left(h_{heel\_soil} + h_{key} + t_{ftg}\right)^2 + p_{super} \cdot \frac{\gamma_{EFP\_a}}{\gamma_{soil}} \cdot b_{nom} \cdot \left(h_{heel\_soil} + h_{key} + t_{ftg}\right) + P_{hor} \right) \cdot FS$$

$H_{sliding} = 2.818\ kips$

$$H_{resisting} := \left(P_{ftg} + P_{wall} + P_{heel\_soil} + 0 \cdot P_{toe\_soil} + \omega_1 \cdot b_{nom}\right) \cdot \mu_{sliding} + \frac{1}{2} \cdot \gamma_{EFP\_p} \cdot b_{nom} \cdot \left(\left(h_{toe\_soil} + t_{ftg} + h_{key}\right)^2 - h_{toe\_soil}^{\ 2}\right)$$

$H_{resisting} = 2.974\ kips$

<u>Soil pressures due to gravity and overturning forces:</u>

Footing size: $B_1 := b_{nom}$ $\quad B_1 = 1\ ft$

$B_2 := l_{ftg}$ $\quad B_2 = 6.333\ ft$

$A := B_1 \cdot B_2$ $\quad A = 6.333\ ft^2$

Moment at mid-width of footing:

$$M := \left(\begin{array}{l} \frac{1}{2} \cdot \gamma_{EFP\_a} \cdot b_{nom} \cdot \left(h_{heel\_soil}\right)^2 \cdot \left(\frac{h_{heel\_soil}}{3}\right) \\ + p_{super} \cdot \frac{\gamma_{EFP\_a}}{\gamma_{soil}} \cdot \left(h_{heel\_soil}\right) \cdot b_{nom} \cdot \left(\frac{h_{heel\_soil}}{2}\right) \\ + \frac{0 \cdot -1}{2} \cdot \gamma_{EFP\_p} \cdot b_{nom} \cdot \left(h_{toe\_soil} + t_{ftg}\right)^2 \cdot \left(\frac{h_{toe\_soil}}{3}\right) \\ + P_{hor} \cdot \left(t_{ftg} + h_{hor}\right) + P_{toe\_soil} \cdot \left(\frac{l_{ftg}}{2} - \frac{l_{toe}}{2}\right) + \left(P_{wall} + \omega_1 \cdot b_{nom}\right) \cdot \left(\frac{l_{ftg}}{2} - l_{toe} - \frac{t_{wall}}{2}\right) \\ + -P_{heel\_soil} \cdot \left(\frac{l_{ftg}}{2} - \frac{l_{heel}}{2}\right) \end{array} \right)$$

$M = 7.101\ ft \cdot kips$

Eccentricity of soil pressure resultant:

$e := \frac{M}{P_{total}}$ $\quad e = 1.075\ ft$ $\quad \frac{B_2}{6} = 1.056\ ft$

Maximum soil pressures:

$$q_{max\_prime} := \begin{cases} \left(\frac{P_{total}}{A} \cdot \left(1 + \frac{6 \cdot e}{B_2}\right)\right) & \text{if } e \le \frac{B_2}{6} \\ \frac{2 \cdot P_{total}}{3 \cdot A \cdot \left(0.5 - \frac{e}{B_2}\right)} & \text{else} \end{cases}$$

$q_{max\_prime} = 2105\ psf$

$q_{max\_prime} < q_{all\_brg} = 1$

$$q_{min\_prime} := \begin{cases} \left(\frac{P_{total}}{A} \cdot \left(1 - \frac{6 \cdot e}{B_2}\right)\right) & \text{if } e \le \frac{B_2}{6} \\ 0 \cdot psf & \text{else} \end{cases}$$

$q_{min\_prime} = 0\ psf$

Forces in wall at the base of wall:

$$M_{wall} := \left(\frac{1}{2} \cdot \gamma_{EFP\_a} \cdot b_{nom} \cdot \left(h_{heel\_soil}\right)^2 \cdot \frac{h_{heel\_soil}}{3} + p_{super} \cdot \frac{\gamma_{EFP\_a}}{\gamma_{soil}} \cdot \left(h_{heel\_soil}\right) \cdot b_{nom} \cdot \left(\frac{h_{heel\_soil}}{2}\right) + P_{hor} \cdot \left(h_{hor}\right)\right)$$

$$V_{wall} := \left(\frac{1}{2} \cdot \gamma_{EFP\_a} \cdot b_{nom} \cdot \left(h_{heel\_soil}\right)^2 + p_{super} \cdot \frac{\gamma_{EFP\_a}}{\gamma_{soil}} \cdot \left(h_{heel\_soil}\right) \cdot b_{nom} + P_{hor}\right)$$

$1.6 \cdot M_{wall} = 13.766\ ft \cdot kips$

$1.6 \cdot V_{wall} = 3.538\ kips$

$$M_{footing} := P_{heel\_soil} \cdot \frac{l_{heel}}{2} + p_{super} \cdot b_{nom} \cdot \frac{l_{heel}^2}{2}$$

$M_{footing} = 11.172\ ft \cdot kips$

$1.6 \cdot M_{footing} = 17.875\ ft \cdot kips$

Reinforced concrete retaining wall design:

Loads and geometry:

Factored moment: $M_u := 1.6 \cdot M_{wall}$ $\quad M_u = 13.8\ ft \cdot kips$

Factored shear force: $V_u := 1.6 \cdot V_{wall}$ $\quad V_u = 3.5\ kips$

Slab strip width: $b := b_{nom}$

Wall thickness: $h := t_{wall}$

Cover to reinforcing: $d_{cg} := 4 \cdot in$

Depth to reinforcing: $d := h - d_{cg}$ $\quad d = 4\ in$

Material properties / Design parameters:

Strength reduction factors: Bending: $\phi_b := 0.9$

Shear: $\phi_v := 0.75$

Concrete compressive strength: $f_{c\_p} := 4 \cdot ksi$

Steel yield strength: $f_y := 60 \cdot ksi$

Whitney stress block depth ratio:

$$\beta_1 := \begin{cases} 0.85 & \text{if } f_{c\_p} \le 4 \cdot ksi \\ \left(0.85 - 0.05 \cdot \left(f_{c\_p} \cdot ksi^{-1} - 4\right)\right) & \text{else} \end{cases}$$

Minimum flexural reinforcing:

$\rho_{min} := 200 \cdot f_y^{-1} \cdot psi$ $\quad \rho_{min} = 0.0033$

Maximum flexural reinforcing:

$$\rho_{max} := 0.75 \cdot \left(\frac{0.85 \cdot \beta_1 \cdot f_{c\_p}}{f_y} \cdot \frac{87 \cdot ksi}{87 \cdot ksi + f_y}\right)$$

$$\rho_{max} = 0.0214$$

Flexural design:

Required area of reinforcing: $A_{s\_reqd} = 0.92\ in^2$

Area of flexural reinforcing:

$BarArea := 0.31 \cdot in^2$

$Spacing := 4 \cdot in$ $\quad A_s := BarArea \cdot \frac{b}{Spacing}$ $\quad A_s = 0.93\ in^2$

Reinforcing ratio: $\rho := \frac{A_s}{b \cdot d}$ $\quad \rho = 0.0194$

Compression block depth:

$$a := \frac{A_s \cdot f_y}{0.85 \cdot f_{c\_p} \cdot b} \qquad a = 1.368\ in$$

Moment capacity:

$$\phi M_n := \phi_b \cdot \left(A_s \cdot f_y \cdot \left(d - \frac{a}{2}\right)\right) \qquad \phi M_n = 13.9\ ft \cdot kips$$

Shear design:

Area of shear reinforcing: $A_v := 0 \cdot in^2$

Spacing of stirrups: $s := 12 \cdot in$

Concrete shear capacity:

$$V_c := 2 \cdot \sqrt{f_{c\_p} \cdot psi} \cdot b \cdot d \qquad V_c = 6.1\ kips$$

Steel shear capacity: $V_s := \frac{A_v \cdot f_y \cdot d}{s}$

$V_s = 0\ kips$

Shear capacity:

$$\phi V_n := \phi_v \cdot \left(V_c + V_s\right) \qquad \phi V_n = 4.6\ kips$$

$M_u < \phi M_n = 1$ $\quad \rho < \rho_{max} = 1$

$V_u < \phi V_n = 1$ $\quad z = 235\ \frac{kips}{in}$

Reinforced concrete retaining wall footing design:

Loads and geometry:

Factored moment: $M_u := 1.6 \cdot M_{footing}$

$M_u = 17.875\ ft \cdot kips$

Slab strip width: $b := 12 \cdot in$

Live to dead load ratio: $LLDLRatio := 3.5$

Wall thickness: $h := t_{ftg}$

Cover to reinforcing: $d_{cg} := 3.25 \cdot in$

Depth to reinforcing: $d := h - d_{cg}$ $\quad d = 8.75\ in$

Material properties / Design parameters:

Strength reduction factors: Bending: $\phi_b := 0.9$

Shear: $\phi_v := 0.85$

Concrete compressive strength: $f_{c\_p} := 4 \cdot ksi$

Steel yield strength: $f_y := 60 \cdot ksi$

Whitney stress block depth ratio:

$$\beta_1 := \begin{cases} 0.85 & \text{if } f_{c\_p} \le 4 \cdot ksi \\ \left(0.85 - 0.05 \cdot \left(f_{c\_p} \cdot ksi^{-1} - 4\right)\right) & \text{else} \end{cases}$$

Minimum flexural reinforcing:

$\rho_{min} := 200 \cdot f_y^{-1} \cdot psi$ $\quad \rho_{min} = 0.0033$

Maximum flexural reinforcing:

$$\rho_{max} := 0.75 \cdot \left(\frac{0.85 \cdot \beta_1 \cdot f_{c\_p}}{f_y} \cdot \frac{87 \cdot ksi}{87 \cdot ksi + f_y}\right)$$

$\rho_{max} = 0.0214$

Flexural design:

Required area of reinforcing: $A_{s\_reqd} = 0.47\ in^2$

Area of flexural reinforcing:

$BarArea := 0.31 \cdot in^2$

$Spacing := 6 \cdot in$ $\quad A_s := BarArea \cdot \frac{b}{Spacing}$ $\quad A_s = 0.62\ in^2$

Reinforcing ratio: $\rho := \frac{A_s}{b \cdot d}$ $\quad \rho = 0.0059$

Compression block depth:

$a := \frac{A_s \cdot f_y}{0.85 \cdot f_{c\_p} \cdot b}$ $\quad a = 0.912\ in$

Moment capacity:

$\phi M_n := \phi_b \cdot \left(A_s \cdot f_y \cdot \left(d - \frac{a}{2}\right)\right)$ $\quad \phi M_n = 23.1\ ft \cdot kips$

$M_u < \phi M_n = 1$ $\quad \rho < \rho_{max} = 1$

$V_u < \phi V_n = 1$ $\quad z = 168\ \frac{kips}{in}$